August 1994 • NREL/TP-425-20245

Maintenance and Operation of the U.S. DOE Alternative Fuel Center

J. Erwin
J.L. Ferrill
D.L. Hetrick
Southwest Research Institute
San Antonio, Texas

National Renewable Energy Laboratory
1617 Cole Boulevard
Golden, Colorado 80401-3393
A national laboratory of the U.S. Department of Energy
Managed by Midwest Research Institute
for the U.S. Department of Energy
under Contract No. DE-AC36-83CH10093

NREL/TP-425-20245 • UC Category: 1504 • DE95013146

Maintenance and Operation of the U.S. DOE Alternative Fuel Center

J. Erwin
J.L. Ferrill
D.L. Hetrick
Southwest Research Institute
San Antonio, Texas

NREL technical monitor:
B. Bailey

National Renewable Energy Laboratory
1617 Cole Boulevard
Golden, Colorado 80401-3393
A national laboratory of the U.S. Department of Energy
Managed by the Midwest Research Institute
for the U.S. Department of Energy
Under Contract No. DE-AC36-83CH10093

Prepared under Subcontract No. XS-2-12130-1

August 1994

NOTICE

This report was prepared as an account of work sponsored by an agency of the United States government. Neither the United States government nor any agency thereof, nor any of their employees, makes any warranty, express or implied, or assumes any legal liability or responsibility for the accuracy, completeness, or usefulness of any information, apparatus, product, or process disclosed, or represents that its use would not infringe privately owned rights. Reference herein to any specific commercial product, process, or service by trade name, trademark, manufacturer, or otherwise does not necessarily constitute or imply its endorsement, recommendation, or favoring by the United States government or any agency thereof. The views and opinions of authors expressed herein do not necessarily state or reflect those of the United States government or any agency thereof.

Available to DOE and DOE contractors from:
Office of Scientific and Technical Information (OSTI)
P.O. Box 62
Oak Ridge, TN 37831
Prices available by calling (615) 576-8401

Available to the public from:
National Technical Information Service (NTIS)
U.S. Department of Commerce
5285 Port Royal Road
Springfield, VA 22161
(703) 487-4650

Printed on paper containing at least 50% wastepaper, including 10% postconsumer waste

Executive Summary

Program Title: **Maintenance and Operation of the U.S. DOE Alternative Fuel Center**

Sponsor: National Renewable Energy Laboratory

Contract Number: XS-2-12130-1

Project Number: 01-5151

Inclusive Dates: August 5, 1993 - August 4, 1994

Publications: Erwin, J., "Vapor Pressure Interactions of Ethanol with Butane and Pentane in Gasoline," Presented at "Symposium on Oxygenates as Fuel Additives," ACS National Meeting, San Diego, CA., March 1994.

Technical Objectives

Five tasks were defined for work in the Alternative Fuels Utilization Program (AFUP) to enhance the quality of alternative fuels and improve the utility and value of U.S. energy sources:

Task 1: Facility maintenance for the Alternative Fuel Center (AFC) of the Office of Energy Efficiency and Renewable Energy at Southwest Research Institute

Task 2: Facility upgrade: control system and hydrogen recycle flowmeter

Task 3: Other government research

Task 4: Industry research (on a noninterference basis)

Task 5: Safety and health compliance

Approach

In year one of this contract, a timeline was established to coordinate uses and operations of the AFC hydrogenation pilot plant among test fuels production project work, facility maintenance, other government work, and work for industry for second-year operations. In year two, consistent with assisting the AFUP in accomplishing its general goals, the work was done with fuel producers, regulators, and users in mind. AFC capabilities and results were disseminated through tours and outside presentations.

Accomplishments

The facility upgrade constituted a significant portion of this year's pilot plant operating contract in time and cost. The hydrogenation pilot plant was constructed 11 years ago by Xytel Corporation (Xytel). Because the computer and control hardware and software were no longer supported by their manufacturers, the pilot plant was experiencing more frequent and serious service interruptions that arose from the control system. For these reasons, an upgrade of the system was necessary. Xytel was selected to perform the facility upgrade because of its experience with the original construction of the pilot plant.

Completion of the facility upgrade included operator training on the new software, FIXDMACS™ by Intellution, and fine tuning of computer programs and modifications. Xytel provided equipment and operation documentation for the facility upgrade. For the first 5 months, the new control system's operation has been good and effectiveness of operations is much improved.

Hydrotreater maintenance was achieved through selected repairs on this project and diligent upkeep on outside projects. Minor equipment components were also purchased for the control system.

Work for other government programs and industry is shown below. In addition to the new alternative fuels knowledge produced this year by the AFC project, use of the AFC by other government agencies and industries for outside projects has contributed to better fuels and alternative fuel sources. This testifies to the widespread interest and value of both the AFUP and the AFC.

Utilization of the AFC by Industries and Government Agencies

User or Fuel Recipient	AFC Activity[a]	Type of Fuel[b]	Objectives
Commercial 1	H,B	D	Develop a diesel reference fuel for reduced exhaust emissions (California regulations)
Commercial 2	H,B	D	Develop an emissions-reducing diesel fuel and reference fuel (California regulations)
DOE Office of Energy Efficiency and Renewable Energy	D,B	G	Reid vapor pressure study completion
DOE Office of Fossil Energy	D	D	Ignition quality, Fischer-Tropsch fuels completion
Commercial 3	B	D	Reference and test fuels for reduced emissions (California regulations)
0DOE Office of Energy Efficiency and Renewable Energy	D	D	Diesel fuel assay of performance and emissions
DOE Pittsburgh Energy Technology Center	H,D,B	C	End-use study of coal liquids

[a] Type of activity: H=hydrotreating, D=distillation, B=blending
[b] Type of fuel: D=diesel, G=gasoline, C=coal liquid

Contents

Page

Executive Summary i

Introduction 1

Task 1: Facility Maintenance 7

Task 2: Facility Upgrade 11

Tasks 3 and 4: Other Government and Industry Research 14
Test Fuels Produced 17
Visitors and Tours 19

Task 5: Health and Safety Compliance 20

Conclusions 21

Exhibit 1. Index of Monthly Progress Reports 22

Exhibit 2. Annual Government Property Inventory 25

Exhibit 3. Description of Facilities 30

Exhibit 4. Bibliography of AFC Publications 33

Exhibit 5. Program Synopses of AFC Projects 36

List of Tables

Page

Table 1. Succession of AFUP Projects 3
Table 2. Summary of Synthetic Fuel Center Monthly Log 8
Table 3. Hydrotreater Maintenance 9
Table 4. AFC Fuels and Fuel Components in Storage 10
Table 5. Utilization of the AFC by Industries and Government Agencies 14
Table 6. Test Fuels Produced at the AFC 18
Table 7. Tours and Visits to DOE Alternative Fuel Center 19

Introduction

The Synthetic Fuel Center (SFC) was established by the U.S. Department of Energy (DOE) as part of the Alternative Fuels Utilization Program (AFUP) to provide drum quantities of finished transportation fuels from a variety of sources. Since 1978, the AFUP of the Office of Energy Efficiency and Renewable Energy has investigated the possibilities and limitations of expanded scope of fuel alternatives and replacement means for transportation fuels from alternative sources to complement conventional petroleum fuels. The main function was to provide test fuels in 5- to 500-gallon quantities for research projects on the utilization of alternative fuels.

DOE funded the design, construction, and installation of a hydrogenation pilot plant capable of performing a range of hydrotreating, reforming, and hydrocracking operations. Southwest Research Institute (SwRI) provided the building, utilities, and laboratory and safety systems needed for the pilot plant. Later, the U.S. Navy provided a pilot-scale continuous distillation unit, and SwRI provided batch distillation equipment, which are conveniently housed in the same building as the hydrotreater pilot plant, but are not formally part of the Alternative Fuel Center (AFC). A schematic drawing of the hydrogenation unit is shown in Figure 1.

The following paragraphs present a history of programs and work accomplished at the hydrogenation pilot plant. Table 1 presents the chronology of the succeeding contracts for the work of the AFUP at the AFC. Exhibit 4 presents a bibliography of the reports and publications from the AFC work.

The AFC was created to solve problems identified in two DOE programs which were grappling with the utilization of shale oil and coal liquids for transportation fuels. By analysis of the new starting materials being produced at the time from oil shale and coal, the projects were creating a data base for use by refinery models to predict the composition, properties, and performance of automotive fuels with *synthetic components*, hence the early name, Synthetic Fuel Center. The proof-of-concept stage of these investigations was performed with blends of petroleum stocks and principally straightrun shale and coal liquid stocks.

Although informative, these studies clearly identified the need for synthetic stocks that were adequately refined, in the manner of petroleum stocks, to cure the identified deficiencies and permit comparisons on a common basis. Operations of distillation, desulfurization, denitrification, aromatics saturation, and catalytic reforming were identified as the most needed. Inquiries for processing in drum quantities from active centers of these processes gave cost estimates in the $10,000/gallon range. It became apparent that a dedicated pilot plant to serve the DOE program would quickly prove cost effective. The advantage of a dedicated unit would also be seen in control over the processing and schedule.

From 1982 to 1985, a program was implemented for the storage, processing, inspection and analysis of petroleum products, including unfinished fuels, blends, and synfuels to fulfill the needs of the AFUP. The central component of the work was a hydrogenation pilot plant with flexibility to perform hydrocracking and reforming as well. SwRI prepared a detailed process design and put it out for bids. Of the three received, the best offering was from Xytel, which was chosen to construct the unit.

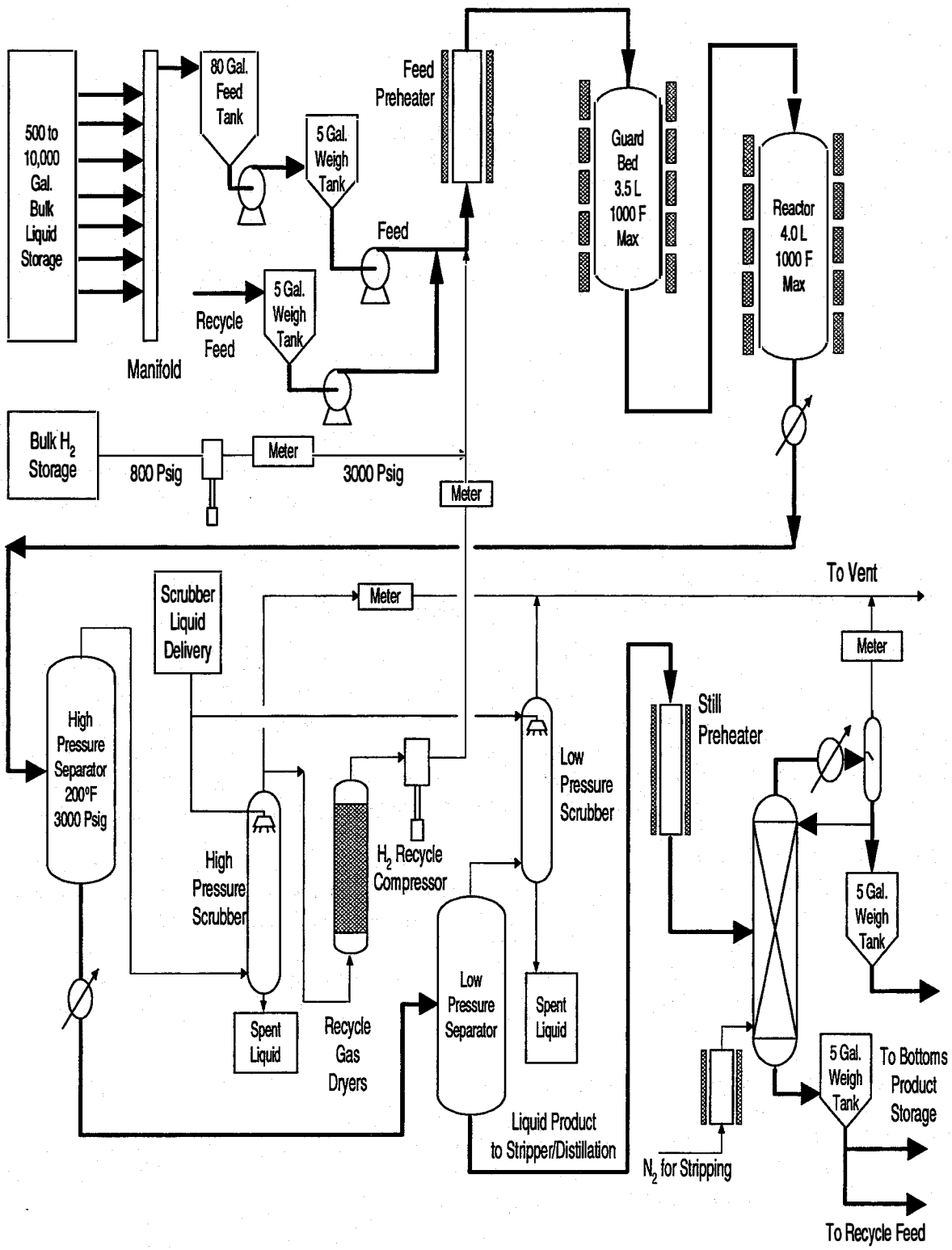

Figure 1. Hydrogenation Unit Process Schematic.

Table 1. Succession of AFUP Projects

Dates	Contract Organization	Project Title	Contract Number	Project Number	No. Pubs
08/05/92-08/04/93	National Renewable Energy Laboratory	Maintenance and Operation of the U.S. DOE Alternative Fuel Center	XS-2-12130-1	03-5151	3
11/25/91-08/25/93	Midwest Research Institute/ National Renewable Energy Laboratory	Diesel Fuel Component Contribution to Engine Emissions and Performance	YZ-2-11215-1	03-4764	8
01/91-12/92	National Renewable Energy Laboratory	Vapor Pressure Interactions of Ethanol with Butane and Pentane	BN-1-10134-1	03-4089-501	1
11/90-12/91	National Renewable Energy Laboratory	Processing and Analysis of Diesel Fuel Fractions	BN-1-10134-1	03-4089-330	1
11/85-12/87	Martin Marietta Energy Systems, Inc./Oak Ridge National Laboratory for U.S. Dept. of Energy	Synthetic Fuel Center Operations	86X-22027C	02-8929	3
10/85-01/86	Martin Marietta Energy Systems	Hydrogenation of Caustic-Washed Exxon Donor Solvent	37Y-52303V	02-8898	1
06/82-09/85	U.S. Department of Energy/Office of Vehicle and Engine Research and Development	Storage, Processing, Inspection, and Analysis of Petroleum Products Including Unfinished Fuels, Blends, and Synfuels	DEAC01-84CE-50070	02-7117	2
09/79-09/82	U.S. Department of Energy	Refining Studies and Engine Testing of Alternative Highway Transportation Fuels	AC01-79CS-50017	10-5640	2
09/76-02/78	U.S. Department of Energy	Identification of Probable Automotive Fuels Composition: 1985-2000	EY-76-C-04-3684	10-4658	3

To accomplish experimental objectives, each test fuel was uniquely prepared and studied. The program's approach consisted of creating each fuel's property and composition targets while using stocks and techniques relevant to the current petroleum-refining industry.

Synthetic feedstocks were processed from shale oil and coal liquids, including Paraho, Exxon Donor Solvent (EDS) and Solvent Refined Coal-Process II (SCR-II) processes. The EDS and SRC-II were well developed coal liquefaction processes of their day. The moderate severity upgrading of shale oil was carried out for property improvement. Catalytic reforming of shale-derived naphthas at low pressure raised the octane of these paraffinic materials from less than 50 to above 90 Research Octane Number. Most test fuels required a blending step, which was performed by a rigorous technique. Fuel blending to target properties or compositions was a major activity. Complete characterizations were made of all feedstocks and products.

In the 3-year report period, 26 fuels were prepared for 11 projects. Quantities ranged from 50 to 200 gallons of each fuel; the total production was 2,490 gallons. Starting materials for processing or blending included two shale oils, two shale-derived naphthas, and two coal-derived middle distillates.

The achievement of making the first processing run on the new pilot plant to be reforming left hydrotreating work yet to be done. A small contract was made to prepare an EDS middle distillate for use in diesel blending. The feedstock was first caustic washed to remove phenolic compounds, then hydrogenated from 11 M% to 11.5 M%, producing a clear, stable product.

From 1985 to 1987, test fuels research was accomplished under a successor to the original SFC contract. Test fuels were made from sources including shale, coal, and petroleum stocks. Specific fuel property problems were relieved or desired compositions obtained by a combination of blending and processing. The primary processing operation was catalytic hydrogenation, which was augmented by distillation, stripping, filtration, and other unit operations. At all times, relevance to refinery practice and similarity to realistic fuel properties were maintained.

The test fuels made during the second contract segment of about 2 years' duration were more complex than in the first 3-year period and required more processing. Often multiple property adjustments were made (for example, a series of products made from EDS coal liquid included a middle distillate caustic-washed product, and hydrogenated products made by processing at low, medium, and high severity hydrogenation).

In all, 26 test fuels were prepared for 10 projects, resulting in about 2010 gallons of fuel. Many observations of product properties and processing conditions were made and reported during two contractor coordination meetings and a fuels roundtable. One of the clear questions emerging from the experimental work was, "How will the new fuel sources compare with petroleum fuels with respect to exhaust emissions?" A statement of work item of this time sought to *benchmark* typical diesel fuel components for this purpose.

An assay of selected diesel components was started in the prevailing SFC operating contract and advanced during a contract to acquire a straightrun diesel stock, a light cycle oil, and a light coker gas oil. The cracked stocks were chosen because they were expected to have the greatest effect on exhaust emissions. These materials began the analytical workup including fractional distillation into 6 to 8 narrow-boiling fractions each. At this time, new coal liquids became available from the Office of Fossil Fuels in the form of Fisher-Tropsch (FT) liquids and were added to the program. This emergence of new fuel sources created an updated name for the laboratory, the AFC.

The contract for the preparation of the diesel fuel stocks was followed by one for the detailed testing and statistical evaluation of the results. This was extensive, meticulous work that continued for 3 years, resulting in a thorough *assay* of the stocks giving rise to the project's nickname, the Diesel Fuel Assay. The culmination of this effort was the application of the property versus exhaust composition correlations to the blending of a family of minimum emissions test fuels for evaluation. The need for *a family* of such fuels recognized the varied views of the future that must take into account both aromatics concentration and cetane number in pollution control. The role of the FT liquids was varied also, increasing the number of final test fuels.

For the current contract in the 1992 through 1995 time frame, program activities consist of the maintenance and operation of the AFC. The influence of fuel reformulation for emissions reduction has been the major theme, and the activities of workers outside the AFUP who have need for the capabilities of the AFC have been emphasized. Work for the first year of the contract, 1992-1993, was accomplished under the following four tasks:

Task 1: Facility maintenance: hydrotreater maintenance was achieved through selected repairs which were used for preparation of low-sulfur, low-olefin cracked gasoline blendstock

Task 2: Production of two test fuels: a) preparation of low-sulfur, low-olefin, catalytically cracked gasoline blendstock, and b) low-emission gasoline

Task 3: Other government research: five projects - a) two EPA studies, b) one NREL study, and c) two DOE projects

Task 4: Industry research: five projects - a) four oil companies, b) one Industrial Association Linear programming was also used to devise a "minimum emissions" gasoline from hydrocarbon sources which could be produced from alternative or conventional blendstocks.

This report covers the second year of the current contract. SFC objectives were accomplished under the following five tasks:

Task 1: Facility maintenance

Task 2: Facility upgrade

Task 3: Other government research

Task 4: Industry research

Task 5: Safety and health compliance.

The principal project this year was the computer control system upgrade, which involved acquisition and installation of the new hardware and software system. Control system modifications with fine tuning and training were required after installation.

Other objectives for the year consisted of performing research for several government and industry projects involving custom processing, blending, or analysis of experimental fuels. Ongoing maintenance of the AFC and safety and health compliance were additional goals for the year. Data compilation from the year one, low-reactivity/low-emission gasoline project and year-end report were part of this year's accomplishments.

Each of the five tasks are discussed in the following sections. A table summarizing the monthly progress reports is provided in Exhibit 1. The preceding projects are summarized in Exhibit 5 by way of program synopses for each one.

Task 1: Facility Maintenance

The AFC comprises of samples, structures, equipment, and the storage infrastructure on a specially diked work area spread over about an acre at SwRI. Descriptions of the facilities are provided in Exhibit 2 at the end of this report.

On May 28, 1993, NREL issued Modification No. 1 to the original NREL subcontract No. XS-2-12130-1. This modification authorized work on the project for the period August 1993 to August 1994. In addition, Modification No. 1 included a new Article 13 - Government Furnished Property through which the AFC property, totaling a value of $694,912, was transferred from the previous contract. SwRI prepares all required property reports and performs an annual physical inventory. A copy of the August 1994 property inventory is provided in Exhibit 3.

Modification No. 2 to the contract was issued on July 25, 1994, and contained Article 16, which identified the new capital equipment for the control system upgrade (in the amount of $35,000) and low value equipment in the amount of $3,500) for the recycle hydrogen flowmeter. This property actually consists of replacement components and, as such, is not detailed in the inventory.

Facility maintenance was extensive for operating year two. Upgrades to the computer control system are presented separately in the Task 2 section that follows.

During routine checks of government equipment, the project staff also examined building systems for proper function. Table 2 presents a summary of the findings during monthly inspections and equipment exercises. The principal finding was failure of building safety alarm systems. SwRI plans a system renovation or replacement, depending on the implementation of a recent reorganization.

Hydrotreater maintenance was achieved through selected repairs on the project and diligent upkeep during outside projects. Table 3 summarizes the hydrotreater maintenance log.

The hydrogen recycle flowmeter was replaced by a Rheotherm model with a 3/16-in. diameter tube for the sensing element. This element is less affected by moisture and condensate than the capillary tubing in the recycle flowmeter previously used. Its transmitter electronics were mounted in the direct current instrument interface box. As part of routine maintenance, moisture and condensate removal is accomplished by recycling gas through the meter in its vertical orientation.

The feed pump controller for the hydrotreater unit failed after the upgraded computer system was installed. During installation of a replacement controller, communications between computer control and the remote control electronics were lost, which resulted in damage to the Micromac™ boards, which are the original input/output (I/O) electronics boards for the pilot plant. This electronics failure resulted in significant costs and downtime for the pilot plant. The feed pump controller failure, however, did not affect the new control system, only the I/O system. The repair of the communication electronics included installing an optically isolated OPTOMUX™ system purchased to replace the defective part of the original I/O system.

Table 2. Summary of Synthetic Fuel Center Monthly Log Items Checked and Comments

Date	Fire and Smoke Alarms	Gas Alarms	Air and Water	Hydrogen and Lower Revetment[b]	Tanks[c]	Misc.[d]
09/93	1	2,3,4	✓	✓	✓	✓
10/93	1	2,3,4	✓	✓	✓	✓
11/93	1	2,3,4	✓	✓	✓	✓
12/93	1	2,3,4	✓	✓	✓	✓
01/94	1	2,3,4	✓	✓	✓	✓
02/94	1	2,3,4	✓	✓	✓	✓
03/94	1	2,3,4	✓	✓	✓	✓
04/94	1	2,3,4	✓	✓	✓	✓
05/94	1	2,3,4	✓	✓	✓	✓
06/94	1	2,3,4	✓	✓	✓	✓
07/94	1	2,3,4	✓	✓	✓	✓
08/94	1	2,3,4	✓	✓	✓	✓

a. Includes all filters
b. Includes drum sample storage
c. Includes piping and blending facility
d. Includes emergency lights, oil traps and other upper revetment equipment.

Comments:
1. Main bay smoke detector did not work
2. A combustible gas detector failed
3. A hydrogen sulfide detector failed
4. Hydrogen sensor failed

✓ Indicates equipment or system checked and/or verified.

Table 3. Hydrotreater Maintenance

Item	Date	Description	Cost
1	Oct 93	Replaced failed E to P transducer for make up hydrogen FC21A	350*
2	Oct 93	Rebuilt bottoms pump on reboiler P401, installed speed reducer	200*
3	Dec 93	Replaced FT21B recycle hydrogen flowmeter	2850
4	Dec 93	Process control computer replaced	35000
5	Jan 94	Rebuilt transfer pump TP2	250
6	Feb 94	Replaced leaky hand valve on manifold	140*
7	Mar 94	Installed reactor bypass and block and blee	3500*
8	Apr 94	Replaced HV73A on scrubber liquid tank	50*
9	May 94	Rebuilt leaky regulator PCV122	100*
10	May 94	Rebuilt level control valve LV71A	150*
11	May 94	Replaced leaking pressure gauge PI122	150*
12	Jun 94	Replaced failed speed controller on feed pump P51A	430*
13	Jul 94	Rebuilt regulator PC81A	100*
Total			43270

* Cost borne by outside projects

Over the course of the new control system implementation, several components failed, including the hydrogen recycle flow regulator. Each component alone is somewhat minor, but the cumulative effect prevented a timely test run of the system. Replacement parts were obtained, and other affected parts were rebuilt. Proper system operation was verified as part of the startup for some of the outside work recounted below.

A bypass line was installed around the guardbed reactor for the DOE End Use Study experiments. The line runs directly from the preheater to the reactor and is of the "double block and bleed" design.

Recent projects involving vacuum distillation have offered a considerable challenge to the distillation column of the hydrotreater plant. Although the still was made for vacuum duty, recent work has proven especially challenging. The greater volume percent fractions taken overhead and broad boiling ranges of various feedstocks have revealed an inadequacy of the "head" of liquid available to the bottoms pump for its operation. (Liquid head is the effective height of the surface of the liquid to be pumped above the level of the inlet of the pump.) Recent trial modifications included streamlined tubing from distillation column to pump to minimize resistance to flow of the bottoms liquid. The final solution will be to raise the level of the distillation column at a future time when operations will allow.

On April 21, 1994, an inventory of AFC test fuels and components in storage was performed. AFC project materials (with brief descriptions) are listed in Table 4, including those AFC materials used in earlier AFC operating contracts.

Table 4. AFC Fuels and Fuel Components in Storage

SwRI ID No.	Product Type	No. of 55 Gal. Drums	Description
FL-1309	Middle Distillate	1	High nitrogen shale oil hydrotreated in Run 10
FL-1330	Oil	1	Paraho shale oil blend
FL-1393	Naphtha	1	Wilsonville coal liquid hydrotreated in Run 12
FL-1418	Naphtha	1	Wilsonville coal liquid hydrotreated in Run 13
FL-1440	Oil, DF range	5	Coker gas oil from Texaco
FL-1442	Oil, DF range	0.5	Low sulfur, light coker gas oil hydrotreated in Run 14
FL-1443	Oil, DF range	1	Low aromatics, light coker gas oil hydrotreated in Run 14
FL-1538	Oil, DF range	1	Light cycle oil
FL-1615	Oil, DF range	1	Low sulfur, light cycle oil, hydrotreated
FL-1627	Diesel fuel	13	Straight run, petroleum derived
FL-1840	Diesel fuel	1	Fischer-Tropsch Diesel
FL-1873	Diesel fuel	1	Low aromatics, hydrotreated, straight run diesel
FL-1932	Oil	23	Paraho shale oil
FL-2028	Naphtha	2	FCC product, hydrotreated in Run 26
FL-2032	FCC naphtha	6	FCC product
FL-2062	Naphtha	2	FCC product, hydrotreated in Run 30
FL-2065	Oil	1	Coal liquid, direct liquefaction, paraffinic
FL-2066	Solvent	1	Blend, paraffinic solvent and methanol

Notes: DF = diesel fuel, 350°-650°F
FCC = fluid catalytic cracking
Oil = full boiling range material

Task 2: Facility Upgrade

In October, acquisition of the control system upgrades for the hydrogenation pilot plant started. The facility upgrade was the most significant time- and cost-intensive portions of this year's pilot plant operations. The hydrogenation pilot plant was originally constructed 11 years ago by Xytel. Because the computer and control hardware and software had become obsolete with the manufacturers, the pilot plant was experiencing more frequent and serious service interruptions that arose from the control system. For these reasons, the system required an upgrade. Xytel was selected to perform the facility upgrade because of its experience with several proprietary items on the pilot plant. In addition, Xytel's cost was nearly 50% lower than the in-house cost, and Xytel could provide services during the required time period when process sessions were not scheduled.

The computer upgrade for the pilot plant included acquisition and installation of computer/interface hardware, FIX software, and computer system documentation. Design discussions were held before work began to review all factors of the existing system to replicate in the new version. During programming, a project engineer visited the site. During and after installation, Xytel provided training for operators and engineers.

The computer/interface hardware consists of the following equipment:

- Compaq 486S/20 32 bit computer with Intel 486SX processor operating at 20 megahertz (MHz), 4 megabytes (MBytes) of memory, a 3.5-in. 1.44 MB floppy drive, a 5.25-in. 1.2 MB floppy drive, a 40 MB hard drive, and onboard serial, parallel and VGA video ports

- NEC MultiSync 3 DFG VGA color monitor

- Epson LG510 (or equivalent) 24-pin dot matrix printer

- Persyst DCP-88i communications processor with 8088 processor, 512 kilobytes (Kbytes) memory, 4 RS-232C communication ports

- Xytel Counter Card for handling pulse inputs and outputs.

- Current loop <-> RS232C converter for weight scales

The control system software installed is based on FIX DMACS™ (Version 3.02) software package from Intellution, Inc. The function of the program is System Control and Data Acquisition (SCADA). The expanded SCADA package was also installed. It has the following options and capabilities:

- Pixel graphics
- Historical trending
- Multitasking shell
- Continuous control and batch
- uMAC-4000 I/O driver
- Optomux 22 counter card driver.

The engineering portion of the package contains the following features:

- Menu-driven system and control strategy configuration with on-line help
- Real-time display builder with mouse support
- Set up of password protection, operator entry limits, display linkages, tag groups, and key macros
- Set up of historical trending of process variables, formatting of run-time reports, etc.

The run-time portion of the package contains the following features:

- Data acquisition, storage, and control
- Analog and digital alarm detection and message generation
- Real time and historical trending and display
- On-line calculations, math coprocessor support
- Color graphic (pixel) displays, 1 second process data update, password protection and operator entry limits, operator command logging, and graphic printing
- High level language program (C) support
- Multi-tasking.

In January 1994, the hydrogenation pilot plant control system upgrade was installed on site. Xytel provided a turnkey operation for configuring the system based upon the previous pilot plant system functions. The control system database was created based on the process I/O and control strategies used by Xytel on the many Distributed Manufacturing and Control Software (DMACS) systems they have made. Standard displays were created for the use of the operator to monitor and control the process. Xytel used the C-Data Base Access package to write a custom background program to interface with the weight scales in the system.

A variety of equipment-specific circumstances occurred (intermittent power supply, wiring mismatches, and others) that, combined with failures in the process system (such as the recycle hydrogen regulator), had the effect of limiting the training time for the operators. During installation, outstanding conditions of sensors and actuators (about 5) such as default states, startup conditions, and fail open/fail closed mixups were resolved by Xytel. The process of updating the standard operating procedure (SOP) and catalyst activation was used as a training exercise to accomplish needed work and further familiarize the staff with the new system.

In addition to the installation services, Xytel modified the electrical drawing to reflect the changes required to the computer system upgrade. Three copies of the system manual containing operating instruction, software descriptions, system data base, graphic screens, updated electrical drawing, and other system information were provided by Xytel. All hardware and software vendor manuals and disks were also provided.

From February to May 1994, the control computer and associated software replacement was completed, a shakedown run was performed and system documentation refined. By June 1994, the control system was operating well, all Xytel manuals had been submitted, and the last payments on the Xytel subcontract were released.

In July 1994, the upgraded computer system experienced extensive failure of channels on the electronic communication equipment. The cost of repair of the communication hardware was recovered on outside projects in operation when the failures occurred. The electronic communication equipment collects and transmits the signals from the sensors for temperature and pressure on the hydrotreater to the control computer via circuitry in the DC interface box. The same equipment accepts control signals from the computer and sends them to electrically actuated components on the hydrogenation pilot plant and to electric to air converters (E to Ps) for actuation of air-powered components.

Ongoing minor changes to the software setup and operating configuration continue to improve the function of the unit. These modifications were made by project personnel. Some of these changes have avoided lengthy delays for outside assistance. These new capability with the Intellution software are the most important results of the upgrade.

The pilot plant computer system upgrade was accomplished for a fixed cost of $35,000. This cost included computer/interface hardware, FIXDMACS software, and 4 man-days labor for training and on-site installation. This price did not include travel and living costs for the Xytel engineer during system start-up. Payments were sent in 3 increments, with payment in full when all work and documentation was completed.

The computer upgrade system was under warranty for 180 days from date of shipment, or 90 days from date for field acceptance. The warranty covers defects in materials and workmanship. Xytel repaired the defective part that were found during shakedown and initial operation. Xytel's knowhow and helpful approach contributed to the successful system upgrade.

Tasks 3 and 4: Other Government and Industry Research

The goals of the AFC are to develop higher quality fuels and improve the ability to utilize alternative fuel sources. These goals are advanced through the support of other government and industrial projects that use the AFC. Work for other government programs and industry is shown below in Table 5. In addition to the new alternative fuels knowledge produced over the last 2 years by the AFC project, use of the AFC by other government agencies and industries for outside projects has contributed to better fuels and alternative fuel sources. Further, a regular schedule of pilot plant utilization helps to keep the equipment in good working order. The repair parts purchased on these projects help pay for routine maintenance.

Table 5. Utilization of the AFC by Industries and Government Agencies

User or Fuel Recipient	AFC Activity[a]	Type of Fuel[b]	Objectives
Commercial 1	H,B	D	Develop a diesel reference fuel for reduced exhaust emissions
Commercial 2	H,B	D	Develop an emissions-reducing diesel fuel and reference fuel
DOE Office of Energy Efficiency and Renewable Energy	D,B	G	Reid vapor pressure study completion
DOE Office of Fossil Energy	D	D	Ignition quality, Fischer-Tropsch fuels completion
Commercial 3	B	D	Reference and test fuels for reduced emissions
DOE Office of Energy Efficiency and Renewable Energy	D	D	Diesel fuel assay of performance and emissions
DOE Pittsburgh Energy Technology Center	H,D,B	C	End-use study of coal liquids

[a] Type of activity: H=hydrotreating, D=distillation, B=blending
[b] Type of fuel: D=diesel, G=gasoline, C=coal liquid

The following paragraphs summarize the other government and industry research projects performed this year outside of the AFUP work.

Diesel Fuel Assay

Five different diesel fuel feedstocks were processed to two levels of aromatic content: the first aromatics concentration was created by processing to 0.05 M% sulfur, and the second concentration was 10 vol% aromatics. These materials were distilled into six to eight narrow boiling range fractions that were each characterized in terms of the properties and composition. The fractions were also tested at five different speed load conditions in a single-cylinder engine in which high-speed combustion data and emissions measurements were obtained. Linear regression analysis was used to develop relationships between the properties and composition, and the combustion and emissions characteristics as determined in the engine. The results are presented in the form of the regression equations and discussed in terms of the relative importance of the various properties in controlling the combustion and emissions characteristics. The results of these analysis confirm the importance of aromatic content on the cetane number, the smoke, and the oxides of nitrogen (NO_x) emissions.

Reid Vapor Pressure Study

The data obtained in Task 2 for measuring the vapor pressure interactions of ethanol and gasoline under a variety of conditions resulted in the presentation of a scholarly publication redounding to the credit of the AFUP*. The purpose of the investigation was to document the observed vapor pressure arising from blends of ethanol with gasoline. The set of test blends in this study had been brought up to selected RVP levels by either butane or pentane. The observed vapor pressure was not a linear combination of the vapor pressures of the blending components because of the polar nature of ethanol. The subsequent range of RVP measurements were measured and discussed. Details may be found in the program synopsis for this work in Exhibit 5.

Refining and End-Use Study of Coal Liquids

The purpose of this program is twofold: a) to develop fuels that will meet gasoline and diesel fuel specifications for the future in the year 2015 and beyond, and b) to determine how the United States can use its large reserves of coal for transportation fuels. Quantities of gasoline, diesel, and jet fuel will be made for engine tests of performance and emissions from each of three to eight coal liquid feedstocks. The first three feedstocks include two coal liquids made by direct liquefaction in which the coal is dissolved in solvent and processed to convert and isolate the components most like petroleum. The third feedstock is from indirect liquefaction, in which coal is gasified and limited oxygen and the vapors are reacted in Fischer-Tropsch catalyst to form mostly paraffins much as that done in Germany in the 1940s. Because of the prevailing and foreseen limitations on refinery construction and operations, the approach becomes on of integrating coal liquids into the existing refining system. The refinery modeling program PIMS is used to outline the integration process, which may help determine where and in what percentages the coal liquid should be added to the process. Linear programming will be used to apportion the many streams of feedstock among the

---

* Erwin, J., "Vapor Pressure Interactions of Ethanol with Butane and Pentane in Gasoline," presented at the "Symposium on Oxygenates as Fuel Additives," ACS National Meeting, San Diego, CA., March 1994.

individual processing plants in the refinery that perform the upgrading operations on petroleum. The costs and value of the coal liquids to refining will be investigated as part of the final PIMS model.

California Reference/Candidate Fuels

On or after October 1, 1993, diesel fuel being sold in California have had to meet new, more stringent composition and property requirements to reduce diesel engine emissions. Most notably among these is a significantly lower aromatics content. Major refiners with crude capacity above 50 million barrels per day must produce a diesel fuel with a maximum aromatic content of 10% by volume. Small/independent refiners must produce a diesel fuel with a maximum aromatic content of 20% by volume.

The California Air Resources Board (CARB) does permit an alternative diesel fuel meeting the basic requirements based on equivalent emissions. Production of a candidate fuel can be certified by CARB if the emissions (oxides of nitrogen and sulfur, along with particulate matter) of the candidate fuel do not exceed the emissions from a reference fuel made to meet the basic requirements. Reference fuels have been produced for California refiners at the AFC hydrogenation pilot plant. Feedstocks from California and North Slope crudes have been processed to produce blending components. Processing involved hydrotreating (reducing aromatics, polyaromatics, sulfur, and nitrogen) at different severity levels, distilling, and blending to produce quantities sufficient for emission testing at SWRI. The in-depth approach was required to meet the limits of the key properties - aromatics, polyaromatics, nitrogen, sulfur, and cetane - and preserve the natural emissions tendency of the fuels.

Test Fuels Produced

Over the past year, several test fuels production projects have been undertaken and are in various stages of completion. The following paragraphs present a chronology of events.

Completion of Year One Test Fuels

Two projects that were started in year one of the contract and completed this year were the a) production of low-sulfur, low-olefin, catalytically cracked gasoline, and b) production of low-emission gasoline. The last phases of fuels preparation were completed and the results for these two projects were compiled and presented in the year one annual report entitled, "Maintenance and Operation of the U.S. DOE Alternative Fuels Center," which was finalized in October 1993. This report should be referenced for the detailed results of both of these projects. These two projects are significant to the continuing work, as they serve as the building blocks for other ongoing projects and will be useful to future projects involving fuels research. The basis and results of both projects are briefly discussed below.

Low Sulfur Fluid Catalytically Cracked (FCC) Stocks

The task of producing low-sulfur, low-olefin, catalytically cracked gasoline experimented with one means for reducing the sulfur concentration of reformulated gasoline. One source of sulfur is catalytically cracked stocks. These are stocks produced by fluidized bed catalytic cracking. Sulfur reduction was accomplished by hydrotreating the straight-run stocks blended into finished gasoline. Hydrotreating under mild conditions effectively removes sulfur, nitrogen, and olefins from FCC products.

This project required acquisition and hydrotreating of two different catalytically cracked gasoline blendstocks. The feedstocks represented a broad range naphtha from a California source and a narrow range naphtha from an East Coast source. Each feedstock was hydrotreated in a trial run and also in a longer production run to produce sufficient material for blending specification gasoline and engine testing.

The conclusions drawn from the test fuels were that mild hydrotreating of FCC products effectively removes sulfur and olefins with minimal effects on aromatics and octane quality. This approach to producing reformulated gasoline has significant economic advantages.

Low-Emission Gasoline

This gasoline was formulated and produced based on the prediction of emissions reactivity that requires a correlation between the exhaust species and either the fuel species or the fuel properties. For concentrations of species solely created in the exhaust and for most species that appear in the exhaust in proportion to their concentration in the fuel, Leppard's** data provided the basis for the predictive model that was developed in the project.

** Leppard, W.R., R.A. Gorse, L.A. Rapp, J.C. Knepper, R.B. Vaughn, and W.J. Koehl, "Effects of Gasoline Composition on Vehicle Engine-Out and Tailpipe Hydrocarbon Emissions - Auto/Oil Air Quality Improvement Research Program," Society of Automotive Engineers Meeting, SAE Paper No. 920329, October 1992.

Factors such as distillation range, RVP volatility, and octane number were used to guide the test fuel composition. These properties, together with fuel component densities and other correlation data were used to minimize calculated emissions/reactivity of the blend by linear programming. These estimated combustion factors provided an estimated concentration of each hydrocarbon species as a fraction of total exhaust hydrocarbons. The U.S. Environmental Protection Agency Complex Model was used to calculate the relative quantities based on composition. The resulting test fuel calculated to about half the reactivity of the Air Quality Improvement Research Project (AQIRP) Fuel A, which was based on the 1990 U.S. average gasoline quality.

Five drums of the test fuel were blended and delivered to Mantech Environmental Technology, Inc., in Durham, North Carolina. This batch was sent to Mantech for emissions measurements in their test program.

Year Two Test Fuels Produced

Test fuels were produced at the AFC over the last year for government and industry clients. Table 6 presents the production information for each test fuel run.

Table 6. Test Fuels Produced at the AFC

Run #	Start	Feed Description	Product	Vol (gal)
Hydro 39	10/15/93	Light cycle oil (Valero)	FL-2177	10
Hydro 40 (trial run)	04/11/94	Commercial B diesel fuel	Trial run	
Hydro 41 (trial run)	04/15/94	Commercial A diesel fuel, high sulfur #2 diesel	Trial run	
Hydro 42	05/11/94	Commercial B diesel fuel	FL-2285 commercial diesel product from 1st severity run, Hydro 42	312
Hydro 43	05/16/94	Commercial B diesel fuel	FL-2286 commercial diesel product from 2nd severity run, Hydro 43	308
Hydro 44	06/02/94	Commercial B diesel fuel	FL-2314 commercial diesel product from 3rd severity run, Hydro 44	302
Hydro 45	06/07/94	Commercial A diesel fuel, high sulfur #2 diesel	FL-2321 Commercial Htr Run #45 1st severity - Commercial A feed	303
Hydro 46	06/11/94	Commercial A diesel fuel, high sulfur #2 diesel	FL-2322 Commercial Htr Run #46 2nd severity - Commercial A feed	304
Hydro 47	06/15/94	Commercial A diesel fuel, high sulfur #2 diesel	FL-2325 Commercial Htr Run #47 3rd Severity - Commercial A Feed	300
Dist Trial Run	07/17/94	DFM	Trial run	
Dist 55	07/18/94	Blend of Run 34 off-spec from FL-2030	FL-2353 Overhead, bottoms product of Distillation #55	75
Dist 56	07/20/94	Commercial C DF-2, Code U for candidate fuel preparation	FL-2357 Overhead, bottoms product of Distillation #56	160

Visitors and Tours

The DOE AFC was host to many visitors during the year. Many casual stops are not recorded, but Table 7 enumerates several of the year's tours. The continuing interest of visitors is an encouragement for the work of the Center. Table 7 does not include the project visits by NREL staff or by the sponsors of the many projects in progress throughout the year. The work conducted in emissions reduction, particularly for diesel fuel, has drawn attention among U.S. interests and abroad as can be inferred from international visitors in the table.

Table 7. Tours and Visits to DOE Alternative Fuel Center

Date	Identity	Number	Interest
09/03/93	Northside Independent School District tour	2	High school students
12/15/93	Postdoctoral candidate	1	Employment visit
04/01/94	Engineer, Shell Malaysia	1	Nat. gas FT liquids
04/06/94	Conoco Petroleum	3	Equipment capabilities
04/20/94	California refiner	1	Reduced emission diesel
05/10/94	Commercial vendor	2	Replacement pump
06/08/94	Project Deepstar meeting	6	Deepwater crude production
06/28/94	TPS Technologies	3	Diesel production
06/21/94	Alternative Fuels Council	6	FT coal liquids

Task 5: Health and Safety Compliance

Health and safety aspects of all AFC maintenance and operations were closely monitored over the past year. No formal noncompliance issues with any local, state, or federal entities resulting from this work occurred over the contract year. Normal `wear and tear' of the building monitoring systems have resulted in malfunctioning sensors, as noted in Table 1. These will be repaired or replaced in the future.

Conclusions

- The AFC has been placed in good working order since June 1994, after the new computer control system upgrade was installed and fine tuned. SwRI plans to renovate or replace the safety sensors in the laboratory building.

- The AFC test fuel sample inventory has been maintained leak free this year.

- The implementation of new environmental regulations, particularly in California, has increased the outside work for the AFC.

- Readiness to serve AFUP has been maintained and increased with the exercise of outside work and the installation of the control system modernization.

- In addition to the new alternative fuels knowledge produced this year by the AFC project, the use of the AFC by other government agencies and industries for outside projects has contributed to better fuels and alternative fuel sources. This is clear evidence of the widespread interest in, and value of, the AFUP and the AFC.

Exhibit 1. Index of Monthly Progress Reports

XS-2-12130-1 Summary of Monthly Progress Reports (01-5151) Year 1

Topics	1	2	3	4	5	6	7	8	9	10	11	12
Sample Inventory										●T	●T	
Maintenance Log	●		●					●	●	●	●	●
Equipment Custody					●							
Hydrotreat Cracked Gasoline		●	●	●								
Travel/Contacts					●							
Outside Processing				●	●		●	●	●	T	●	●
Hydrogen Trailer & Pilot Plant Components			●	●		●	●			●	●	●
Low Reactivity/ Emissions Gasoline	●	●	●	●	●							
Visitor and Tours									●	●	●	●
Environmental Safety	●	●	●	●	●	●	●	●	●	●	●	●
Control Upgrade	●		●	●	●	●	●	●	●	●	●	●

Note: Reference Month 1 = August 1993

● Topic covered
T Table (number)
F Figure (number)

XS-2-12130-1 Summary of Monthly Progress Reports (01-5151) Year 2

Topics	13	14	15	16	17	18	19	20	21	22	23	24
Sample Inventory	●								T2			
Maintenance		●	●	●	●	●			●	●		
Travel/Contacts				●								
Outside Processing	●		●			●	●	●	●	●	●	●
Low Reactivity/ Emissions Gasoline	●											
Visitor and Tours								●	●		●	●
Control Upgrade		●	●	●	●	F1-5	●		●			
Ethanol RVP				●	●							
Small Reactor						●						
Schedule									T1	T		

● Topic covered
T Table (number)
F Figure (number)

Exhibit 2. Annual Government Property Inventory

SOUTHWEST RESEARCH INSTITUTE

6220 CULEBRA ROAD • POST OFFICE DRAWER 28510 • SAN ANTONIO, TEXAS, USA 78228-0510 • (210) 684-5111 • TELEX 244846

Refer to: 01-5151
3 August 1994

NATIONAL RENEWABLE ENERGY LABORATORY
1617 Cole Boulevard
Golden, Colorado 80401-3393

Attention: *Mr. George A. Honold*

Subject: Subcontract No. XS-2-12130-1; Physical Inventory
SwRI Project No. 01-5151

Dear Mr. Honold:

The attached inventory listing identifies the Government Furnished Property (GFP) which was provided under Modification No. 1 and is accountable to subject subcontract.

Your letter of 25 July 1994 and Article 16 of Modification No. 2 identifies capital equipment in the amount of $6,500.00 and low value equipment in the amount of $3,500.00. This property is actually replacement components and, as such, is not detailed in the inventory.

The computer system is a replacement for a failed computer which is part of the Hydrotreater System, property tags DEN301271, A & B. The mass flow meter is a replacement component and is also installed in the Hydrotreater System.

Request disposition instructions be provided for the failed computer. I am advised that the unit was manufactured by XYTEL to unique specifications especially for the Hydrotreater System and is "one of a kind". Since there is no commercial value for the scrap computer, I would suggest abandonment in place as the most economical disposition. With your abandonment instructions, we will dispose of it at no cost to NREL. The same action will also apply to the scrap flow meter.

Should you have any questions or require additional information, please contact the undersigned at (210) 522-2930.

Yours very truly,

Don Sylvester
Property Administrator

DS/as

SAN ANTONIO, TEXAS
HOUSTON, TEXAS • DETROIT, MICHIGAN • WASHINGTON, DC

Refer to: 03-5151

GOVERNMENT PROPERTY INVENTORY & CERTIFICATION

NREL Subcontract No: XS-2-12120-1 Subcontractor: Southwest Research Institute

DOE Tag No.	Item Description or Nomenclature	Mfgr. Name Model No. & Serial No.	Acquisition/ Fabrication Cost	Acquisition Reference Number	Location	Disposition Status	Condition Code
DOE01272	Fuel Storage Facility		192,338.00	Mod. 1	SwRI Division 03		5
DEN301270	Computer	Apple IIE	2,856.00	Mod. 1	SwRI Division 03		5
NAS301147	Tank Aboveground		3,735.00	Mod. 1	SwRI Division 03		5
NAS301148	Tank Aboveground		3,735.00	Mod. 1	SwRI Division 03		5
NAS301149	Tank Aboveground		2,680.00	Mod. 1	SwRI Division 03		5
NAS301150	Tank Aboveground		2,680.00	Mod. 1	SwRI Division 03		5
NAS301151	Tank Aboveground		1,285.00	Mod. 1	SwRI Division 03		5
NAS301152	Tank Aboveground		1,285.00	Mod. 1	SwRI Division 03		5
NAS301153	Tank Aboveground		1,285.00	Mod. 1	SwRI Division 03		5
DEN301271 A & B	Hydrotreater System		427,869.00	Mod. 1	SwRI Division 03		5
MMO1427	Air Ambient Vaporizer	Ceyaire	1,455.00	Mod. 1	SwRI Division 03		5
MMO1428	Cexhectric 6kw Gas Heater		1,942.00	Mod. 1	SwRI Division 03		5
MMO1425	3,000 Gallon Cryogenic Tank		19,500.00	Mod. 1	SwRI Division 03		5
MMO1426	Cryogenic Pump Unit		17,880.00	Mod. 1	SwRI Division 03		5
MMO1423	Seamless Pressure Vessel (Surge Tank)		3,500.00	Mod. 1	SwRI Division 03		5
MMO1424	Dual Channel Gas Detection System		1,912.00	Mod. 1	SwRI Division 03		5
MMO1422	Laminar Flow Element		1,340.00	Mod. 1	SwRI Division 03		5

I, an authorized representative of the subcontractor, hereby certify that the above information is complete and accurate.

Don Sylvester 3 Aug 94

(Signature) (Date)

Don Sylvester Property Administrator

(Printed Name) (Title)

Refer to: 03-5151

GOVERNMENT PROPERTY INVENTORY & CERTIFICATION

NREL Subcontract No: XS-2-12120-1 Subcontractor: Southwest Research Institute

DOE Tag No.	Item Description or Nomenclature	Mfgr. Name Model No. & Serial No.	Acquisition/ Fabrication Cost	Acquisition Reference Number	Location	Disposition Status	Condition Code
N/A	Valve, Excess Flowcheck		125.00	Mod. 1	SwRI Division 03		5
N/A	Gas Detector		193.00	Mod. 1	SwRI Division 03		5
N/A	Hard Disk Drive	Vulcan	499.00	Mod. 1	SwRI Division 03		5
N/A	Charge Amplifier	504E	685.00	Mod. 1	SwRI Division 03		5
N/A	2 Each Pressure Transducer	12AP300CVK	1,600.00	Mod. 1	SwRI Division 03		5
N/A	Power Supply 4 Amp		217.00	Mod. 1	SwRI Division 03		5
N/A	Pump MB41		208.00	Mod. 1	SwRI Division 03		5
N/A	Heat Exchanger BCF		479.00	Mod. 1	SwRI Division 03		5
N/A	Data General 4222 Digital Interface		400.00	Mod. 1	SwRI Division 03		5
N/A	Pressure Regulator	H2H50	115.00	Mod. 1	SwRI Division 03		5
N/A	Circulation Heat	CCH-21005	313.00	Mod. 1	SwRI Division 03		5
N/A	Rotameter	110-24	842.00	Mod. 1	SwRI Division 03		5
N/A	Timing Light Transducer	7080-012	180.00	Mod. 1	SwRI Division 03		5
N/A	Doric Controller	DC-7025-L	395.00	Mod. 1	SwRI Division 03		5
N/A	Injector Pump		450.00	Mod. 1	SwRI Division 03		5
N/A	Storage Cabinet	Grainger 3W043	161.00	Mod. 1	SwRI Division 03		5
N/A	Filing Cabinet	14121CL-DS	53.00	Mod. 1	SwRI Division 03		5

I, an authorized representative of the subcontractor, hereby certify that the above information is complete and accurate.

Don Sylvester 3 Aug 94

(Signature) (Date)

Don Sylvester Property Administrator

(Printed Name) (Title)

Refer to: 03-5151

GOVERNMENT PROPERTY INVENTORY & CERTIFICATION

NREL Subcontract No: XS-2-12120-1 Subcontractor: Southwest Research Institute

DOE Tag No.	Item Description or Nomenclature	Mfgr. Name Model No. & Serial No.	Acquisition/ Fabrication Cost	Acquisition Reference Number	Location	Disposition Status	Condition Code
N/A	Blower w/Motor		320.00	Mod. 1	SwRI Division 03		5
N/A	Pressure Regulating Valve		400.00	Mod. 1	SwRI Division 03		5

I, an authorized representative of the subcontractor, hereby certify that the above information is complete and accurate.

Don Sylvester (Signature) 3 Aug 94 (Date)

Don Sylvester (Printed Name) Property Administrator (Title)

Exhibit 3. Description of Facilities

Hydrogenation Unit Capabilities

The pilot unit was designed with flexibility to handle a range of hydrogenation operations. Nominal feed rate is 1.0 to 2.2 gal/hr. The reactor section operates at pressures to 3000 psig and temperatures to 1000 °F. Hydrogen circulation capacity of 250 scf per hour is equivalent to about 4.800 scf per barrel at maximum feed rate. Appropriate operating conditions and catalyst types can be selected for the following product objectives at various levels of severity:

SEVERITY	PRODUCT OBJECTIVE
Low	Hydrotreat to reduce sulfur and nitrogen content of reformer feed or distillate fuel.
Moderate	Hydrotreat to prepare feedstocks for hydrocracking or to increase hydrogen content of fuel.
Intermediate	Hydrogenate aromatics to produce low-emission diesel fuel.
High	Hydrocrack light cycle oil to make high energy density jet fuel.
High	Catalytic reforming of low octane naphtha.

Test fuels or blending components have been made in quantities of 50 to 500 gallons for many fuel evaluation projects. The unit is used to make fuels from shale oil and coal liquids for DOE AFUP.

The figure below, a process schematic of the unit, shows feed joined by hydrogen through a preheater to two fixed-bed reactors in series. Reactor effluent is cooled and liquid product is recovered in two stages of separation. Recycled hydrogen and vent gases are scrubbed to remove contaminants. The liquid product goes to a distillation column, which is used as a stripper to remove H_2S or adjust the flash point. Alternatively, the distillation column can take a light product overhead at atmospheric pressure or under vacuum. The column bottoms may be collected as product or recycled to the reactor section. The recycle pump can also be used to increase total feed rate to 3.5 gal/hr.

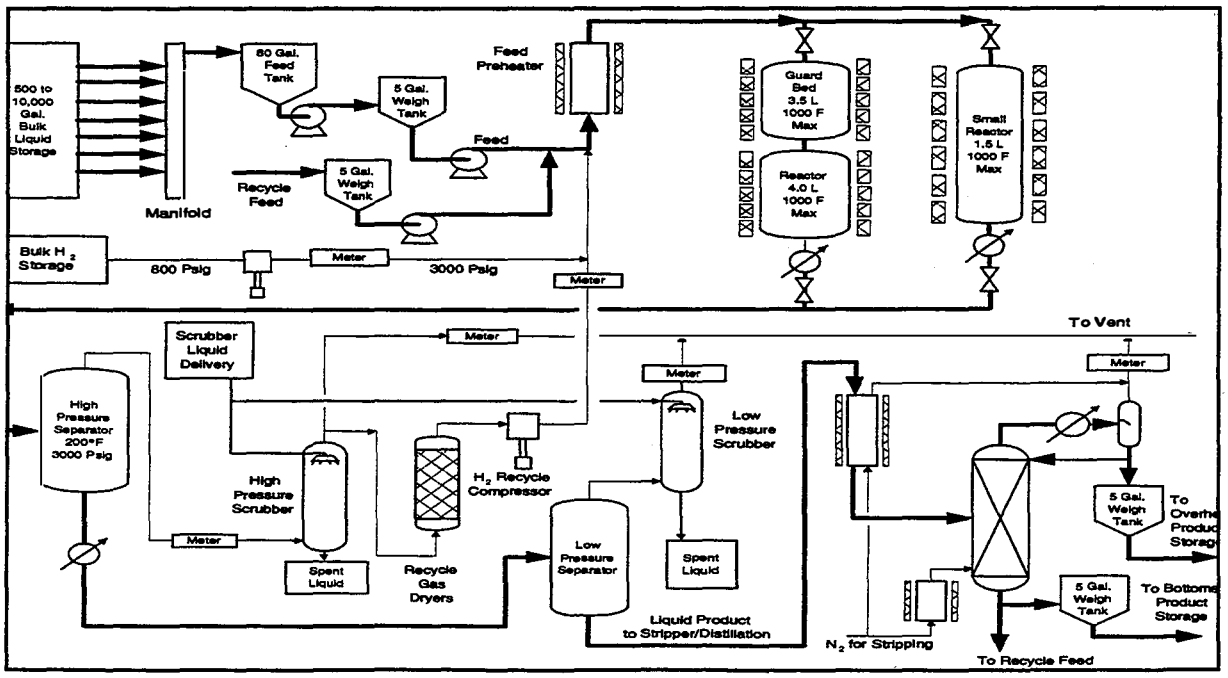

Hydrogenation Pilot Plant Flow Schematic.

Continuous Fractionation Unit

A pilot scale Continuous Distillation Apparatus is available for research projects with 1- to 5-day run times. The distillation equipment was funded by the U.S. Navy Air Propulsion Center in cooperation with the U.S. Army Belvoir Research and Development & Experimental Center. The facility is housed in the Synthetic Fuel Center on the grounds at SwRI and includes all tankage lines, pumps, heat exchangers, and automatic controls for independent operation. The column has the capacity to fractionate approximately 120 gal/day of distillable feed, producing overhead products in the range of 10% to 90% of the feed, with the remainder as bottoms product. The column is also equipped for vacuum distillation. Column specifications are:

Column Type:	**Continuous w/removable packing**
Pressure Range:	**0.2 - 14.7 psi**
Temp. Range:	**150° to 600°F (900°F under vacuum)**
Feed Rate:	**Nominally 5 gal/hr**
Overhead Product:	**10% to 90% of feed**
Reflux Ratio:	**Variable**
Theoretical Plates:	**10-40 (depending on operating conditions, packing)**

The distillation system is designed for unattended fractionation of feedstocks over the range of operating conditions listed above. Process control and data acquisition is through a dedicated microcomputer system linked directly to the process. A sophisticated safety system is part of the operating program and contains dissimilar alarm logic to provide, on one level, troubleshooting actions, and on a higher level, controlled system shutdown. Feed enters the column via a preheater through any of five ports. Light product is condensed overhead and directed back to the column as reflux or to the overhead product receiver. Bottoms product is drawn from the reboiler at the bottom of the column as the level in the reboiler rises.

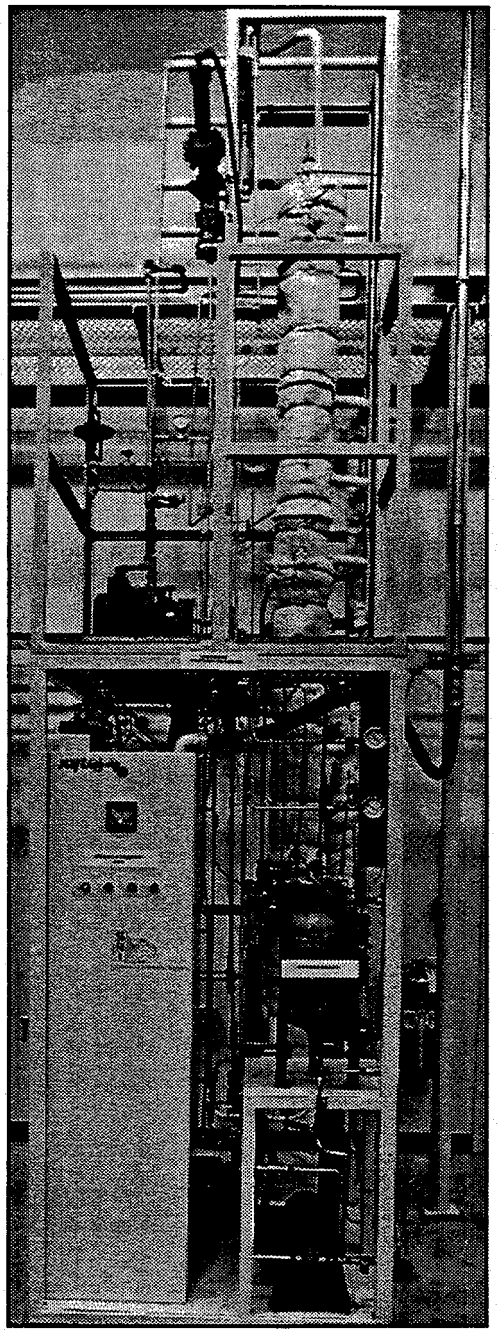

Continuous Fractionation Pilot Plant

Exhibit 4. Bibliography of AFC Publications

Bibliography of AFC Publications

Erwin, J., "Assay of Diesel Fuel Components Properties and Performance," presented before the Division of Fuel Chemistry, American Chemical Society, Washington, DC., August 23-28, 1992.

Erwin, J., "Review of `Applied Hydrocarbon Thermodynamics' by Wayne C. Edminister," *Industrial Chemist*, Vol. 9, No. 9, p. 90, September 1988.

Erwin, J., Ryan, T.W. III, "The Standing of Fischer-Tropsch Diesel in an Assay of Fuel Performance and Emissions," Presented at Pittsburgh Energy Technology Center at Contractors Coordinators Meeting, September 29, 1993.

Erwin, J., Sefer, N.R., "Shale-Derived Diesel Test Fuels for Utilization Studies," Society of Automotive Engineers, 1988 Fuels and Lubricants Meeting, SAE Paper No. 881627, Portland, OR, October 11, 1988.

Erwin, J., Sefer, N.R., "Synthetic Fuels from Coal-Derived Distillate as Jet Fuels for High Mach Aircraft," American Chemical Society, Division of Petroleum Chemistry, Symposium on the Structure of Future Jet Fuels II, Miami, FL, September 12, 1989.

Erwin, J., Sefer, N.R., Glavincevski, B., "Production and Analysis of EDS Coal-Derived Middle Distillate Test Fuels From Hydrogenation at Three Levels of Severity," Society of Automotive Engineers, 1987 International Fuels and Lubricants Meeting and Exposition, SAE Paper No. 872038, Toronto, Ontario, November 2, 1987.

Podar, S.K, Chum, K.W., Ragsdale, R., (Bechtel), Erwin, J., Moulton, D.S., (SwRI), Bailey, B.K., (NREL), "Evaluation of Catalytically Hydrotreated Cracked Stocks for Reformulated Gasoline by LP Modeling," Presented at AIChE Meeting, St. Louis, MO., November 7, 1993.

Ryan, T.W. III, Erwin, J., "Diesel Fuel Composition Effects on Ignition and Emissions," Society of Automotive Engineers, International Fuels & Lubricants Meeting and Exposition, SAE Paper No. 932735, October 18-21, 1993, Philadelphia, PA.

Ryan, T.W. III, Erwin, J., "Effects of Fuel Properties and Composition on the Temperature Dependent Autoignition of Diesel Fuel Fractions," Society of Automotive Engineers, International Fuels & Lubricants Meeting and Exposition, SAE Paper No. 922229, and Vol. 1 of SAE Transactions, San Francisco, CA, October 19-22, 1992.

Russell, J.A., et al., "Identification of Probable Automotive Fuels Composition: 1985-2000," Department of Energy, Final Report No. HCP/W3684-01/1, May 1978.

Sefer, N.R., "Engine and Vehicle Testing of Alternative Gasolines," U.S. Department of Energy, DOE Contractor Coordination Meeting, Dearborn, MI, April 1982.

Sefer, N.R., "Formulation and Evaluation of Fuels from Shale and Coal Oils," U.S. Department of Energy, DOE Contractor Coordination Meeting, Dearborn, MI, October 1981.

Sefer, N.R., "Identification and Evaluation of Optimized Alternative Fuels – A Status Report and Project Outline," U.S. Department of Energy, DOE Contractor Coordinator Meeting, Detroit, MI, October 1979.

Sefer, N.R., Erwin, J., "Hydroprocessing of Direct Coal Liquefaction Product for Diesel Engine Fuel," Society of Automotive Engineers, 1989 International Fuels and Lubricants Meeting and Exposition, SAE Paper No. 892131, Baltimore, MD, September 27, 1989.

Sefer, N.R., Erwin, J., "Reforming and Hydrotreating of Shale and Coal-Derived Products for Making Test Fuel," Sponsored by Canadian Energy, Mines and Resources and U.S. Department of Energy, Windsor Workshop on Alternative Fuels, Windsor, Canada, June 25, 1985.

Sefer, N.R., Erwin, J., "Synthetic Gasolines and Diesel Fuels From Processing of Shale Oils and Coal Liquids," Society of Automotive Engineers, International Fuels and Lubricants Meeting, Transactions, SAE Paper No. 861542, Philadelphia, PA, October 1986.

Sefer, N.R., Erwin, J., Russell, J.A., "Synthetic Fuel Center Construction and Alternative Test Fuels Production," U.S. Department of Energy, Final Report No. DOE/CS/50070-1, ACO1-84CE-50071, September 1985.

Sefer, N.R., Moulton, D.S., "Properties and Performance of Methanol/Gasoline Blends Containing Methanol Concentrations From 0 to 100 Percent," Sponsored by Canadian Energy, Mines and Resources and U.S. Department of Energy, Windsor Workshop on Alternative fuels, Windsor, Canada, June 25, 1985.

Sefer, N.R, Russell, J.A., "Formulation and Evaluation of Highway Transportation Fuels from Shale and Coal Oils," U.S. Department of Energy, Second Annual Report No. DOE/CS/50017 2, DEAC0179CS-50017, December 1981.

Sefer, N.R., Russell, J.A., "Regional Refining Models for Alternative Fuels Using Shale and Coal Synthetic Crudes," Department of Energy, First Annual Report No. DOE/CS/50017-1, DEAC0179CS-50017, November 1980.

Sefer, N.R., Russell, J.A., Ryan, T.W. III, Callahan, T.J. III, "Identification and Evaluation of Optimized Alternative Fuels," 20th Automotive Technology Development Contractor Coordination Meeting, SAE Publication No. P-120, pp. 333-346, Dearborn, MI, October 1982.

Sefer, N.R., Russell, J.A., Ryan, T.W. III, Callahan, T.J., "Refining Studies and Engine Testing of Alternative Highway Transportation Fuels," U.S. Department of Energy, Final Report No. DOE/CS/50017-3, DEAC0179CS-50017, September 1982.

Exhibit 5. Program Synopses for AFC Projects

List of Synopses

Title	Contract No.
Maintenance and Operation of the U.S. DOE Alternative Fuel Center	XS-2-12130-1
Diesel Fuel Component Contribution to Emissions and Performance	YZ-2-11215-1
Vapor Pressure Interactions of Ethanol with Butane and Pentane	BN-1-10134-1
Processing and Analysis of Diesel Fuel Fractions	BN-1-10134-1
Synthetic Fuel Center Operations	86X-22027C
Hydrogenation of Caustic Washed Exxon Donor Solvent	37Y-52303V
Storage, Processing, Inspection, and Analysis of Petroleum Products Including Unfinished Fuels, Blends, and Synfuels	DEAC01-84CE-50070
Refining Studies and Engine Testing of Alternative Highway Transportation Fuels	AC01-79CS-50017
Identification of Probable Automotive Fuels Composition: 1985-2000	EY-76-C-04-3684

Program Title: **Maintenance and Operation of the U.S. DOE Alternative Fuel Center**

Sponsor: National Renewable Energy Laboratory

Contract Number: XS-2-12130-1

Project Number: 03-5151

Inclusive Dates: August 5, 1992 - August 4, 1993

Publications: S.K. Poddar, K.W. Chum, R. Ragsdale, J. Erwin, D.S. Moulton, and B.K. Bailey, "Evaluation of Catalytically Hydrotreated Cracked Stocks for Reformulated Gasoline by LP Modeling," American Institute of Chemical Engineers (AIChE) National Meeting, St. Louis, MO., November 7-12, 1993.

J. Erwin, "Vapor Pressure Interactions of Ethanol with Butane and Pentane in Gasoline," Symposium on Oxygenates as Fuel Additives, American Chemical Society (ACS) National Meeting, San Diego, California, March 1994.

Technical Objectives Five tasks covered the work in the Alternative Fuels Utilization Program to enhance the quality of alternative fuels and improve the utility and value of U.S. energy sources: Task 1 – Facility maintenance for the Alternative Fuel Center (AFC); Task 2 – Production of two test fuels, including: a) preparation of low-sulfur, low-olefin catalytically-cracked gasoline blendstock, and b) low-emission gasoline; Task 3 – Other Government Research; Task 4 – Industry Research (noninterference basis); Task 5 – Safety and Health Compliance.

Approach A timeline was established to coordinate the uses of the hydrogenation pilot plant of the AFC among Task 2 project work, other government work, and work for industry. Consistent with assisting the AFUP in accomplishing its general goals, the work was done with all fuel producers, regulators, and users in mind. AFC capabilities and results were disseminated whenever possible.

Accomplishments Hydrotreater maintenance was achieved through selected repairs on project and diligent upkeep on outside projects. The equipment was used for preparation of low-sulfur, low-olefin cracked gasoline blendstock, which was further investigated through economic analysis *via* linear programming. This material proved to be cost effective for meeting potentially lower limits on sulfur content of gasoline. Linear programming was also used to devise a "minimum emissions" gasoline from hydrocarbon sources which could be produced from alternative or conventional blendstocks. This formulation showed half the reactivity of the AQIRP Test Fuel A. Work for other government programs and industry is shown below.

Utilization of the AFC by Industries and Government Agencies

User or Fuel Recipient	AFC	Type of	General Objectives
US EPA	B	D	Develop an emissions-reducing component
US EPA	B	G	RVP study
NREL	D,B	G	RVP study
DOE Fossil Energy Division	D	D	Ignition quality, Fischer-Tropsch fuels
Oil Company	B	D	Fuel producing reduced emissions
Industrial Association	B	D	Fuel partially derived from biomass
Oil Company	H,D,B	D	Fuel producing reduced emissions
DOE Fuels & Chemicals	H,D	D	Fundamental data on emissions
Oil Company	H,B	D	Fuel producing reduced emissions
Oil Company	B	G	Additive testing

* Type of activity: H=hydrotreating, D=distillation, B=blending.

Program Title: **Diesel Fuel Component Contribution to Engine Emissions and Performance**

Sponsor: National Renewable Energy Laboratory

Contract Number: YZ-2-11215-1

Project Number: 03-4764

Inclusive Dates: November 25, 1991 - October 30, 1993

Publications:

Erwin, J., "Assay of Diesel Fuel Components Properties and Performance," presented before the Division of Fuel Chemistry, American Chemical Society, Washington, DC., August 23-28, 1992.

Erwin, J., Ryan, T.W. III, "The Standing of Fischer-Tropsch Diesel in an Assay of Fuel Performance and Emissions," Presented at Pittsburgh Energy Technology Center at Contractors Coordinators Meeting, September 29, 1993.

Ryan, T.W. III, Erwin, J., "Diesel Fuel Composition Effects on Ignition and Emissions," Society of Automotive Engineers, International Fuels & Lubricants Meeting and Exposition, SAE Paper No. 932735, October 18-21, 1993, Philadelphia, Pennsilvania.

Ryan, T.W. III, Erwin, J., "Effects of Fuel Properties and Composition on the Temperature Dependent Autoignition of Diesel Fuel Fractions," Society of Automotive Engineers, International Fuels & Lubricants Meeting and Exposition, SAE Paper No. 922229, and Vol. 1 of SAE Transactions, San Francisco, California, October 19-22, 1992.

Technical Objectives The goals of this work included selecting and characterizing the deisel fuel boiling range feedstocks of greatest significance for performance and emissions for laboratory and engine measurements to determine the relationships between component origin, processing, and properties and the resulting combustion characteristics.

Approach Petroleum and coal-derived components were selected to represent the most difficult portions of the blending pool to conform to performance and emission goals of modern diesel engines. The petroleum components were reduced in sulfur and aromatic content by pilot-plant hydrogenation before distillation into selected boiling point ranges as shown below:

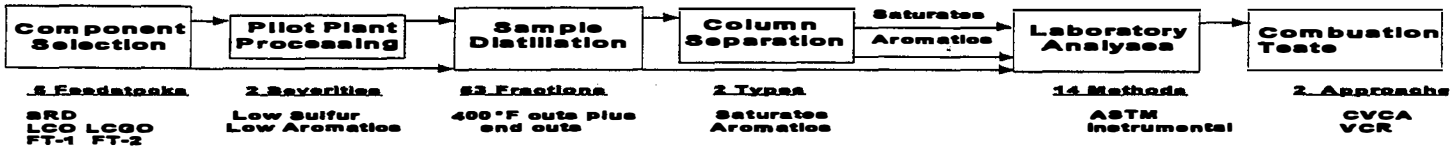

The resulting 80 fractions of feedstocks and products were analyzed for chemical composition and physical properties that would be most revealing for ignition quality and particulate generation. All samples were then tested for engine performance and emissions. Correlations of the emission behavior were used to guide the blending of proof-of-concept test fuels. This "Clean Fuel Study" was intended to deliver low- emission fuels while observing all other necessary (ASTM D 975-type specifications) properties.

Accomplishments The results of the ignition quality measurements by engine cetane rating, corellated well with the corresponding results obtained in a static combustor. The performance and emissions data were used to develop regression equations for the emissions and selected performance parameters in terms of the fuel composition and properties. The analysis indicated the importance of (1) aromatic type and quantity, (2) cetane number, (3) boiling point, and (4) relationships to other hydrocarbon constituents. These relationships all appeared to be linear in the range of interest for diesel.

The fact that the fuel properties were linearly related to the emissions justified the use of linear programming to design 10 low-emissions fuels using the same blendstocks and components that were used to develop the data base. These new fuels were tested following the same procedures that had been used in measuring the properties of the 80 test fuel samples. The results indicated that using standard linear programming techniques, where the emissions were treated as properties of the components used in the blending, that low emissions fuels can be formulated using the emissions as blending parameters of the fuel.

Program Title: **Vapor Pressure Interactions of Ethanol with Butane and Pentane**

Contract Number: BN-1-10134-0

Sponsor: National Renewable Energy Laboratory

SwRI Project No.: 03-4089-501

Start/Complete Dates: November, 1990 - December, 1992

PROGRAM SYNOPSIS

Technical Objectives: To compare volatility as measured by Reid vapor pressure RVP of gasoline blends containing:

- Controlled amounts of pentane and butane
- Before and after addition of 10 volume percent ethanol

Approach: A commercial unleaded gasoline was obtained and tested for oxygenates by ASTM D 4815. The test found no alcohols or ethers and measured 0.95 volume percent benzene. Ten liters of the gasoline was distilled to remove all pentanes and lighter hydrocarbons using ASTM D 2001 which prescribes 120°F final vapor temperature at the top of the column. The 20.4 volume percent overhead product showed only a small amount of C_6 and heavier material in a GC analysis. About eight liters of depentanized gasoline were produced for use as basestock. RVP was measured by ASTM D 4953, the automated method.

Accomplishments: Results are reported at 70°F at the standard temperature of 100°F as follows :

Vapor Pressure, psi @ 70°F		Reid Vapor Pressure (psi @ 100°F)	
Hydrocarbon Blends	Ethanol Blends	Hydrocarbon Blends	Ethanol Blends
1. 1.45	5. 2.05	1. 4.2	5. 5.10
2. 5.10	6. 5.05	2. 9.70	6. 10.45
3. 4.35	7. 4.85	3. 9.60	7. 10.20
4. 5.10	8. 5.30	4. 9.40	8. 10.40

As demonstrated below the pressure elevation arising from ethanol addition was similar for blends containing butane or pentane.

It is conclusive that the average vapor pressure increase of 1.2 psi above the volumetric blending value attributable to ethanol is not affected by the identity of the light hydrocarbon used to control the vapor pressure of the blend. Within the variability of the measurements (±0.16 psi), neither pentane, butane, nor their blend reduces the "excess" vapor presure contribution of ethanol to gasoline blends.

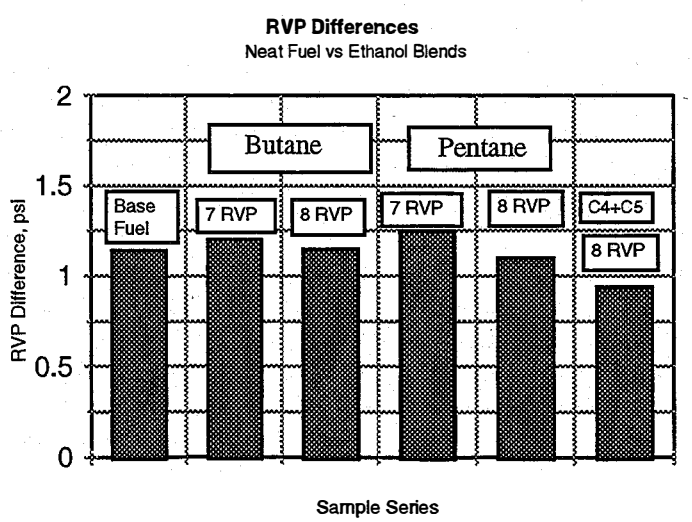

Program Title:	**Processing and Analysis of Diesel Fuel Fractions**
Sponsor:	National Renewable Energy Laboratory
Contract Number:	BN-1-10134-1
SwRI Project No.:	03-4089-330
Start/Complete Dates:	November 1990 - December 1991
Reports of Publication:	Miller, D.E., "Technical Assistance for the Alternative Fuels Evaluation Program," Final Report, SwRI San Antonio, Texas, Jan 22, 1992

PROGRAM SYNOPSIS

Technical Objectives: This work was a follow on for the fuels processing and analysis of project 02-8929. The project sought to identify measurable physical and structural properties of diesel fuels, separated into discrete boiling fractions, which correlate with engine performance and emissions. In addition to the hydrogenation of a straight run diesel, batch distillations of the straight run fuels into specific boiling point fractions, and ASTM analyses of the fuel and their respective distillate fraction, all standard ASTM analyses not completed for fuels in project 02-8929 were completed.

Approach: Feedstock Distillation - The DOE Alternative Fuel Center was used to distill a low-sulfur, straight-run diesel fuel and its low aromatic product into eight fractions, in roughly 40°F increments, ranging from 400°F to 740°F.

Analysis - The distillate fractions of feedstocks and product were analyzed according to a previously selected schedule of tests so that they may establish the fuel quality data for future engine emission/fuel quality correlations.

Hydrogenation - The straight-run diesel was hydrotreated to reduce aromatics to 10 volume percent aromatics. A low sulfur ambient aromatics product was not prepared since the sulfur concentration of the straight run diesel was low.

Distillation of Hydrotreated Feedstocks - The hydrotreated products from straight-run diesel, light coker gas oil, and light cycle oil were distilled using the DOE pilot plant in the same fashion as described in the distillation process and with the distillation cut point temperatures.

Analysis of Upgrade Fractions - The products from the distillation cuts of the hydrotreated feedstocks were analyzed as described in the above feedstock analysis.

Accomplishments: The straight-run diesel was successfully hydrogenated to reduce the aromatic concentration from 23.6 volume % to 9.8 volume %. The hydrogen severity was controlled using SwRI's UV method for real-time monitoring of the aromatics content of hydro-treated product. The straight-run diesel feedstock and the hydrotreated products from the straight-run, light coker gas oil, and light cycle oil were distilled to give fraction with the same distillation cut point temperatures used for the other diesel fuel in this ongoing study.

Program Title: Synthetic Fuel Center Operation

Sponsor: Martin Marietta Energy Systems, Inc., Oak Ridge National Laboratory for U.S. Department of Energy

Contract No.: 86X-22027C

SwRI Project No.: 02-8929

Start/Complete Dates: November 1985/December 1987

Reports or Publications: Sefer, N.R. and Bowden, J.N., "Shale Light Oil as a Diesel Fuel," Western Research Institute, Confab 86, Silver Creek, CO, July 23, 1986.

Sefer, N.R. and Erwin, J., "Synthetic Gasolines and Diesel Fuels From Processing of Shale Oils and Coal Liquids," Society of Automotive Engineers, International Fuels and Lubricants Meeting, Transactions, SAE Paper No. 861542, Philadelphia, PA, October 1986.

Erwin, J., Sefer, N.R., and Glavincevski, B., "Production and Analysis of EDS Coal-Derived Middle Distillate Test Fuels From Hydrogenation at Three Levels of Severity," Society of Automotive Engineers, 1987 International Fuels and Lubricants Meeting and Exposition, SAE Paper No. 872038, Toronto, Ontario, Canada, November 2, 1987.

PROGRAM SYNOPSIS

Technical Objectives: This work was the continuation of Contract DEAC01-84CE-50070 in which the Synthetic Fuel Center was established. The previous contract was responsible for 26 test fuels for 11 research projects and totaling 2490 gallons. The enumerated objectives of the statement of work, and special requests during the project, were directed toward supplying the research projects of the Alternative Fuels Utilization Project (AFUP) with test fuels having defined composition or properties. At other times, test fuels were made to conform to assessments of future fuels. In addition, full characterization of the test fuels and archiving of AFUP information was accomplished.

Approach: Test fuels were made from sources including shale, coal, and petroleum stocks. Specific fuel property problems were relieved or desired compositions obtained by a combination of blending and processing. The primary processing operation was catalytic hydrogenation, which was augmented by distillation, stripping, filtration, and other unit operations. At all times relevance to refinery practice and similarity to realistic fuel properties were observed.

Accomplishments: The test fuels made during the second contract segment of 2 years duration were more complex than in the first 3-year period and required more processing. Often multiple property adjustments were made, as for example, in the series of hydrogenated products made from EDS coal liquid shown in the photograph below. In all, 26 test fuels were prepared for 10 projects resulting in about 2010 gallons of fuel. The entire list of test fuels is given in the table on the reverse side. Many observations of product properties and processing conditions were made and reported during two contractor-coordination meetings and a fuels roundtable.

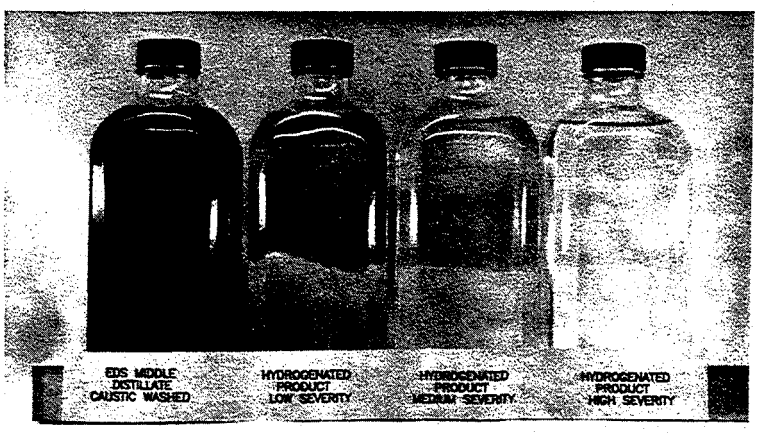

Hydrogenated products showing varying degrees of severity

Amount, Gallons	Type	Project Destination	Characteristics	Source	Description
50	Turbine fuel	NASA-Lewis	11.5 M% hydrogen	Caustic treated EDS middle distillate	Low severity hydrogenation to increase hydrogen content.
52	Diesel fuel blend	Pennsylvania State Univ.	50 vol% EDS/50 vol% D-2	Untreated EDS middle distillate	Blended to composition for 35 cetane number
			Unleaded Premium		
30	Low aromatics gasoline	Univ. of Tennessee	11.0 vol% aromatics	Petroleum stocks	Blended to range of aromatics with matched RVP and octanes
30	Medium aromatics gasoline	Univ. of Tennessee	24.5 vol% aromatics		
30	High aromatics gasoline	Univ. of Tennessee	34.0 vol% aromatics		
100	Coal-derived gasoline #1	Southern Illinois Univ.	Unleaded regular with coal-derived reformate and petroleum stocks	SRC-II naphtha	Processed coal naphtha and blended to specifications
140	Coal-derived gasoline #1	Univ. of Miami			
100	Coal-derived gasoline #2	Southern Illinois Univ.	Unleaded regular with coal-derived reformate and petroleum including cat cracked gasoline	SRC-II naphtha	Processed coal naphtha and blended to specifications
150	Coal-derived gasoline #2	Univ. of Miami			
53	Diesel fuel blend	Pennsylvania State Univ.	44 vol% EDS/56 vol% D-2	Caustic treated EDS middle distillate	Blended to match 35 cetane number of 50/50 blend
30	Coal-derived gasoline	Univ. of Tennessee	Unleaded premium with 24.3 vol% aromatics	SRC-II naphtha and petroleum stocks	Processed coal naphtha and blended to match medium aromatics
28	EDS product #1 (hydrotreated)	Pennsylvania State Univ.	38.2 cetane number	Caustic treated EDS middle distillate	High severity hydrogenation to increase cetane number
50	Shale diesel fuel	SwRI Division 03	Partially upgraded	Suntech/USAF	Diesel fraction distilled from mild hydrotreating of shale oil
100	Canadian 1990 diesel	SwRI Division 03 and Michigan Tech. Univ.	28 vol% tar sand stocks	Tar sands & petroleum	Blended by Canadian National Research Council
5					
160	Diesel fuel blend	SwRI Division 03 and Michigan Tech. Univ.	57 vol% EDS/43 vol% D-2	Caustic treated EDS	Blended to 33 cetane number
5					
			Hydrogen, M% / Aromatics, Vol%		
50	Coal-derived diesel fuel	Pennsylvania State Univ.	11.9 / 45.5	Caustic treated EDS	Series of fuels hydrogenated at three severity levels
50		18 gal. each severity	12.7 / 21.6		
50			13.1 / 10.2		
156	Alternative diesel test fuels	Ford Motor Co. and Rutgers University	Base fuel	Petroleum stocks from Phillips Petroleum	Diesel control fuel
20					
156			Alternative fuel #2		Light cycle oil
20					
156			Alternative fuel #1		Equal parts D 2/LCO
20					
47	Shale-derived test fuel	Not assigned	250 pm nitrogen	Caribou distillate shale crude (12300 ppm nitrogen)	Reduce nitrogen content for stable products
52	Series - diesel boiling range		730 ppm		
53			1890 ppm		
10	Shale Naphtha	Not assigned	140°-336°F Distillation	Indirect-heated Paraho Shale Oil	Controlled-severity hydrogenation of shale oil plus distillation
57	Shale Diesel Oil		396°-599°F Distillation		

Program Title:	**Hydrogenation of Caustic Washed Exxon Donor Solvent Middle Distillate**
Sponsor:	Martin Marietta Energy Systems
Contract Number:	37Y-52303V
SwRI Project No.:	02-8898
Start/Complete Dates:	October 1985 - January 1986

PROGRAM SYNOPSIS

Technical Objectives: To raise the hydrogen content of caustic-washed EDS middle distillate from 11.1 M % to around 12.0 M %. The EDS was caustic washed to remove phenolic compounds inappropriate in fuels.

Approach: Work was started by making two portions of hydrogenated EDS middle distillate with a hydrogen concentration above and below the target value of 12 wt. %. These two blendstocks were combined as required to make a drum of test fuel at the 12 wt. % hydrogen content. Consultation with the hydrogen catalyst manufacture resulted in operating conditions being selected to produce the desired severity of processing. In anticipation of the normal variability in operating conditions, two products will be made, which bracket 12 wt. % hydrogen. The products will be analyzed for actual hydrogen concentration and blended to the target value. Samples of the blended test fuel will be verified for correct hydrogen content before performing the specified laboratory characterization.

Accomplishments: The feed liquid was brown and was not transparent, while the hydrogenated product was water white. The overall hydrogen content of the product was 11.5 M%. In consultation with the experimenters at NASA, it was determined this product would be acceptable for their research if a companion blend of washed EDS and D2 were made to match the H/C atom ratio of the hydrotreated product. In addition to increasing the hydrogen content (and changing associated properties including cetane number, pour point, aromatic carbon distribution and energy content), the stability was improved and heteroatom concentration were reduced.

Program Title: Storage, Processing, Inspection, and Analysis of Petroleum Products Including Unfinished Fuels, Blends, and Synfuels

Sponsor: U.S. Department of Energy,
Office of Vehicle and Engine Research and Development

Contract No.: DEAC01-84CE-50070

SwRI Project No.: 02-7117

Start/Complete Dates: 7 June 1982 - 1 September 1985

Reports or Publications: Sefer, N.R. and Erwin, J., "Reforming and Hydrotreating of Shale- and Coal-Derived Products for Making Test Fuels," presented at the Windsor Workshop on Alternative Fuels, Energy, Mines, and Resources, Canada, June 24-26, 1985, Windsor, Ontario.

Sefer, N.R., Erwin, J., and Russell, J.A., "Synthetic Fuel Center Construction and Alternative Test Fuels Production," Final Report for Contract DE-AC01-84CE-50070, U.S. Department of Energy Report DOE/CS/50070-1, UC-96, Southwest Research Institute No. SwRI-7117/1, September 1985.

PROGRAM SYNOPSIS

Technical Objectives: The Synthetic Fuel Center was established by the Department of Energy as part of the Alternative Fuels Utilization Program. The main function was to provide test fuels in 5- to 500-gallon quantities for research projects on the utilization of alternative fuels.

Approach: Each test fuel required unique study and preparation. In all cases, the attempt was made to meet the test fuel experimental property and composition objectives while using stocks and techniques relevant to the current petroleum refining industry.

A hydrogenation pilot plant was installed in the new laboratory building shown below for handling synthetic feedstocks from oil shale and coal. Moderate-severity upgrading of shale oil was carried out, and the unit

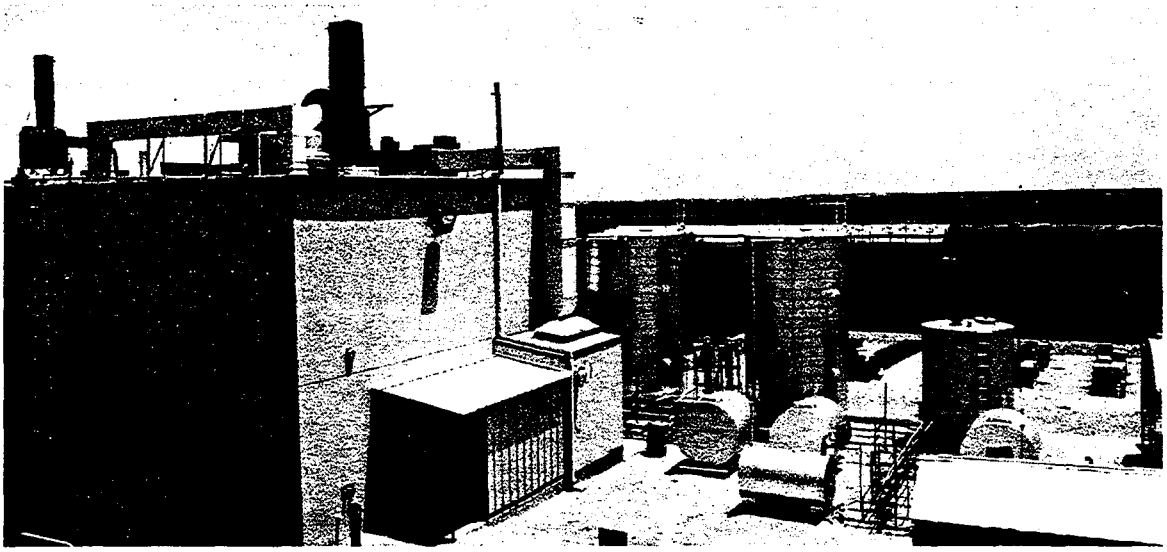

is capable of intermediate to high severity processing of shale oil and coal liquids. Catalytic reforming of shale-derived naphthas at low pressure raised the octane of these paraffinic materials from less than 50 to above 90 Research Octane Number. Other processing capabilities include distillation, adsorption, filtration, and centrifuging. Most test fuels required a blending step which was performed by rigorous technique.

Storage tanks from 500- to 10,000-gallon capacity were installed. These are connected through piping and a manifold to the processing unit and other tanks for storage or blending. Fuel blending to target properties or compositions was a major activity. Complete characterizations were made of all feedstocks and products.

Accomplishments: In the three-year report period, 26 fuels were prepared for 11 projects. Quantities ranged from 50 to 200-gallons of each fuel; the total production was 2,490 gallons. Starting materials for processing or blending included two shale oils, two shale-derived naphthas, and two coal-derived middle distillates. The table below lists the test fuels produced.

Amount, Gallons	Type	Project Destination	Characteristics	Processing Description
50 50 50 50	Diesel Fuel	Wisc. & Purdue	1-ring 42.6CN 2-ring 41.1CN 31.2CN 30.1CN	Blend of specification jet fuel and aromatic solvents selected by hydrocarbon type and blended to a target aromatic concentration.
110	Coal-Derived Diesel	Ricardo, Ltd.	Caustic extracted to reduce phenol in the SRC-II	Simulated coal-derived diesel fuel made from SRC-II middle distillate that was extracted with caustic to remove phenolic compounds.
110	Partially Upgraded	Ricardo, Ltd.	Suntech distilled residual from Air Force project	Diesel fuel made from partially upgraded (mild hydrotreating) shale oil distilled to diesel boiling range.
150 150 150	"Broadcut" D-2 SR Naphtha	MTI, Inc.	Blend to composition	Blended test fuel to give extended boiling range resembling a broad distillation cut from crude oil.
150 100	Gasoline No. 1 Shale 62V%	Univ. of Miami So. Illinois Univ.	Match unleaded Base Gasoline from Phillips	Distill shale-derived naphtha from Caribou. Cat reform 47 RON overhead cut to 91 RON. Blend to gasoline specs with alkylate plus butane.
150 100	Gasoline No. 2 Shale 52V%	Univ. of Miami So Illinois Univ.	Blend to match Gasoline No. 1 properties with controlled composition related to base gasoline	Similar to above with different shale naphtha from Caribou. Blend 90 RON reformate with different petroleum stocks.
200 200	Turbine fuel Turbine Fuel	Purdue Univ.	27.6 1-ring, 27.6 2-ring aromatic	Procure JP-7 base stock (2% aromatics) plus 1-ring and 2-ring aromatics concentrates to blend.
	Diesel Fuel	Univ. of Wisc.	Volatility Cetane	Assign quantitative values to low and high volatility and cetane. Devise blending approach, find suitable stocks, purchase, test and blend.
80			High High	
80			High Low	
80			Low Low	
80			Low High	
1200	Diesel Boiling Range	Multiple	Caustic extraction of phenolic compounds from EDS	Subcontract to Merichem in Houston. Transfer product from tank car at Kelly AFB and transport to and from Houston.
150	Gas Turbine Fuel	NASA-Lewis	Phillips D-2 Base Fuel	Order for direct shipment
50			EDS Extracted	Ship from inventory
50			EDS/D-2 Blend	Blend and ship
50			Canadian 1990 DF-2	Ship from inventory
50			Unleaded Gasoline	Buy and ship
50			Methanol	Buy and ship
50	Diesel Fuel	SwRI	High sulfur feed	Activate nickel-moly catalyst, practice hydrotreating at high pressure.
100	Diesel Fuel	AFLRL	Improved stability and engine deposits	Hydrotreat Oxy shale and to reduce nitrogen, sulfur and olefin contents.

Program Title:	**Refining and Engine Testing of Alternative Highway Transportation Fuels**
Sponsor:	Department of Energy
Contract No.:	AC01-79CS-50017
SwRI Project No.:	10-5640
Start/Complete Dates:	September 1979 to September 1982
Publications:	N.R. Sefer, et al., "Identification and Evaluation of Optimized Alternative Fuels," Proceedings of the 10th Automotive Technology Development Contractor Coordination Meeting by SAE, P-120, 1983.
	N.R. Sefer, J.A. Russell, T.W. Ryan III, T.J. Callahan, "Final Report for the Project Identification and Evaluation of Optimized Alternative Fuel," DOE/CS.50017-3, September 1982.

PROGRAM SYNOPSIS

Technical Objectives: Define chemical compositions and physical properties of alternative fuels derived from petroleum, coal, and shale oils. Formulate, blend, and produce R&D-scale quantities of prototype synthetic fuels. Identify problems associated with the use of these alternative fuels in conventional and advanced engines. Characterize promising fuel/engine combinations for minimum energy consumption in highway vehicle systems.

Approach: First, refinery models were developed in cooperation with Bonner & Moore Associates using their RPMS to represent composite refineries. Three regional models were used with forecasts of 1995 crude supply and product demand to generate baseline cases. Representative shale oils and coal liquids were added to the database, along with processing schemes for synthetic crudes. Computer cases were run to explore maximum diesel fuel, broadcut fuel, and oxygenate-gasoline blends in the Rocky Mountain, Mid-continent, and Great Lakes regions. The linear programming models optimized refinery operation and product blending to make specified products. Crude run was minimized in all cases to make the given product slate. The second phase of the project was fuel formulation and blending. Paraho shale oil products and SRC-II coal distillate were used alone and in blends with petroleum. Eight diesel fuels and seven broadcut fuels were made for use in testing. Eight gasolines and a base fuel were assembled for testing. Gulf supplied the base gasoline and its blend with 5 volume percent methyl aryl ethers. Mobil provided their MTG (Methanol to Gasoline) product. One methanol blend was prepared using the base gasoline. The five other blends were a simulated coal-derived (SCD) gasoline and modifications of that product blended with methanol, ethanol, and MTBE.

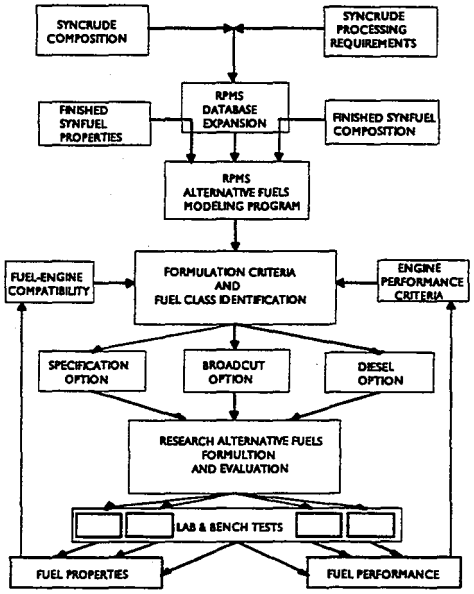

Identification, Formulation and Evaluation of Alternative Highway Fuels

Accomplishments: The studies showed how 300,000 B/D shale oil and 200,000 B/D coal liquids may be used with petroleum crudes in the three regions. Results included a wide variety of product compositions to select from to use in preparation of blends. The studies also showed that shale oil and coal liquids would replace nearly equivalent volumes of petroleum raw materials. Both the maximum diesel fuel and broadcut fuel options saved raw materials and refining energy. This benefit would be limited at the amount of diesel fuel made, but broadcut fuel production could be increased. The use of ethanol, methanol, or MTBE in gasoline was also beneficial.

Program Title: Identification of Probable Automotive Fuels Composition: 1985-2000

Sponsor: Department of Energy

Contract No.: EY-76-C-04-3684

SwRI Project No.: 10-4658

Start/Complete Dates: September 1976/February 1978

Reports or Publications: Russell, J. A., et al., "Identification of Probable Automotive Fuels Composition: 1985-2000," Final Report, prepared by Mobile Energy Division, Southwest Research Institute, Contract No. EY-76-C-04-3684, U. S. Department of Energy, Document No. HCP/W3684-01/1, May 1978.

PROGRAM SYNOPSIS

Technical Objectives: Develop a methodology to project the compositions of finished automotive fuels derived from oil shale and coal for the time frame 1985-2000.

Approach: The principal factors and activities in the production of automotive fuels which have synthetic hydrocarbon constituents and alcohol fuels derived from coal are traced and discussed in detail. These include selection of reference raw materials, syncrude compositions for a variety of candidate conversion processes, and finished automotive fuels composition based upon domestic fuel demand projections for the time frame 1985-2000. In addition, those fuel-engine relationships pertinent to developing optimized automotive systems are discussed in relation to anticipated developments in propulsion systems technology.

Accomplishments: A projective methodology was developed around the Bonner and Moore Refinery and Petrochemical Modeling System (RPMS), a linear programming system dependent on knowledge of syncrude composition, refinery configuration, and product slate. This approach is sufficiently comprehensive and flexible to provide increased projective accuracy as compositions of syncrudes from oil shale and coal become better defined.

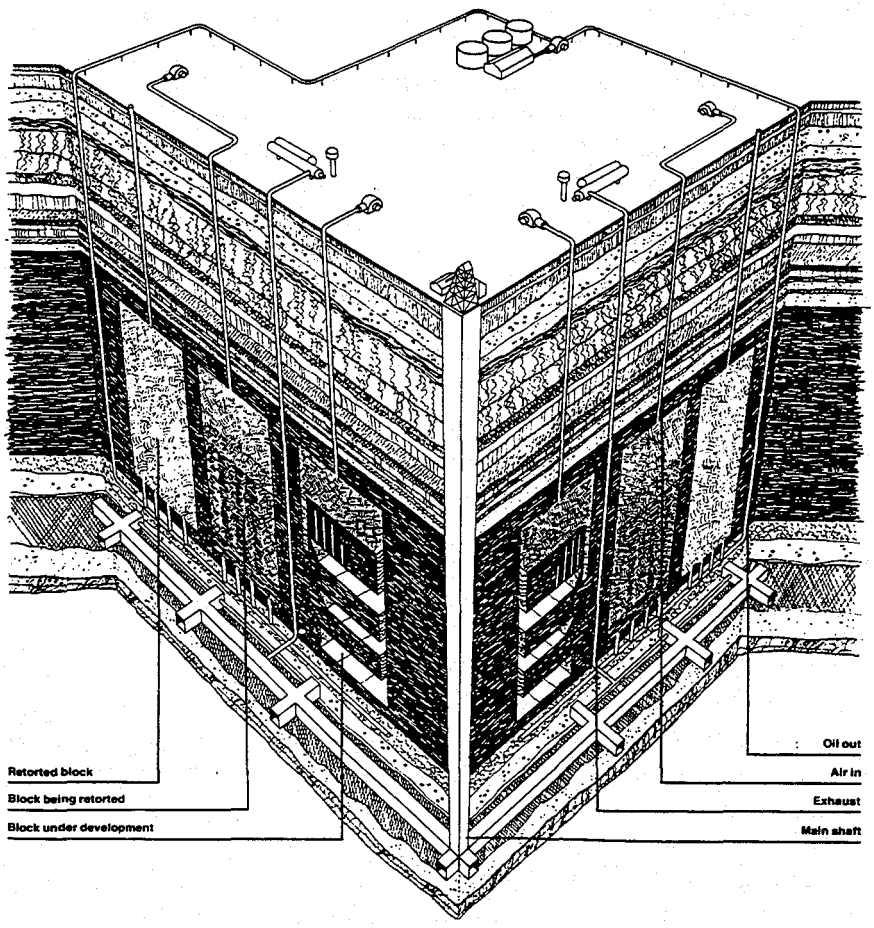

REPORT DOCUMENTATION PAGE

Form Approved
OMB NO. 0704-0188

Public reporting burden for this collection of information is estimated to average 1 hour per response, including the time for reviewing instructions, searching existing data sources, gathering and maintaining the data needed, and completing and reviewing the collection of information. Send comments regarding this burden estimate or any other aspect of this collection of information, including suggestions for reducing this burden, to Washington Headquarters Services, Directorate for Information Operations and Reports, 1215 Jefferson Davis Highway, Suite 1204, Arlington, VA 22202-4302, and to the Office of Management and Budget, Paperwork Reduction Project (0704-0188), Washington, DC 20503.

1. AGENCY USE ONLY (Leave blank)	2. REPORT DATE	3. REPORT TYPE AND DATES COVERED
	August 1994	Final Report: August 5, 1993–August 4, 1994

4. TITLE AND SUBTITLE

Maintenance and Operation of the U.S. DOE Alternative Fuel Center

5. FUNDING NUMBERS

(C) XS-2-12130-1
(TA) FU521010

6. AUTHOR(S)

J. Erwin, J.L. Ferrill, and D.L. Hetrick

7. PERFORMING ORGANIZATION NAME(S) AND ADDRESS(ES)

Southwest Research Institute
P.O. Drawer 28510
San Antonio, TX 78228-0510

8. PERFORMING ORGANIZATION REPORT NUMBER

DE95013146

9. SPONSORING/MONITORING AGENCY NAME(S) AND ADDRESS(ES)

National Renewable Energy Laboratory
1617 Cole Boulevard
Golden, CO 80401-3393

10. SPONSORING/MONITORING AGENCY REPORT NUMBER

NREL/TP-425-20245

11. SUPPLEMENTARY NOTES

12a. DISTRIBUTION/AVAILABILITY STATEMENT

National Technical Information Service
U.S. Department of Commerce
5285 Port Royal Road
Springfield, VA 22161

12b. DISTRIBUTION CODE

UC-1504

13. ABSTRACT *(Maximum 200 words)*

The Alternative Fuels Utilization Program (AFUP) of the Office of Energy Efficiency and Renewable Energy has investigated the possibilities and limitations of expanded scope of fuel alternatives and replacement means for transportation fuels from alternative sources. Under the AFUP, the Alternative Fuel Center (AFC) was created to solve problems in the DOE programs that were grappling with the utilization of shale oil and coal liquids for transportation fuels. In year one of this contract, a timeline was set to coordinate uses and operations of the AFC hydrogenation pilot plant among test fuels production project work, facility maintenance, other government work, and work for industry for second-generation operations. In year two, consistent with assisting the AFUP in accomplishing its general goals, the work was done with fuel producers, regulators, and users in mind. AFC capabilities and results were disseminated through tours and outside presentations.

14. SUBJECT TERMS

Alternative fuels, transportation fuels, hydrogenation plant, pilot plant, fuels production

15. NUMBER OF PAGES

51

16. PRICE CODE

17. SECURITY CLASSIFICATION OF REPORT	18. SECURITY CLASSIFICATION OF THIS PAGE	19. SECURITY CLASSIFICATION OF ABSTRACT	20. LIMITATION OF ABSTRACT