November 1995 • NREL/TP-472-7332a

Home Energy Rating System Building Energy Simulation Test (HERS BESTEST)

Volume 1
Tier 1 and Tier 2 Tests User's Manual

Click Here for Volume 2

Click Here for Volume 1 Supporting Files

Ron Judkoff
Joel Neymark

National Renewable Energy Laboratory
1617 Cole Boulevard
Golden, Colorado 80401-3393
A national laboratory of the U.S. Department of Energy
Managed by Midwest Research Institute
for the U.S. Department of Energy
under contract No. DE-AC36-83CH10093

NREL/TP-472-7332a

Home Energy Rating System Building Energy Simulation Test (HERS BESTEST)

Volume 1
Tier 1 and Tier 2 Tests User's Manual

Ron Judkoff
Joel Neymark

National Renewable Energy Laboratory
1617 Cole Boulevard
Golden, Colorado 80401-3393
A national laboratory of the U.S. Department of Energy
Managed by Midwest Research Institute
for the U.S. Department of Energy
under contract No. DE-AC36-83CH10093

Prepared under Task No. BE51.4101

November 1995

This work is divided into two volumes. Volume 1 contains the test cast specifications and is a user's manual for anyone wishing to test a computer program. Volume 2 contains the reference results and suggestions for accrediting agencies on how to use and interpret the results.

Neither the U.S. Department of Energy, the National Renewable Energy Laboratory, nor the authors of this report can be held responsible for any misfortunes caused by the use of the HERS BESTEST example pass/fail criteria in your certification program.

NOTICE

This report was prepared as an account of work sponsored by an agency of the United States government. Neither the United States government nor any agency thereof, nor any of their employees, makes any warranty, express or implied, or assumes any legal liability or responsibility for the accuracy, completeness, or usefulness of any information, apparatus, product, or process disclosed, or represents that its use would not infringe privately owned rights. Reference herein to any specific commercial product, process, or service by trade name, trademark, manufacturer, or otherwise does not necessarily constitute or imply its endorsement, recommendation, or favoring by the United States government or any agency thereof. The views and opinions of authors expressed herein do not necessarily state or reflect those of the United States government or any agency thereof.

Available to DOE and DOE contractors from:
Office of Scientific and Technical Information (OSTI)
P.O. Box 62
Oak Ridge, TN 37831
Prices available by calling 423-576-8401

Available to the public from:
National Technical Information Service (NTIS)
U.S. Department of Commerce
5285 Port Royal Road
Springfield, VA 22161
703-605-6000 or 800-553-6847
or
DOE Information Bridge
http://www.doe.gov/bridge/home.html

Printed on paper containing at least 50% wastepaper, including 10% postconsumer waste

Acknowledgments

In developing the Home Energy Rating System (HERS) Building Energy Simulation Test (BESTEST) we ran two field tests with early versions. We would like to thank the following people for participating in those field tests, providing us with their results, and providing comments:

Evan Brown, Energy Rated Homes of America
Jeanne Byrne, Pacific Gas & Electric
Bud Heiss, Columbus Southern Power
Jim Neukam, Texas Gas Transmission Corp.
Scott Roberts, Architectural Energy Corp.
Robert Scott, California Home Energy Efficiency Rating System
Charles Segerstrom, Pacific Gas & Electric/CHEERS
Dwight Shuler, Owens Corning Fiberglass Corp.
Dick Tracey, D&R International.

The authors also wish to thank past and current HERS Council Technical Committee members for providing guidance during this project:

Dick Bahn, Chairman, Honeywell, Inc.
Dick Tracey, Co-Chairman, D&R International
Cindy Baxter, Oregon Department of Energy
Evan Brown, Energy Rated Homes of America
Robert Brown, National Conference of States on Building Codes and Standards
Matthew Chwalowski, Edison Electric Institute
Frank Denney, Alabama Power Co.
Robert Egan, Washington Gas Co.
Chris Fennel, National Conference of States on Building Codes and Standards
Bud Heiss, Columbus Southern Power
Michael Holtz, Architectural Energy Corporation
Richard Holtz, RRH Associates
Bion Howard, The Alliance to Save Energy
Jack Laverty, COAD
Neil Leslie, Gas Research Institute
Duncan Prahl, Western Massachusetts Electric Company/Energy Crafted Home
Henry Rutkowski, Air Conditioning Contractors of America
Charles Segerstrom, Pacific Gas & Electric Company/CHEERS,

We also thank the following HERS Council Technical Committee Advisory Members:

Harold Crowder Jr., Virginia Power
Richard Faesy, Energy Rated Homes of Vermont
Jim Neukam, Texas Gas Transmission
Martin Petchul, Columbia Gas Transmission
Andrew Sinclair, Carrier Corporation
Doug Swartz, City of Fort Collins Light & Power

Finally, we appreciate the efforts of current and past Department of Energy (DOE) program managers for this project, including Jean Boulin, Lou Divone, Mary Margaret Jenior, Jake Kaminsky, and Robert Mackie.

Table of Contents

Page

VOLUME 1

Abbreviations and Acronyms for Volume 1 and Volume 2

Background

1.0 Introduction . . . 1
1.1 Performing the Tests . . . 2
1.1.1 Input Requirements . . . 2
1.1.2 Modeling Rules . . . 2
1.1.3 Output Requirements . . . 2
1.1.4 Comparing Your Output to the Reference Results . . . 5
1.2 Advice to Certifying Agency . . . 5
1.2.1 Example Pass/Fail Criteria . . . 5

2.0 Specific Input Information . . . 7
2.1 Weather Data . . . 7
2.2 The Base Case Building (Case L100A) . . . 10
2.2.1 Attic . . . 10
2.2.2 Vented Crawl Space . . . 11
2.2.3 Windows . . . 11
2.2.4 Interior Walls . . . 11
2.2.5 Infiltration . . . 11
2.2.6 Internal Loads . . . 12
2.2.7 Combined Radiative and Convective Surface Coefficients . . . 12
2.2.8 Surface Radiative Properties . . . 12
2.2.9 Interior Solar Distribution . . . 12
2.2.10 Mechanical System . . . 12
2.2.10.1 Thermostat Control Strategies . . . 13
2.2.10.2 Equipment Characteristics . . . 13
2.2.11 Case L100A: Supplementary Tables . . . 23
2.3 The Tier 1 Test Cases . . . 33
2.3.1 Case L110A: High Infiltration (1.5 ACH) . . . 33
2.3.2 Case L120A: Well Insulated Walls and Roof . . . 34
2.3.2.1 Case L120A: Supplementary Tables . . . 37
2.3.3 Case L130A: Double-Pane Low-Emissivity Window with Wood Frame . . . 40
2.3.4 Case L140A: Zero Window Area . . . 46
2.3.5 Case L150A: South-Oriented Windows . . . 47
2.3.6 Case L155A: South-Oriented Windows with Overhang . . . 51
2.3.7 Case L160A: East- and West-Oriented Windows . . . 54
2.3.8 Case L170A: No Internal Loads . . . 57
2.3.9 Case L200A: Energy Inefficient . . . 57
2.3.9.1 Case L200A: Supplementary Tables . . . 60
2.3.10 Case L202A: Low Exterior Solar Absorptance Associated with Light Exterior Surface Color . . . 63

Table of Contents (Continued)

Page

2.3.11 Slab-on-Grade Series (Cases L302A and L304A) 64
2.3.11.1 Case L302A: Slab-on-Grade, Uninsulated ASHRAE Slab 64
2.3.11.2 Case L304A Slab-on-Grade, Insulated ASHRAE Slab 67
2.3.12 Basement Series (Cases L322A and L324A) 70
2.3.12.1 Case L322A: Uninsulated ASHRAE Conditioned Basement 70
2.3.12.2 Case L324A: Interior Insulation Applied to Uninsulated ASHRAE Conditioned Basement Wall 78
2.4 Tier 2 Test Cases 84
2.4.1 Case L165A: East/West Shaded Windows 84
2.4.2 Case P100A: Passive Solar Base Case 87
2.4.2.1 Case P100A: Supplementary Tables 94
2.4.3 Case P105A: Passive Solar with Overhang 100
2.4.4 Case P110A: Low-Mass Version of Case P100A 103
2.4.5 Case P140A: Zero Window Area Version of Case P100A 107
2.4.6 Case P150A: Even Window Distribution Version of Case P100A 109

Appendices
Appendix A: TMY Weather Data Format Description 114
Appendix B: Infiltration and Fan Adjustments for Altitude 121
Appendix C: Exterior Combined Radiative and Convective Surface Coefficients 123
Appendix D: Infrared Portion of Surface Coefficients 124
Appendix E: Detailed Calculation of Solar Lost Due to Cavity Albedo 127
Appendix F: Distribution of Solar Radiation in the Passive Solar Base Case (P100A) 131
Appendix G: Detailed Ground Coupling Analysis Case Descriptions for Cases L302B, L304B, L322B, and L324B 133
Appendix H: Procedure for Developing Example Pass/Fail Criteria 138

References, Volume 1 and Volume 2 142

List of Tables

Page

1-1 HERS BESTEST Case Descriptions—Tier 1 and Tier 2 Tests 3
1-2 HERS BESTEST Tier 1 Output Requirements 4
1-3 HERS BESTEST Tier 2 Output Requirements 4
2-1 Colorado Springs, Colorado, Climate Summary 8
2-2 Las Vegas, Nevada, Climate Summary 9
2-3 Building Thermal Summary—Case L100A 21
2-4 Other Building Details—Case L100A 22
2-5 Component Surface Areas and Solar Fractions—Case L100A 24
2-6 Material Descriptions Exterior Wall, Door, and Window—Case L100A 25
2-7 Material Descriptions, Floor Over Vented Crawl Space—Case L100A 26
2-8 Material Descriptions, Ceiling, Attic, and Roof—Case L100A 27
2-9 Material Descriptions, Ceiling/Attic/Roof, Attic as Material Layer—Case L100A 28
2-10 Material Descriptions, Interior Wall—Case L100A 29
2-11 Internal Loads Schedule—Case L100A 29
2-12 Gross Window Summary, Single Pane Aluminum Frame with Thermal Break—Case L100A 30
2-13 Glazing Summary, Single Pane Center of Glass Values—Case L100A 31
2-14 Optical Properties as a Function of Incidence Angle for Single-Pane Glazing—Case L100A 32
2-15 Conditioned Zone Infiltration for Case L110A 33
2-16 Building Thermal Summary—Case L120A 36
2-17 Component Surface Areas and Solar Fractions—Case L120A 37
2-18 Material Descriptions, Exterior Wall—Case L120A 38
2-19 Material Descriptions, Ceiling—Case L120A 38
2-20 Material Descriptions for Attic as Material Layer—Case L120A 39
2-21 Building Thermal Summary—Case L130A 41
2-22 Advanced Window (Double-Pane, Low-E, Argon Fill, Wood Frame, Insulated Spacer)—Case L130A 42
2-23 Low-E Glazing System with Argon Gas Fill Glazing Summary (Center of Glass Values)—Case L130A 43
2-24 Optical Properties as a Function of Incidence Angle for Low-Emissivity Double-Pane Glazing—Case L130A 44
2-25 Component Solar Fractions—Case L130A 45
2-26 Building Thermal Summary—Case L140A 46
2-27 Component Surface Areas—Case L140A 46
2-28 Building Thermal Summary—Case L150A 50
2-29 Surface Component Areas and Solar Fractions—Case L150A 50
2-30 Building Thermal Summary—Case L160A 56
2-31 Surface Component Areas and Solar Fractions—L160A 56
2-32 Building Thermal Summary—Case L200A 59
2-33 Material Descriptions, Exterior Wall—Case L200A 61
2-34 Material Descriptions, Floor Above Vented Crawl Space—Case L200A 61
2-35 Material Descriptions, Ceiling—Case L200A 62
2-36 Material Descriptions, Ceiling with Attic as Material Layer—Case L200A 62
2-37 Building Thermal Summary—Case L302A 66
2-38 Material Descriptions, Slab-On-Grade Floor—Case L302A 66
2-39 Building Thermal Summary—Case L304A 69

List of Tables (Continued)

		Page
2-40	Material Descriptions, Slab-On-Grade Floor—L304A	69
2-41	Building Thermal Summary—Case L322A	74
2-42	Basement Component Surface Areas—Case L322A	75
2-43	Material Descriptions, Basement Wall—Case L322A	76
2-44	Material Descriptions, Basement Floor—Case L322A	77
2-45	Material Descriptions, Interior Main Floor/Basement Ceiling—Case L322A	77
2-46	Building Thermal Summary—Case L324A	81
2-47	Component Surface Areas—Case L324A	82
2-48	Material Descriptions, Basement Wall—Case L324A	83
2-49	Building Thermal Summary—Case P100A	93
2-50	Component Surface Areas of Solar Fractions—Case P100A	95
2-51	Material Descriptions, Floor Over Vented Crawl Space—Case P100A	96
2-52	Material Descriptions, Interior Mass Wall—Case P100A	96
2-53	Gross Window Summary Double-Pane, Clear, Wood Frame Window—Case P100A	97
2-54	Glazing Summary Clear Double Pane Center-of-Glass Values—Case P100A	98
2-55	Optical Properties as a Function of Incidence Angle for Clear Double-Pane Glazing—Case P100A	99
2-56	Building Thermal Summary—Case P110A	105
2-57	Component Surface Areas and Solar Fractions—Case P110A	106
2-58	Material Descriptions—Case P110A	106
2-59	Building Thermal Summary—Case P140A	108
2-60	Component Surface Areas—Case P140A	108
2-61	Building Thermal Summary—Case P150A	111
2-62	Component Surface Areas and Solar Fractions—Case P150A	112
A-1	Typical Meteorological Year Data Format	115
B-1	Infiltration Rate Adjustments for Altitude	122
D-1	Disaggregated Film Coefficients for Opaque Surfaces	125
D-2	Disaggregated Film Coefficients for Windows and Window Frames	126
E-1	Calculation of Solar Lost (Cavity Albedo)	128
F-1	Interior Surface Distribution of Solar Radiation for Case P100A	132
G-1	Material Descriptions, Slab on Grade Floor—Case L302B	134
G-2	Material Descriptions, Slab on Grade Floor—Case L304B	135
G-3	Material Descriptions, Basement Below Grade Wall and Slab Floor—Case L322B	136
G-4	Material Descriptions, Basement Below Grade Wall—L324B	137
H-1	Example Pass/Fail Criteria Using Fictitious Results	139

List of Figures

Page

2-1 Base building axonometric 14
2-2 Floor plan—Case L100A 15
2-3 East side elevation—Case L100A 16
2-4 Exterior wall plan section—Case L100A 17
2-5 Floor above vented crawl space, section—Case L100A 17
2-6 Ceiling/attic/roof section—Case L100A 18
2-7 Interior wall plan section—Case L100A 19
2-8 Window detail, vertical slider (NFRC AA) with 2¾"-wide frame—Case L100A 20
2-9 Exterior wall plan section—Case L120A 35
2-10 Ceiling section—Case L120A 35
2-11 Exterior wall and south window locations—Case L150A 48
2-12 South wall elevation—Case L150A 49
2-13 South overhang—Case L155A 52
2-14 Example model of south wall for simulating south overhang effect in Case L155A 53
2-15 East and west window locations—Case L160A 55
2-16 East/West wall elevation—Case L160A 55
2-17 Exterior wall plan section—Case L200A 58
2-18 Floor above vented crawl space, section—Case L200A 58
2-19 Ceiling section—Case L200A 59
2-20 Uninsulated slab on grade, section—Case L302A 65
2-21 Slab on grade with foundation wall exterior insulation, section—Case L304A 68
2-22 Basement series base building, section and plan 72
2-23 Basement wall and floor section—Case L322A 73
2-24 Insulated basement wall and rim joist section—Case L324A 79
2-25 Insulated basement wall plan section—Case L324A 80
2-26 Overhang and fins for east and west windows—Case L165A 85
2-27 Overhang and fins for east and west windows alternate arrangement—Case L165A 86
2-28 Window, door, and mass wall locations—Case P100A 90
2-29 Mass floor above vented crawl space, section—Case P100A 91
2-30 Interior mass wall section—Case P100A 91
2-31 Window detail, vertical slider 30" wide by 78" high with 2¾" frame—Case P100A 92
2-32 South overhang—Case P105A 101
2-33 Example model of south wall for simulating south overhang effect in Case P105A 102
2-34 Floor above vented crawl space, section—Case P110A 104
2-35 Window locations—Case P150A 110
E-1 Shape factor for adjacent rectangles in perpendicular planes sharing a common edge . . . 129
E-2 Shape factor for directly opposed rectangles 129

Acronyms and Abbreviations - Volume 1 and Volume 2

A	Area
Abs	Absorptance
Abs In	Inner pane absorptance
Abs Out	Outer pane absorptance
ACH	Air changes per hour
AFUE	Annual Fuel Utilization Efficiency
ASHRAE	American Society of Heating, Refrigerating, and Air-Conditioning Engineers
AVG DIST	Exterior wall area weighted window distribution
Base	Base case
BESTEST	Building Energy Simulation Test
Bsmt, Ins	Basement coupled to ground with 2x4 16" o.c. R-11 insulated wall on interior side of poured concrete wall
Bsmt, Unins	Uninsulated basement coupled to ground
C_p	Specific heat
CFM	Cubic feet per minute
Coef	Coefficient
COG	Center of glass
COP	Coefficient of performance
D	Door 3' x 6'8"
dir nor	Direct normal
DLEW	Double pane, low-e window with wood frame and insulated spacer
DOE	Department of Energy
DW	Double pane, clear window with wood frame and metal spacer
EEM	Energy Efficient Mortgage
E/W-Sha	East/West window orientation with overhangs and fins
E/W-Win	East/West window orientation
E,W,N,S	East, West, North, South.
EOG	Edge of glass
H	Horizontal overhang projecting perpendicular to window surface.
Heatcap	Heat capacity
Hemis	Hemispherical
HERS	Home Energy Rating System
HUD	Housing and Urban Development
HV	Horizontal overhangs and vertical fins projecting perpendicular to window surface.
HVAC	Heating, Ventilating and Air-Conditioning
IEA	International Energy Agency
Ineff	Inefficient building
Infiltr	Infiltration (natural ventilation)
Infl	High infiltration rate
Ins	Well insulated
INSUL	Slab on Grade or Basement with enough insulation to effectively decouple the slab from the ground
Int	Interior
k	Thermal conductivity
LCR	Load to collector area ratio
Low abs	Exterior solar absorptance = 0.2 for selected surfaces
Low-E	Low emissivity
Max	Maximum
Min	Minimum

N/A	Not applicable
NAHB	National Association of Home Builders
NFRC	National Fenestration Rating Council
NREL	National Renewable Energy Laboratory
O.C.	On centers
Orient	Orientation
Pas Base	Passive solar base case
Pas Lo-mass	Passive solar with low mass
Pas N/S/E/W	Passive solar with exterior wall area weighted window distribution
Pas S-Sha	Passive solar with overhang
Pas 0-Win	Passive solar with no windows
Prop	Property
R	Unit thermal resistance
Ref	Reference result
Refl	Reflectance
S-Sha	South window orientation with overhang
S-Win	South window orientation
SATB	Single pane window with aluminum frame and thermal break
SC	Shading coefficient
S.GL.A	Net south glass area (excluding window frames)
Shade	Window shading device; horizontal overhang and/or vertical fins.
SHGC	Solar heat gain coefficient
SLAB	Slab on grade
Slab, Ins	Slab on grade with 4 ft deep perimeter slab insulation
Slab, Unins	Uninsulated slab on grade coupled to ground
Surf	Surface
TMY	Typical Meteorological Year
Trans	Transmittance
T1	Tier 1
T2	Tier 2
U	Unit thermal resistance or overall heat transfer coefficient
UA	Thermal conductance
UA_{inf}	Equivalent thermal conductance due to infiltration
UNINS	Slab on grade or basement coupled to ground
UV	Ultraviolet
Val	Value
VC	Vented crawl space
W	Window, 3' x 5'
W_p	Window 2'6" x 5'5"
0-Int	No internal gains
0-Win	No windows
1.0 S	All windows are on the south wall
90% conf	90% confidence interval
α_{ext}	Exterior solar absorptance

Background

In 1991, the Department of Energy (DOE), in cooperation with the Department of Housing and Urban Development (HUD), initiated a collaborative process to define a residential energy efficiency rating program linked with energy-efficient mortgage (EEM) financing. During this process, the collaborative, consisting of a broad-based group representing stakeholder organizations, identified the need for quality control procedures to evaluate and verify the energy prediction methods used by Home Energy Rating System (HERS) providers. Such procedures were needed so that a variety of locally developed rating systems would have equal opportunity to qualify under the umbrella of a national HERS/EEM system by meeting minimum technical requirements (National Renewable Energy Laboratory (NREL)).

On October 26, 1992 the Energy Policy Act was signed into law. The section on Residential Energy Efficiency Rating Guidelines called for negotiated voluntary rulemaking with private sector groups having a stake in Residential Energy Rating Systems. The act confirmed the need for technical quality control and called for the creation of a set of guidelines for HERS. The act also called for establishing "protocols and procedures for certification of the technical accuracy of building energy analysis tools used to determine energy efficiency ratings."

In 1994 the HERS Council was incorporated under the laws of Maryland as a 501C nonprofit corporation. The council is a broad-based organization with more than 100 member organizations representing all groups identified in the legislation and other stakeholder groups. NREL was directed by DOE to work closely with the HERS Council and, in accordance with the legislation, to develop the guidelines and the technical basis for software certification. This document is a result of that effort.

NREL had already developed the theoretical basis for this type of building energy software testing in cooperation with the International Energy Agency (IEA) (Judkoff and Neymark). NREL led a group consisting of experts from the IEA Solar Heating and Cooling Program Task 12b and the IEA Buildings and Community Systems Program Task 21c. The 5-year international research effort resulted in a software testing methodology that is being adopted by the American Society of Heating, Refrigerating, and Air Conditioning Engineers (ASHRAE), Canada, Britain, Finland, Belgium, France, Italy, Spain, Sweden, the United States, the California Energy Commission, and the HERS Council.

This type of software testing based on intermodel comparisons forms one portion of an overall validation methodology that was first developed at NREL in 1983 and that has been further refined since then by NREL and a number of European researchers (Bloomfield, Bowman and Lomas, Irving, Judkoff, Judkoff and Neymark, Judkoff et al., Lomas). The overall validation methodology consists of three parts:

- Analytical Verification - in which the output from a program, subroutine, or algorithm is compared to the result from a known analytical solution for isolated heat transfer mechanisms under very simple boundary conditions

- Empirical Validation - in which calculated results from a program, subroutine, or algorithm are compared to monitored data from a real structure, test cell, or laboratory experiment

- Comparative testing - in which a program is compared to itself or to other programs. The comparative approach includes "sensitivity testing" and "intermodel comparisons."

Comparative testing as applied in the HERS Building Energy Simulation Test (BESTEST) method includes a set of public domain reference programs that have already been subjected to extensive analytical, empirical, and intermodel testing. In addition to the software testing procedures described in this document, the HERS Council Guidelines, and DOE 10 CFR Part 437 require collection of utility bill

data for further checking and improvement of the building energy prediction tools used by HERS providers. NREL anticipates further development of empirical validation methods appropriate for testing HERS software. NREL also anticipates further development of comparative testing methods appropriate for HERS software.

1.0 Introduction

Home Energy Rating System (HERS) Building Energy Simulation Test (BESTEST) is a method for evaluating the credibility of building energy software used by Home Energy Rating Systems. The method provides the technical foundation for "certification of the technical accuracy of building energy analysis tools used to determine energy efficiency ratings" as called for in the Energy Policy Act of 1992 (Title I, Subtitle A, Section 102, Title II, Part 6, Section 271). Certification is accomplished with a uniform set of test cases that facilitate the comparison of a software tool with several of the best public-domain, state-of-the-art building energy simulation programs available in the United States. This set of test cases represents the Tier 1 and Tier 2 Tests for Certification of Rating Tools as described in DOE 10 CFR Part 437, and the HERS Council *Guidelines for Uniformity* (HERS Council).

The Tier 1 tests consist of a basic house with typical glazing and insulation. Specific cases are designed to test a building energy computer program with respect to the following components of heat and mass transfer:

- Infiltration
- Wall and ceiling R-Value
- Glazing physical properties, area, and orientation
- South overhang
- Internal loads
- Exterior surface color
- Energy inefficient building
- Crawl space
- Uninsulated and insulated slab
- Uninsulated and insulated basement.

The Tier 2 tests consist of the following additional elements related to passive solar design:

- Variation in mass
- Glazing orientation
- East and west shading
- Glazing area
- South overhang.

A third Tier of tests not included in this document is also planned as described in the *HERS Council Guidelines.* These are anticipated to include:

- Domestic water heating
- Utility rate structures including demand
- HVAC simulation
- Solar water heating
- Sunspace
- Thermostat set-back and set-up
- Trombe wall
- Whole house fan

To help avoid user input errors, we have tried to keep the input for the test cases simple, while remaining as close as possible to "typical" constructions and thermal and physical properties. For this reason, we have followed as closely as possible typical building descriptions and physical properties published by sources such as the National Association of Home Builders (NAHB), the U.S. Department of Energy

(DOE), American Society of Heating Refrigerating and Air Conditioning Engineers (ASHRAE), and the National Fenestration Rating Council (NFRC).

The theoretical basis for HERS BESTEST is described in detail in the final report of International Energy Agency (IEA) Solar Heating and Cooling Task 12b, and Conservation Task 21c (Judkoff and Neymark).

This work is divided into two volumes. Volume 1 contains the test case specifications and is a user's manual for anyone wishing to test a computer program. Volume 2 contains the reference results and suggestions for accrediting agencies on how to use and interpret the results.

The diskette included with volume 1 contains the following:

- WEATHER.ZIP (compressed TMY weather data for Colorado Springs, Colorado, and Las Vegas, Nevada)
- PKUNZIP.EXE (decompression utility)
- README.TXT (directions for weather data decompression).

1.1 Performing the Tests

1.1.1 Input Requirements

Table 1-1 is a summary of the various parametric cases contained in HERS BESTEST and indicates which tests are Tier 1 (T1) and which tests are Tier 2 (T2). This table is provided only as an overview; use Section 2 to generate input to your HERS tool. We recommend a quick look at Table 1-1 now to briefly get acquainted with the base building and various other cases. Two climates will be used: Colorado Springs, Colorado, which is a clear, cold climate, and Las Vegas, Nevada, which is a hot, dry climate. More detail on weather data is provided in Section 2.1.

1.1.2 Modeling Rules

- **Use the most detailed level of modeling your tool will allow.**

- **In some instances the specification will include input values that do not apply to the input structure of your tool. For example, your tool may calculate window solar transmittance based on input of physical properties of glass or based on shading coefficient. When this occurs either use approximation methods suggested in your users manual, or <u>simply disregard the nonapplicable inputs</u> and continue. Such inputs are in the specification for those programs that may need them.**

1.1.3 Output Requirements

For the Tier 1 and Tier 2 Tests, generate output for comparison to the reference results as shown in Table 1-2 and Table 1-3 respectively. Note in Table 1-3 for cases P100A through P150A that the climate for generating cooling load outputs is Colorado Springs, Colorado, rather than the Las Vegas, Nevada, climate required for the other cases. This is because the passive solar design described in Cases P100A and P105A, while appropriate for Colorado Springs is inappropriate for Las Vegas.

Table 1-1. HERS BESTEST Case Descriptions—Tier 1 and Tier 2 Tests.

CASE #/ Test Tier	SUBFLOOR	INFILTR (ACH)	R-VALUE (h ft² F/Btu) WALLS, (Note 2) CEILING	FLOOR	WINDOW DATA TYPE	AREA (ft²) (Note 3)	ORIENT	SHADE	COMMENTS (Note 1)
L100A/ T1	VC	0.67	12,21	14	SATB	Gross: 270 Net: 197	AVG DIST	NO	Base building. Simple construction with typical glazings and insulation. Represents average of US building stock.
L110A/ T1	VC	1.5	12,21	14	SATB	Gross: 270 Net: 197	AVG DIST	NO	Tests infiltration.
L120A/ T1	VC	0.67	24,60	14	SATB	Gross: 270 Net: 197	AVG DIST	NO	Tests wall and ceiling R-value together.
L130A/ T1	VC	0.67	12,21	14	DLEW	Gross: 270 Net: 197	AVG DIST	NO	Tests glazing physical properties together.
L140A/ T1	VC	0.67	12,21	14	None	0	N/A	NO	Tests glazing area.
L150A/ T1	VC	0.67	12,21	14	SATB	Gross: 270 Net: 197	1.0 S	NO	Tests glazing orientation.
L155A/ T1	VC	0.67	12,21	14	SATB	Gross: 270 Net: 197	1.0 S	H	Tests South opaque overhang.
L160A/ T1	VC	0.67	12,21	14	SATB	Gross: 270 Net: 197	0.5E,0.5W	NO	Tests E/W glazing orientation.
L165A/ T2	VC	0.67	12,21	14	SATB	Gross: 270 Net: 197	0.5E,0.5W	HV	Tests E/W shading.
L170A/ T1	VC	0.67	12,21	14	SATB	Gross: 270 Net: 197	AVG DIST	NO	**Internal loads = 0.** Tests internal loads.
L200A/ T1	VC	1.5	5,12	4	SATB	Gross: 270 Net: 197	AVG DIST	NO	Lumped sensitivity low efficiency. Tests HERS ability to cover wide range of construction.
L202A/ T1	VC	1.5	5,12	4	SATB	Gross: 270 Net: 197	AVG DIST	NO	**Exterior Solar Absorptance = 0.2.** Tests low exterior solar absorptance.
L302A/ T1	SLAB	0.67	12,21	UNINS	SATB	Gross: 270 Net: 197	AVG DIST	NO	Tests ground coupling with uninsulated slab using ASHRAE perimeter method.
L304A/ T1	SLAB	0.67	12,21	EDGE INS	SATB	Gross: 270 Net: 197	AVG DIST	NO	Tests perimeter insulated slab using ASHRAE perimeter method.
L322A/ T1	BASE-MENT	0.67	12,21 (Note 4)	UNINS	SATB	Gross: 270 Net: 197	AVG DIST	NO	Tests ground coupling with uninsulated full basement using ASHRAE method.
L324A/ T1	BASE-MENT	0.67	12,21 (Note 4)	UNINS	SATB	Gross: 270 Net: 197	AVG DIST	NO	Tests ground coupling with insulated full basement using ASHRAE method.
P100A/ T2	VC	0.67	24,60	23	DW	Gross: 325 Net: 237	1.0 S	NO	**High mass passive solar construction.** Base building for P-series cases.
P105A/ T2	VC	0.67	24,60	23	DW	Gross: 325 Net: 237	1.0 S	H	Tests South opaque overhang.
P110A/ T2	VC	0.67	24,60	23	DW	Gross: 325 Net: 237	1.0 S	NO	**Low mass version of passive base case.** Tests mass effect.
P140A/ T2	VC	0.67	24,60	23	None	0	N/A	NO	Tests glazing area.
P150A/ T2	VC	0.67	24,60	23	DW	Gross: 325 Net: 237	AVG DIST	NO	Tests glazing orientation.

ABBREVIATIONS
SUBFLOOR = construction below main floor, VC = ventilated crawl space, SLAB = slab on grade, BASEMENT = full basement.
INFILTR (ACH) = Infiltration (Air Changes per Hour)
R-VALUE, FLOOR: UNINS = slab or basement coupled to ground, EDGE INS = 4 ft. deep perimeter slab insulation.
WINDOW DATA: SATB = single pane, clear glass, aluminum frame with thermal break; DLEW = double pane, low-e glass, wood frame, insulated spacer; DW = double pane, clear glass, wood frame, metal spacer.
ORIENT = Orientation; AVG DIST = window area distributed over walls in proportion to total exterior wall area.
N/A = not applicable; 1.0 S = all windows on south wall; 0.5E, 0.5W = 50% of window area on east wall and 50% of window area on west wall.
SHADE = window shading device; H = horizontal shade (overhang); HV = horizontal and vertical shading (overhang and fins).
ASHRAE = American Society of Heating, Refrigerating, and Air-Conditioning Engineers, Atlanta, GA.

NOTES
Note1: Changes to Case L100A are highlighted with bold font.
Note 2: These are composite R-values including all materials, films, and the presence of the attic for ceiling R-value; see Section 2 for more detail.
Note 3: Gross area is the total window area including the frame; net area is the area of just the glass portion of the window.
Note 4: Basement below-grade wall R-values including the ground are: L322A = R-8, L324A = R-19.

hercase1.wk3 c: 10/23/95

Table 1-2. HERS BESTEST Tier 1 Output Requirements

CASE	Annual (or seasonal) sensible heating load (MBtu/y) for listed climate	Annual (or seasonal) sensible cooling load (MBtu/y) for listed climate
L100A	CS	LV
L110A	CS	LV
L120A	CS	LV
L130A	CS	LV
L140A	CS	LV
L150A	CS	LV
L155A	CS	LV
L160A	CS	LV
L170A	CS	LV
L200A	CS	LV
L202A	CS	LV
L302A	CS	N/A
L304A	CS	N/A
L322A	CS	N/A
L324A	CS	N/A

CS = simulate the case for Colorado Springs, Colorado
LV = simulate the case for Las Vegas, Nevada
N/A = not applicable, do not generate that output

Table 1-3. HERS BESTEST Tier 2 Output Requirements

CASE	Annual (or seasonal) sensible heating load (MBtu/y) for listed climate	Annual (or seasonal) sensible cooling load (MBtu/y) for listed climate
L165A	CS	LV
P100A	CS	CS
P105A	CS	CS
P110A	CS	CS
P140A	CS	CS
P150A	CS	CS

CS = simulate the case for Colorado Springs, Colorado
LV = simulate the case for Las Vegas, Nevada

For software that designates heating and cooling seasons, monthly reference results and instructions for use of these results are provided in Volume 2, Section 3. Heating and cooling seasons may be for the entire year or some other reasonable length as defined by your tool.

1.1.4 Comparing Your Output to the Reference Results

In order to compare your output to the HERS BESTEST reference results, the following annual and monthly load outputs from simulations have been provided (see Volume 2, Section 3): heating loads for Colorado Springs, Colorado; cooling loads for Las Vegas, Nevada, except for the passive solar (P-series) cases where cooling loads are for Colorado Springs, Colorado.

The following programs were used to generate reference results:

- BLAST 3.0 Level 215
- DOE2.1E-W54
- SERIRES/SUNCODE 5.7

BLAST 3.0 is the program used by the U.S. Department of Defense for energy efficiency improvements to their buildings. (*BLAST User Reference*) DOE2.1E is considered to be the most advanced of the programs sponsored by the U.S. Department of Energy, and is the technical basis for setting national building energy codes and standards in the United States. (*DOE2 Reference Manual, DOE2 Supplement*) SUNCODE 5.7 is based on the public domain program SERIRES-1.0 developed by NREL. (Palmiter et al.)

1.2 Advice to Certifying Agency

1.2.1 Example pass/fail criteria

A program may be thought of as having passed successfully through the test series when its results compare favorably with passing ranges based on the reference program outputs on a case-by-case and a sensitivity basis (difference or delta (Δ) between certain cases).

Example pass/fail criteria based on the reference results are included and discussed in Section 4 (Volume 2) to illustrate how a certifying agency may evaluate a HERS tool with HERS BESTEST. The procedure for developing example passing ranges (excluding any application to specific reference results) is provided in Appendix H (Volume 1). The certifying agency using HERS BESTEST may adopt these example pass/fail criteria or develop their own pass/fail criteria. Neither DOE, the National Renewable Energy Laboratory (NREL), nor the authors of this report can be held responsible for any misfortunes caused by the use of the HERS BESTEST example pass/fail criteria in your certification program.

This page intentionally blank

2.0 Specific Input Information

This section contains building input data and weather data necessary for running all the cases. Refer to Tables 1-2 (Tier 1) and 1-3 (Tier 2) for a description of which cases are required for each of the two climate locations. Weather data is described in Section 2.1 below.

No two programs require exactly the same input information. Therefore, we have tried to describe the test cases in a fashion that allows many different HERS tools, representing different degrees of modeling complexity, to be tested.

Building input data (beginning in Section 2.2) are organized case by case. The base building description (Case L100A) occupies Section 2.2 with other cases organized as modifications to the base case (other Tier 1 cases in Section 2.3, and Tier 2 cases in Section 2.4). In some instances (e.g., Case L200A), a case developed from modifications to Case L100A will also serve as the base case for other cases. Within this structure, figures and tables are grouped as summary data and supplemental data. The summary data are figures and tables that contain information that should cover most of the input requirements for most users.

The supplemental tables contain more detailed information that was required for generating a consistent set of inputs to the reference programs. Such data include: material properties for modeling thermal mass and modeling the attic as a separate zone, interior solar distribution fractions, combined convective and radiative surface coefficients, hourly internal gains schedules, and detailed window optical properties. We expect that most HERS BESTEST users will only need a small amount of the supplemental data for their input decks, although we do not know exactly which part of it they may need. Again, **the modeling rules of Section 1.1 apply in all instances.**

Abbreviations used in the tables, figures, and text are defined in the acronyms and abbreviations list on page ix of this document.

2.1 Weather Data

Use the weather diskette supplied in your packet; see Appendix A for details about Typical Meteorological Year (TMY) Weather File format.

Weather data for two locations are supplied for the test:

- Colorado Springs, Colorado (a clear, cold climate)
- Las Vegas, Nevada (a hot, dry climate).

The weather data supplied on the enclosed diskette are TMY files that contain hourly weather data. These files have been compressed so that two weather files will fit on one diskette. Please use the file decompression instructions included under README.TXT on the diskette; file decompression software is included on the diskette. If your program uses some other representation of weather such as degree days, bin method, etc., then you will have to process the TMY weather data with your program's weather processor so that your weather data will be based on the diskette data. The weather properties for Colorado Springs, Colorado, and Las Vegas, Nevada, are summarized in Tables 2-1 and 2-2 below.

Table 2-1. Colorado Springs, Colorado, Climate Summary (Note 1)

Weather Type	Cold Clear Winters
Weather Format	Typical Meteorological Year (TMY)
Latitude	38.8° North
Longitude	104.7° West
Altitude	6145 ft
Time Zone	7
Ground Reflectivity	0.2
Site	flat, unobstructed, located exactly at weather station
Mean Annual Wind Speed	10.7 mph
Mean Annual Ambient Dry-Bulb Temperature (also for ground)	49.43°F
Mean Annual Daily Temperature Range	25.5°F
Minimum Annual Dry-Bulb Temperature	-9.9°F
Maximum Annual Dry-Bulb Temperature	93.9°F
Maximum Annual Wind Speed	36.9 mph
Heating Degree Days (Base 65°F)	6031.0°F-days (Note 2)
Cooling Degree Days (Base 65°F)	489.5°F-days (Note 2)
Mean Annual Dew Point Temperature	27.9°F
Mean Annual Humidity Ratio	0.0047
Global Horizontal Solar Radiation Annual Total	584.33 kBtu/ft^2-y
Direct Normal Solar Radiation Annual Total	759.67 kBtu/ft^2-y
Direct Horizontal Solar Radiation	430.27 kBtu/ft^2-y
Diffuse Horizontal Solar Radiation	154.07 kBtu/ft^2-y

Note 1: Unless otherwise noted, values are SERIRES/SUNCODE weather outputs.
Note 2: From DOE2.1E weather processor summary.

Table 2-2. Las Vegas, Nevada, Climate Summary (Note 1)

Weather Type	Hot Dry Summers
Weather Format	Typical Meteorological Year (TMY)
Latitude	36.1° North
Longitude	115.2° West
Altitude	2178 ft
Time Zone	8
Ground Reflectivity	0.2
Site	flat, unobstructed, located exactly at weather station
Mean Annual Wind Speed	9.6 mph
Mean Annual Ambient Dry-Bulb Temperature (also for ground)	66.69°F
Mean Annual Daily Temperature Range	23.6°F
Minimum Annual Dry-Bulb Temperature	23.0°F
Maximum Annual Dry-Bulb Temperature	113.0°F
Maximum Annual Wind Speed	35.8 mph
Heating Degree Days (Base 65°F)	2415.0°F-days (Note 2)
Cooling Degree Days (Base 65°F)	3025.0°F-days (Note 2)
Mean Annual Dew Point Temperature	28.1°F
Mean Annual Humidity Ratio	0.0040
Global Horizontal Solar Radiation Annual Total	687.38 kBtu/ft^2-y
Direct Normal Solar Radiation Annual Total	872.62 kBtu/ft^2-y
Direct Horizontal Solar Radiation	528.86 kBtu/ft^2-y
Diffuse Horizontal Solar Radiation	158.52 kBtu/ft^2-y

Note 1: Unless otherwise noted, values are SERIRES/SUNCODE weather outputs.
Note 2: From DOE2.1E weather processor summary.

2.2 The Base Case Building (Case L100A)

The bulk of the work for implementing HERS BESTEST is assembling an accurate base building. We recommend that you double check your base building inputs before going on to the other cases. As described in the following subsections, the base building is a 1539 ft² single-story house with one conditioned zone (the main floor), an unconditioned attic, and a vented crawl space. The following figures and tables included after the base building discussion contain information that is applicable to most users.

- Figure 2-1. Base Building Axonometric
- Figure 2-2. Floor Plan - Case L100A
- Figure 2-3. East Side Elevation - Case L100A
- Figure 2-4. Exterior Wall Plan Section - Case L100A
- Figure 2-5. Floor Above Vented Crawl Space Section - Case L100A
- Figure 2-6. Ceiling/Attic/Roof Section - Case L100A
- Figure 2-7. Interior Wall Plan Section - Case L100A
- Figure 2-8. Window Detail, Vertical Slider (NFRC AA) with 2-3/4" Wide Frame - Case L100A
- Table 2-3. Building Thermal Summary - Case L100A
- Table 2-4. Other Building Details - Case L100A.

Relevant supplementary tables that include more detailed information are:

- Table 2-5. Component Surface Areas and Solar Fractions - Case L100A
- Table 2-6. Material Descriptions, Exterior Wall, Door, and Window - Case L100A
- Table 2-7. Material Descriptions, Floor Over Vented Crawl Space - Case L100A
- Table 2-8. Material Descriptions, Ceiling, Attic, and Roof - Case L100A
- Table 2-9. Material Descriptions, Ceiling/Attic/Roof, Attic as Material Layer - Case L100A (for calculating equivalent ceiling/attic/roof composite R-value.)
- Table 2-10. Material Descriptions, Interior Wall - Case L100A
- Table 2-11. Internal Loads Schedule - Case L100A
- Table 2-12. Gross Window Summary, Single Pane Aluminum Frame with Thermal Break - Case L100A
- Table 2-13. Glazing Summary, Single Pane Center of Glass Values - Case L100A
- Table 2-14. Optical Properties as a Function of Incidence Angle for Single-Pane Glazing - Case L100A.

Other details not described in these figures and tables are discussed topically in the following subsections.

2.2.1 Attic

Many of the HERS tools that we surveyed input an attic by specifying it within a menu of roof types, and then specifying the insulation-only R-value corresponding to the insulation installed on the attic floor. If this is the case for your software, then the information provided in **Figure 2-6** will be sufficient.

For programs such as those used for developing the reference results, more detailed information is required. **The detailed information for modeling an attic as a separate zone is supplied in Table 2-8.** Table 2-9 gives similar information as Table 2-8 except in Table 2-9 the attic space is modelled as a layer of thermal resistance between ceiling and roof materials. Table 2-9 is included to document the calculation of ceiling/attic/roof composite air-air R-value noted in the building thermal summary of Table 2-3. In Table 2-9 the equivalent resistance for the attic is based on values from the *Cooling and Heating Load Calculation Manual* (McQuiston and Spitler, p. 4.12); typical ventilation by natural effects

and roof solar absorptance of 0.6 were assumed. The equivalence of the one-zone model versus the two-zone base case was verified with sensitivity tests using BLAST and SERIRES/SUNCODE. However, model the attic as a separate zone if your software allows it.

2.2.2 Vented Crawl Space

No attempt was made to describe the vented crawl space as a separate zone. To simulate a vented crawl space, HERS BESTEST only requires the floor to have an exterior film coefficient for "rough" surface texture and zero windspeed (in addition to the floor materials and interior film coefficient). Consistent with *ASHRAE Handbook 1993 Fundamentals*, **vented crawl space air temperature is assumed to equal outdoor air temperature.**

2.2.3 Windows

A great deal of information about the window properties has been provided so that equivalent input for windows will be possible for many programs. **The basic properties of the single-pane window, including shading coefficient, solar heat gain coefficient, and thermal resistance, are provided in Table 2-3. Additional information can be found in Figure 2-8, Table 2-6, and Tables 2-12 through 2-14.** This information is drawn primarily from the WINDOW 4.1 (WINDOW 4.1, 1994) software for developing detailed glazing properties. For programs that need transmittance or reflectance at other angles of incidence, interpolate between the values of Table 2-14. Where other unspecified data are needed, then values consistent with those quoted will have to be calculated.

For the base case, total glass and frame areas for each wall can be combined into a single large area for that wall. For later cases where shading is used, the specific window geometry will need to be modeled as closely as possible.

2.2.4 Interior Walls

The interior walls within the conditioned zone have been included for the purpose of modeling the effect of their mass. They are not intended to divide the conditioned zone into separately controlled zones. The importance of modeling interior wall mass will be more evident in Tier 2 tests when passive solar cases are added to HERS BESTEST.

2.2.5 Infiltration

Colorado Springs, Colorado, and Las Vegas, Nevada, are at 6145 ft. and 2178 ft. altitude respectively, so the density of air is less than that at sea-level for both locations. If your program does not use barometric pressure from the weather data, or otherwise automatically corrects for the change in air density caused by altitude, then adjust the specified infiltration rates (to yield mass flows equivalent to what would occur at the specified altitude) as shown in **Table 2-4**. Only use the attic infiltration rate if your software allows that input. Attic infiltration is based on the *Cooling and Heating Load Calculation Manual*, (McQuiston and Spitler, P. 4.12) for typical ventilation by natural effects. If you need more information about altitude effects on infiltration, see Appendix B.

2.2.6 Internal Loads

These are non-HVAC related internally generated loads from equipment, lights, people, animals, etc. **An hourly internal load schedule for the conditioned zone is specified in Table 2-11.** There are no internal loads in the attic. This schedule disaggregates sensible and latent loads. If your software does not analyze latent loads, then leave them out and use only the sensible portion of the internal loads. **Aggregate sensible loads are 70% radiative and 30% convective.**

Because internal loads are given only for their effect on heating and cooling load, the equipment fuel type and efficiency associated with generating these loads do not matter.

2.2.7 Combined Radiative and Convective Surface Coefficients

Combined surface coefficients are denoted in various section drawings throughout Volume 1 as "Interior Film" and "Exterior Film" (e.g., see Figures 2-4 through 2-7). If your program uses combined surface coefficients, then use the information given in **Table 2-4** (this information is also included with the detailed material descriptions of Tables 2-6 through 2-10). Because the heating season average windspeed for Colorado Springs, Colorado, is nearly equal to the cooling season average windspeed for Las Vegas, Nevada, the listed exterior surface coefficients apply to both climates.

If your program does not allow variation of combined surface coefficients or if your program automatically calculates interior and exterior surface convection and radiation in greater detail, then you may ignore this information. See Appendices C and D if you need more information on surface coefficients.

2.2.8 Surface Radiative Properties

Surface radiative properties are given in **Table 2-4. These properties apply to all opaque exterior and interior building surfaces;** they are roughly equivalent to medium color paint or a light color roof.

2.2.9 Interior Solar Distribution

Interior solar distribution is the fraction of transmitted solar radiation incident on specific surfaces in a room. This effect can be significant in passive solar applications. If your program does not calculate this effect internally, then use the interior solar fractions from **Table 2-5**. The calculation of transmitted solar radiation reflected back out through windows (cavity albedo) is presented in Appendix E. If your program does not allow for variations of interior solar distribution, then disregard.

2.2.10 Mechanical System

For the base building, obtain only pure load outputs (i.e., assume all equipment including ducts is 100% efficient). The thermostat settings and equipment descriptions below are sufficient for this purpose. This mechanical system only applies to the conditioned zone; it does not apply to the unconditioned attic. Assume the following:

- 100% Convective Air System
- The thermostat senses only the air temperature
- The thermostat is of the nonproportional type.

2.2.10.1 Thermostat Control Strategies

Annual thermostat control settings are shown below. Because monthly reference results for an entire year are provided in Volume 2, Section 3, your heating and cooling seasons may be for the entire year or some other reasonable length as designated by your tool. Instructions for using monthly reference results are also provided in Volume 2, Section 3.

For Colorado Springs, Colorado (heating only) cases:

HEAT = ON IF TEMP < 68°F; COOL = OFF.

For Las Vegas, Nevada (cooling only) cases:

COOL = ON IF TEMP > 78°F; HEAT = OFF.

The thermostat is nonproportional in the sense that when the air temperature exceeds the thermostat cooling set-point, the heat extraction rate is assumed to equal the maximum capacity of the cooling equipment. Likewise, when the air temperature drops below the thermostat heating set-point, the heat addition rate equals the maximum capacity of the heating equipment. A proportional thermostat model can be made to approximate a nonproportional thermostat model by setting a very small throttling range (the minimum allowed by your program).

2.2.10.2 Equipment Characteristics

HEATING CAPACITY = 3413 MBtu/h (effectively infinite).
EFFECTIVE EFFICIENCY = 100%.

COOLING CAPACITY = 3413 MBtu/h (effectively infinite).
EFFECTIVE EFFICIENCY = 100%.

WASTE HEAT FROM FAN = 0.

The 3413 MBtu/h requirement comes from the english equivalent of 1 MW. If your software does not allow this much capacity, then use the largest system that your software will allow.

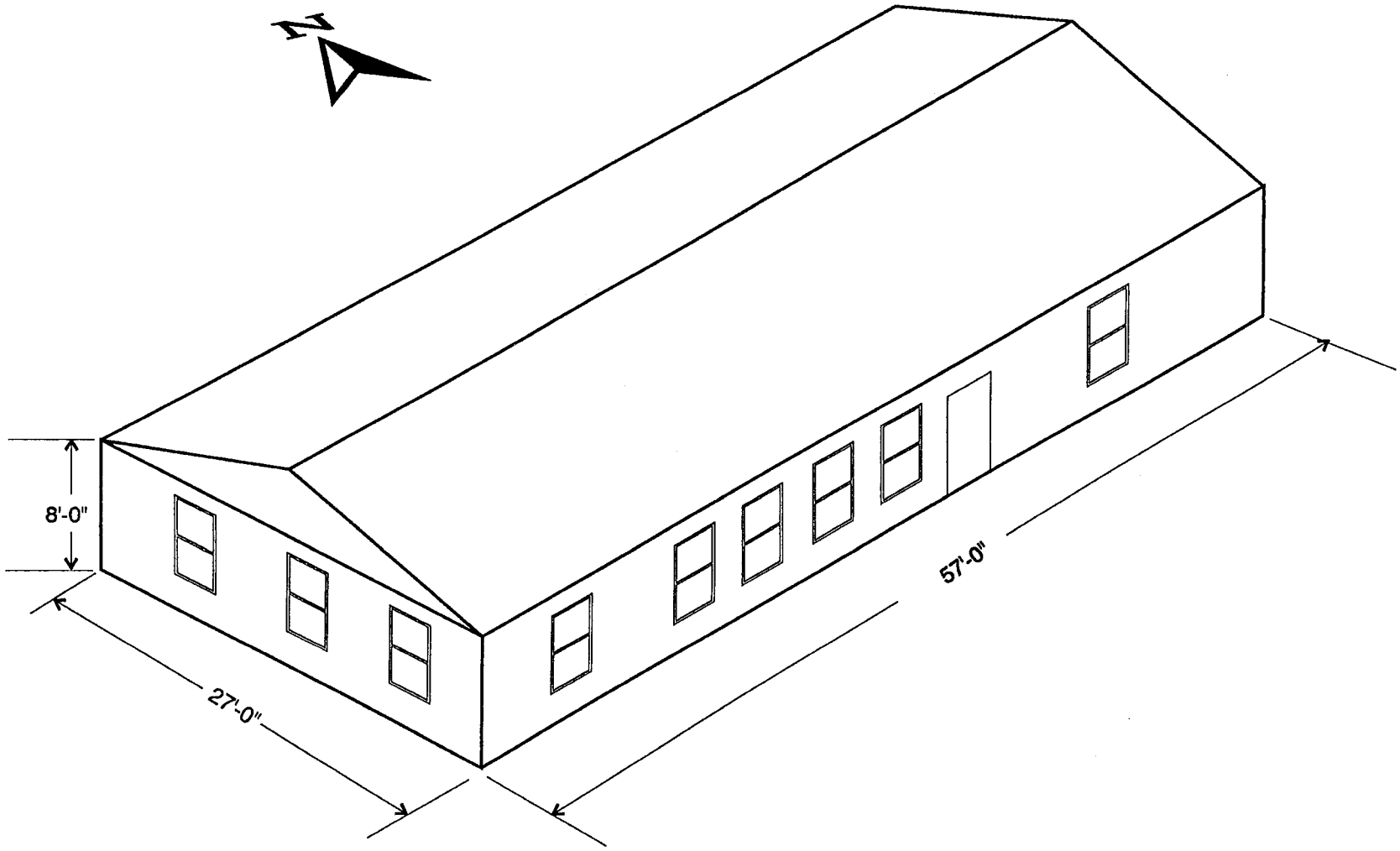

CD-RH06-A0327318

Figure 2-1. Base building axonometric

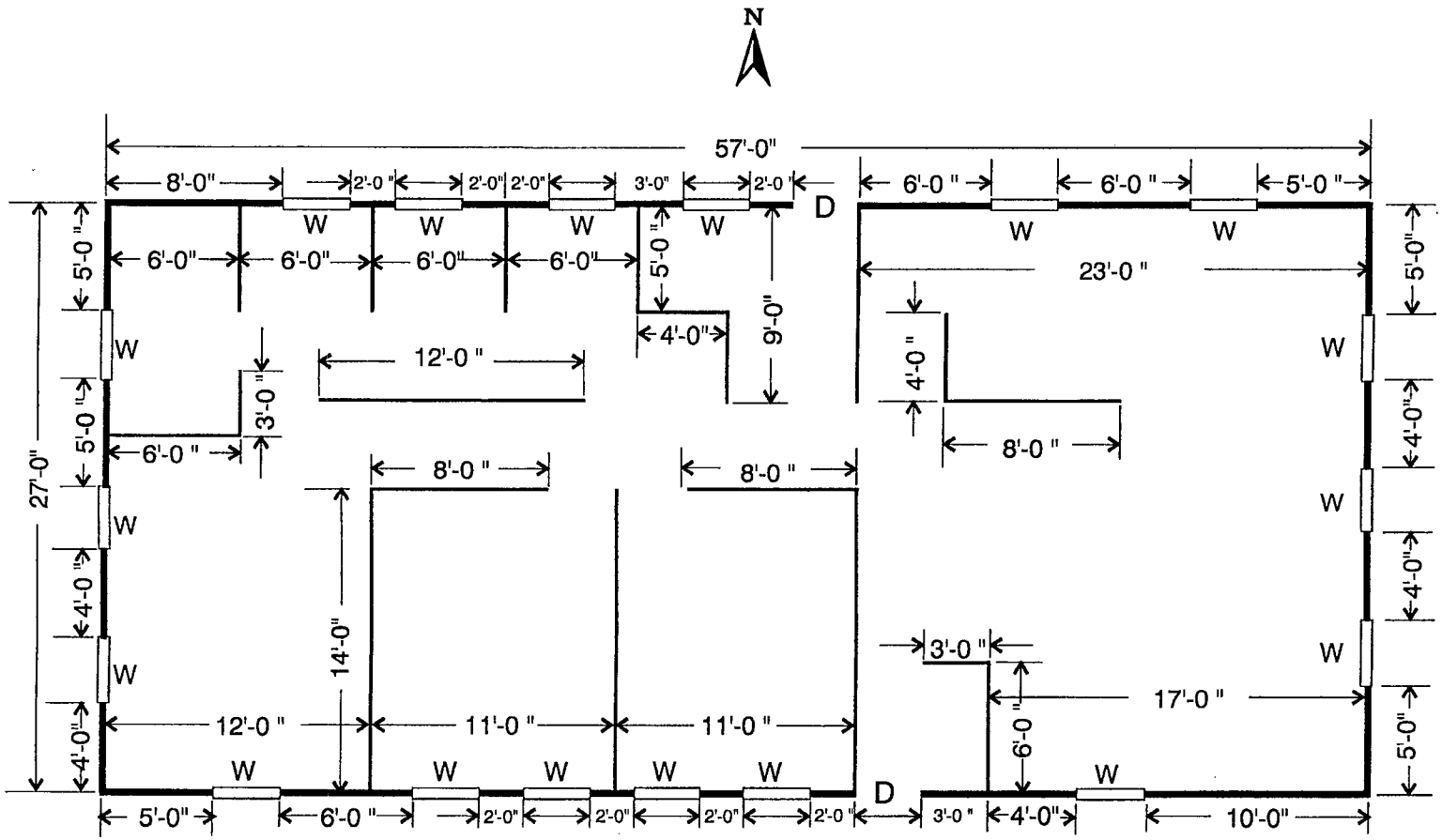

Legend:

W = Window (3′ wide x 5′ high), see Figure 2-8

D = Solid-core wood door (3′ wide x 6′8″ high)

CD-RH06-A0327301

Figure 2-2. Floor plan—Case L100A

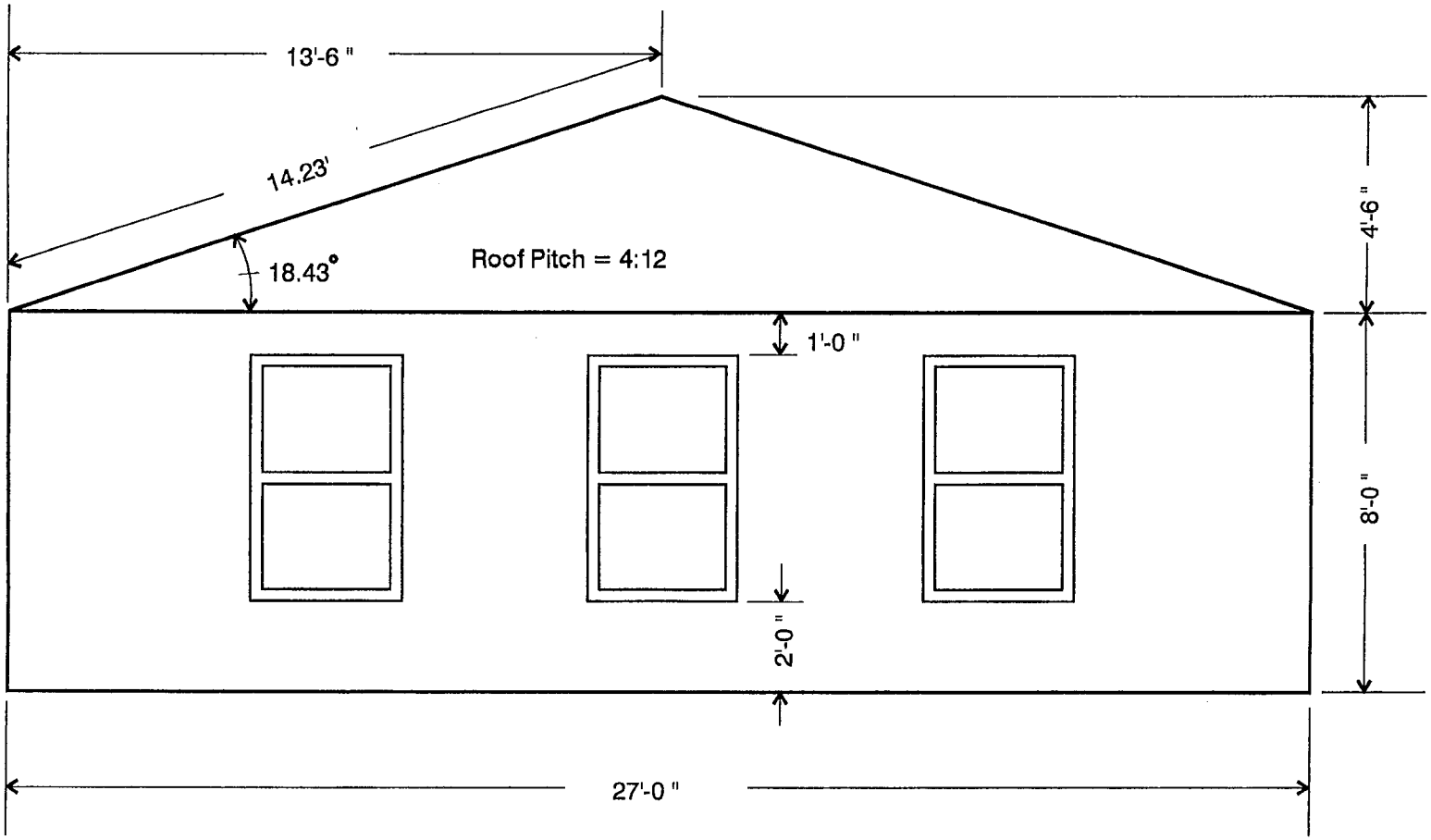

Note: All windows located vertically as shown here.

CD-RH06-A0327302

Figure 2-3. East side elevation—Case L100A

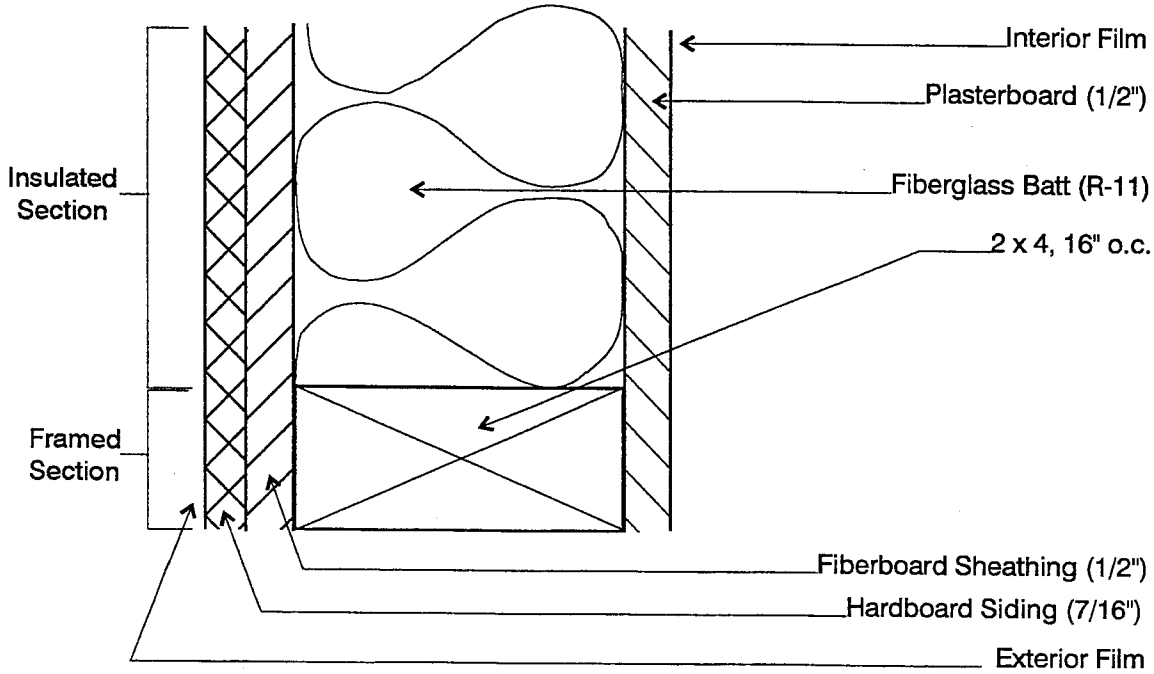

Figure 2-4. Exterior wall plan section—Case L100A

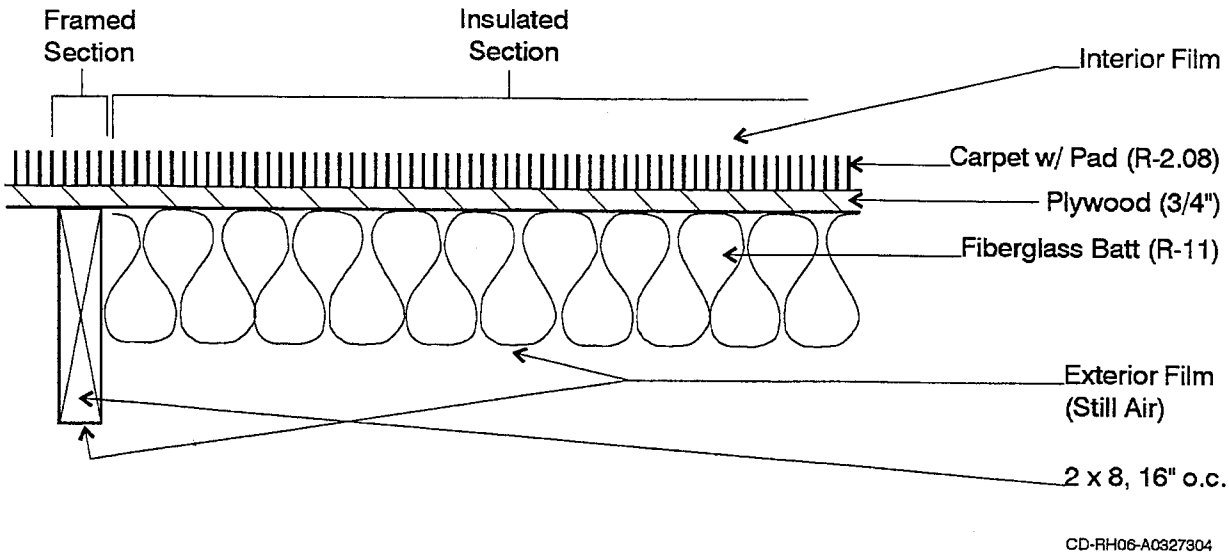

Figure 2-5. Floor above vented crawl space, section—Case L100A

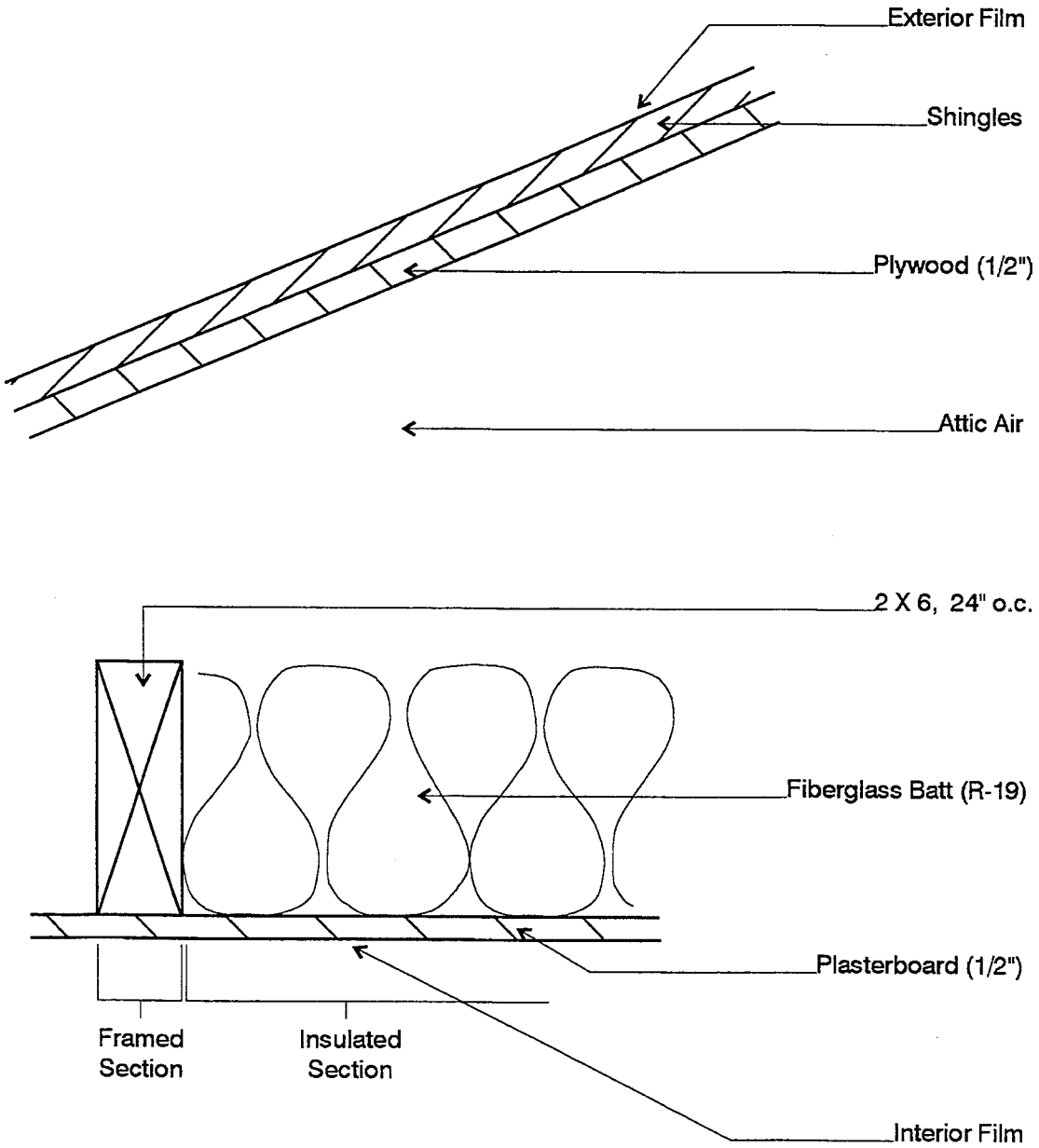

CD-RH06-A0327305

Figure 2-6. Ceiling/attic/roof section—Case L100A

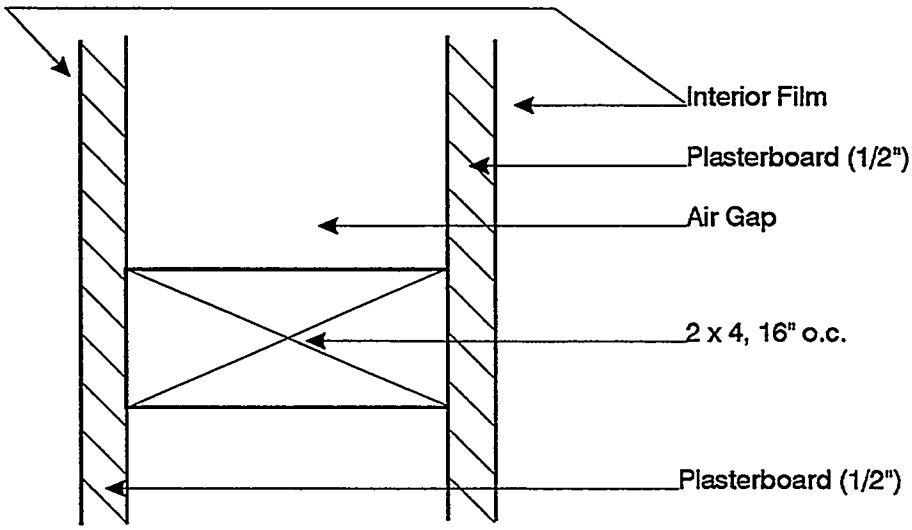

CD-RH06-A0327323

Figure 2-7. Interior wall plan section—Case L100A

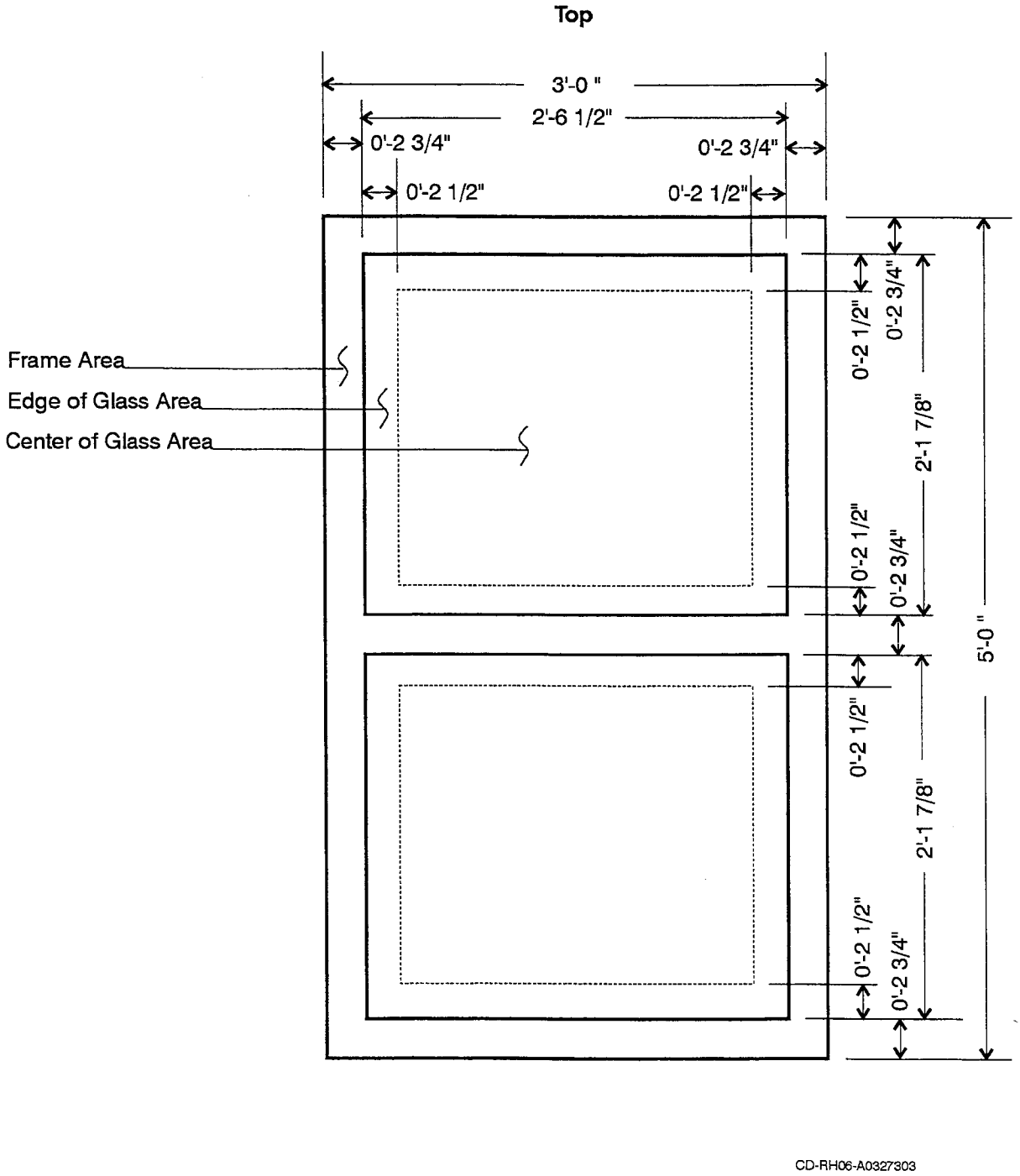

Figure 2-8. Window detail, vertical slider (NFRC AA) with 2¾″-wide frame—Case L100A

Table 2-3. Building Thermal Summary—Case L100A

ELEMENT	AREA ft^2	R $h*ft^2*F/Btu$ (Note 1)	U $Btu/(h*ft^2*F)$ (Note 1)	UA Btu/(h*F) (Note 1)	HEATCAP Btu/F (Note 2)
Exterior Walls (Note 3)	1034	11.76	0.085	87.9	1383
North Windows (Note 4)	90	0.96	1.039	93.5	
East Windows (Note 4)	45	0.96	1.039	46.7	
West Windows (Note 4)	45	0.96	1.039	46.7	
South Windows (Note 4)	90	0.96	1.039	93.5	
Doors	40	3.04	0.329	13.2	62
Ceiling/Attic/Roof (Note 5)	1539	20.48	0.049	75.1	1665
Floor (Note 5)	1539	14.15	0.071	108.8	1471
Infiltration (Note 6)					
Colorado Springs, CO				118.2	
Las Vegas, NV				136.9	
Interior Walls	1024				1425
TOTAL BUILDING					6006
Excluding Infiltration				565.5	
Including Infiltration (Colorado Springs, CO)				683.7	
Including Infiltration (Las Vegas, NV)				702.4	

WINDOW SUMMARY: SINGLE PANE, ALUMINUM FRAME WITH THERMAL BREAK

(Note 7)	Area ft^2	U $Btu/(h*ft^2*F)$ (Note 1)	SHGC (dir. nor.) (Note 8)	Trans. (dir. nor.) (Note 9)	SC (Note 10)
Glass pane	10.96	1.064	0.857	0.837	1.000
Aluminum sash with thermal break	4.04	0.971			
Window composite air-air	15.00	1.039	0.670	0.612	0.781

Note 1: Includes interior and exterior surface coefficients.

Note 2: Heat capacity includes building mass within the thermal envelope (e.g., insulation and insulation thickness of structural framing are included, exterior siding and roof/attic mass are excluded).

Note 3: Excludes area of windows and doors. ASHRAE framed area fraction of 0.25 is assumed for 2x4 16" O.C. construction.

Note 4: Window area and other properties are for glass and frame combined. The accompanying window summary disaggregates glass and frame properties for a single window unit. North and south walls contain six window units each; east and west walls contain three window units each.

Note 5: ASHRAE roof/ceiling framing area fraction of 0.1 applied to both ceiling and floor.

Note 6: Infiltration UA = (infiltration mass flow)*(specific heat). Assumes air properties: specific heat = 0.240 Btu/(lb*F); density = 0.075 lb/ft^3 at sea level, adjusted for altitude per Appendix B. The following values were used to obtain infiltration UA:

Location	ACH	Volume (ft^3)	Altitude (ft)	UAinf (Btu/(h*F))
Colo Sprgs	0.67	12312	6145	118.2
Las Vegas	0.67	12312	2178	136.9

Note 7: This data summarizes one complete window unit per detailed description of Figure 2-8 and Tables 2-12 through 2-14.

Note 8: SHGC is the Solar Heat Gain Coefficient that includes the inward flowing fraction of absorbed direct normal solar radiation in addition to direct normal transmittance. For more detail, see ASHRAE 1993 Fundamentals, chp. 27.

Note 9: "Trans." is the direct normal transmittance.

Note 10: Shading coefficient (SC) is the ratio of direct normal SHGC for a specific glazing unit to direct normal SHGC for the WINDOW 4.1 reference glazing unit.

hspec4.wk3, r:a1..g48 20-Jul-95

Table 2-4. Other Building Details—Case L100A

	Conditioned Zone		Attic (unconditioned)	
AIR VOLUME (ft^3)	12312		3463	
INFILTRATION	ACH	CFM	ACH	CFM
HERS w/ automatic altitude adjustment	0.67	137.5	2.4	138.5
HERS w/ site fixed at sea level (Note 1)				
Colorado Springs, CO	0.533	109.4	1.910	110.2
Las Vegas, NV	0.618	126.8	2.213	127.7
INTERNAL GAINS	Sensible	Latent	Sensible	Latent
Daily internal gains (Btu/day) (see Table 2-11 for hourly profile)	56105	12156	0	0

COMBINED RADIATIVE AND CONVECTIVE SURFACE (FILM) COEFFICIENTS (Note 2)	Exterior film U-val Btu/(h*ft²*F)	Interior film U-val Btu/(h*ft²*F)
Walls and doors	5.748	1.460
Ceiling	n/a	1.307
Roof	5.748	1.330
Floor above ventilated crawl space	2.200	1.307
Window	4.256	1.460
Window frame	4.256	1.460
SURFACE RADIATIVE PROPERTIES	Exterior	Interior
Shortwave (visible and UV) absorptance	0.6	0.6
Longwave (infrared) emittance	0.9	0.9

Note 1: Appendix B describes the algorithm used for adjusting infiltration rates if your software does not account for variation of air density with altitude (i.e., site fixed at sea level).

Note 2: More information about combined surface coefficients is included in Appendices C and D.

hspec4.wk3, s:a1..e28 20-Jul-95

2.2.11 Case L100A: Supplementary Tables

The following data were used for generating reference results. The previous figures and tables summarized, and are based on, the data presented in this section. We expect that many HERS tools will not be able to directly input much of the data in this section (e.g., material densities, specific heats, detailed window optical properties, interior solar fractions, surface coefficients, etc.). However, if your models are capable of receiving this level of detail, then you must use these tables where possible.

Table 2-5. Component Surface Areas and Solar Fractions—Case L100A

ELEMENT	HEIGHT or LENGTH ft	WIDTH ft	MULTIPLIER	AREA ft²	INSIDE SOLAR FRACTION	
EXT. NORTH/SOUTH WALLS					(Note 1)	
Gross Wall	8.0	57.0	1.0	456.0		
Gross Window	5.0	3.0	6.0	90.0		
Window Frame Only				24.2	0.0031	
Door	6.7	3.0	1.0	20.0	0.0026	
Net Wall (Note 2)				346.0		
Insulated Wall (Note 2)				259.5	0.0332	
Framed Wall (Note 2)				86.5	0.0111	
EXTERIOR EAST/WEST WALLS						
Gross Wall	8.0	27.0	1.0	216.0		
Gross Window	5.0	3.0	3.0	45.0		
Window Frame Only				12.1	0.0016	
Net Wall (Note 2)				171.0		
Insulated Wall (Note 2)				128.3	0.0164	
Framed Wall (Note 2)				42.8	0.0055	
INTERIOR WALLS						
Gross Wall (Note 3)	8.0	128.0		1024.0		
Unframed Wall (Note 3)				921.6	0.1179	
Framed Wall (Note 3)				102.4	0.0131	
FLOOR/CEILING						
Gross Floor/Ceiling	57.0	27.0	1.0	1539.0		
Insulated Floor/Ceiling (Note 4)				1385.1	0.1772	
Framed Floor/Ceiling (Note 4)				153.9	0.0197	
ROOF						
Roof Deck (Note 5)	57.0	14.2	2.0	1622.2		
Attic E/W Gable (Note 6)	4.5	27.0	2.0	121.5		
TRANSMITTED SOLAR, INTERIOR DISTRIBUTION SUMMARY						
Total Opaque Interior Surface Area (Note 7)				6272.7	0.8024	
Solar to Air (or low mass furnishings)					0.1750	(Note 8)
Solar Lost (back out through windows)					0.0226	(Note 9)

Note 1: Solar energy transmitted through windows is assumed as distributed to interior opaque surfaces in proportion to their areas. Only the radiation not directly absorbed by lightweight furnishings (assumed to exist only for the purpose of calculating inside solar fraction) or lost back out through windows is distributed to interior opaque surfaces.

Note 2: Net wall area is gross wall area less the rough opening areas of the windows and door. Insulated and framed exterior wall sections are defined in Figure 2-4. ASHRAE framed area fraction of 0.25 is assumed for 2x4 16" O.C. construction.

Note 3: Width is the total length of all interior walls. Framed wall area is assumed to be 10% of gross wall area for 2x4 16" O.C. framing. Only one side of the wall is considered for listed area. This area is multiplied by 2 for determining solar fractions. Solar fractions shown are for just one side of the interior wall.

Note 4: Insulated and framed floor and ceiling sections are defined in Figures 2-5 and 2-6 respectively. ASHRAE roof/ceiling framing area fraction of 0.1 applied to both ceiling and floor.

Note 5: The multiplier accounts for both the northward and southward sloped portions of the roof deck.

Note 6: Gable area is calculated as a triangle. Multiplier accounts for east- and west-facing gable ends.

Note 7: Total area of just those surfaces to which an inside solar fraction is applied.

Note 8: Based on the midpoint of the range given by SUNCODE-PC User's Manual, p. 2-16.

Note 9: Calculated using the algorithm described in Appendix E.

hspec4.wk3, c:a1..g51 20-Jul-95

Table 2-6. Material Descriptions Exterior Wall, Door, and Window—Case L100A

EXTERIOR WALL (inside to outside) ELEMENT	Thickness in	R h*ft²*F/ Btu	U Btu/ h*ft²*F	k Btu/ h*ft*F	DENSITY lb/ft³	Cp Btu/lb*F
Int Surf Coef		0.685	1.460			
Plasterboard	0.5	0.450	2.222	0.0926	50.0	0.26
Fiberglass batt (Note 1)	3.5	11.000	0.091	0.0265	0.6	0.20
Frame 2x4, 16" O.C. (Note 2)	3.5	4.373	0.229	0.0667	32.0	0.33
Fiberboard sheathing	0.5	1.320	0.758	0.0316	18.0	0.31
Hardboard siding, 7/16"	0.44	0.670	1.492	0.0544	40.0	0.28
Ext Surf Coef (Note 3)		0.174	5.748			
Total air - air, insulated section		14.299	0.070			
Total air - air, frame section		7.672	0.130			
Total air - air, composite section (Note 4)		11.760	0.085			
Total surf - surf, insulated section		13.440	0.074			
Total surf - surf, frame section		6.813	0.147			
Total surf - surf, composite section (Note 5)		10.901	0.092			
DOOR						
Solid core door	1.75	2.179	0.459	0.0669	32.0	0.33
Total air - air, door only (Note 6)		3.038	0.329			

WINDOW SUMMARY: SINGLE PANE, ALUMINUM FRAME WITH THERMAL BREAK (Note 7) ELEMENT (Source)	Thickness in	Area ft2	R h*ft²*F/ Btu	U Btu/ h*ft²*F	SHGC (dir. nor.) (Note 8)	Trans. (dir. nor.) (Note 9)	SC (Note 10)
Int surf coef, glass			0.685	1.460			
Int surf coef, frame			0.685	1.460			
Glass pane	0.118	10.96	0.020	49.371	0.857	0.837	1.000
Aluminum sash w/ thermal break		4.04	0.110	9.096			
Ext surf coef (Note 11)			0.235	4.256			
Window composite air-air		15.00	0.963	1.039	0.670	0.612	0.781

Note 1: Insulated section only, see Figure 2-4 for section view of wall.

Note 2: Framed section only, see Figure 2-4 for section view of wall.

Note 3: 10.7 mph wind speed and brick/rough plaster roughness assumed; see Appendices C and D for more information about exterior film coefficients.

Note 4: Total composite R-values based on 75% insulated section 25% frame area section per ASHRAE. Thermal properties of windows and doors are not included in this composite calculation.

Note 5: Total surf-surf composite R-value is the total air-air composite R-value less the resistances due to the film coefficients.

Note 6: Door has same film coefficients as exterior wall.

Note 7: This section summarizes the detailed window description of Tables 2-12 through 2-14. Areas pertain to one complete window unit only (see Figure 2-8). If your software is capable of modeling windows in greater detail than shown here, then use Tables 2-12 through 2-14.

Note 8: SHGC is the Solar Heat Gain Coefficient, which includes the inward flowing fraction of absorbed direct normal solar radiation in addition to direct normal transmittance. For more detail, see ASHRAE 1993 Fundamentals, chp. 27.

Note 9: "Trans." is the direct normal transmittance.

Note 10: Shading coefficient (SC) is the ratio of direct normal SHGC for a specific glazing unit to direct normal SHGC for the WINDOW 4.1 reference glazing unit.

Note 11: Exterior surface coefficient is the same for both frame and glass; see Appendices C and D for more about exterior film coefficients.

hspec4.wk3 a:h1..o52 20-Jul-95

Table 2-7. Material Descriptions, Floor Over Vented Crawl Space—Case L100A

FLOOR OVER VENTED CRAWL SPACE (inside to outside)						
ELEMENT	Thickness in	R $h*ft^2*F/Btu$	U Btu/ $h*ft^2*F$	k Btu/ h*ft*F	DENSITY lb/ft^3	Cp Btu/lb*F
Int Surf Coef (Note 1)		0.765	1.307			
Carpet w/ fibrous pad (Note 2)		2.080	0.481			0.34
Plywood 3/4"	0.75	0.937	1.067	0.0667	34.0	0.29
Fiberglass batt (Note 3)	3.5	11.000	0.091	0.0265	0.6	0.20
Joists 2x8, 16" O.C. (Note 4)	3.5	4.373	0.229	0.0667	32.0	0.33
Ext Surf Coef (Note 5)		0.455	2.200			
Total air-air, insulated section		15.237	0.066			
Total air-air, frame section		8.609	0.116			
Total air-air, composite section (Note 6)		14.148	0.071			
Total surf-surf, composite section (Note 7)		12.928	0.077			

Note 1: Average of ASHRAE heating and cooling coefficients.

Note 2: There is not enough information available for modeling thermal mass of carpet.

Note 3: Insulated section only, see Figure 2-5 for section view of floor.

Note 4: Framed section only, see Figure 2-5 for section view of floor. For modeling purposes, thickness is the same as for insulation, remaining length is assumed to be at crawl space temperature and is not considered as thermal mass.

Note 5: Still air and brick/rough plaster roughness assumed; see Appendix C for exterior film coefficient as a function of windspeed and surface roughness. This coefficient is applied to the 1539 ft^2 floor area.

Note 6: ASHRAE roof/ceiling framing area fraction of 0.1 applied.

Note 7: Total air-air composite R-value less the film resistances.

hspec4.wk3 a:h70..n97 20-Jul-95

Table 2-8. Material Descriptions, Ceiling, Attic, and Roof—Case L100A

CASE L100: CEILING/ATTIC/ROOF (inside to outside), attic as unconditioned zone (Note 1) ELEMENT	Thickness in	R h*ft²*F/ Btu	U Btu/ h*ft²*F	k Btu/ h*ft*F	DENSITY lb/ft³	Cp Btu/lb*F
CEILING (1539 ft² total area)						
Int Surf Coef (Note 2)		0.765	1.307			
Plasterboard	0.5	0.450	2.222	0.0926	50.0	0.26
Fiberglass batt (Note 3)	6.25	19.000	0.053	0.0274	0.6	0.20
Joists 2x6, 24" OC (Note 4)	5.5	6.872	0.146	0.0667	32.0	0.33
Int Surf Coef (Note 2)		0.765	1.307			
Total air-air, insulated section		20.980	0.048			
Total air-air, framed section		8.852	0.113			
Total air-air, composite section (Note 5)		18.452	0.054			
Total surf - surf, composite section (Note 5)		16.922	0.059			
END GABLES (121.5 ft² total area)						
Int Surf Coef		0.685	1.460			
Plywood 1/2"	0.5	0.625	1.601	0.0667	34.0	0.29
Hardboard siding, 7/16"	0.44	0.670	1.492	0.0544	40.0	0.28
Ext Surf Coef (Note 6)		0.174	5.748			
Total air-air		2.154	0.464			
ROOF (1622 ft² total area)						
Int Surf Coef (Note 7)		0.752	1.330			
Plywood 1/2"	0.5	0.625	1.601	0.0667	34.0	0.29
Asphalt shingle 1/4"	0.25	0.440	2.273	0.0473	70.0	0.30
Ext Surf Coef (Note 6)		0.174	5.748			
Total air-air		1.991	0.502			
Total Roof/Gable UA, surf-surf (Note 8)		1711	Btu/(h F)			

Note 1: This table is for modeling the attic as a separate zone.
Note 2: Average of ASHRAE heating and cooling coefficients, horizontal surface.
Note 3: Insulated section only, see Figure 2-6 for section view of ceiling.
Note 4: Framed section only, see Figure 2-6 for section view of ceiling.
Note 5: Based on 10% frame area fraction per ASHRAE; applies to temperature difference between room air and attic air. The "Composite surf-surf" R-value is the composite air-air R-value less the two interior film coefficient R-values.
Note 6: 10.7 mph wind speed and brick/rough plaster roughness assumed; see Appendix C for more about exterior film coefficients.
Note 7: Average for ASHRAE upward and downward heat flow through sloped surface, interpolated on cosine of roof pitch angle.
Note 8: Area weighted sum of plywood and asphalt shingle or wood siding material layers, does not include film coefficients. This value used for developing Table 2-9.

hspec4.wk3 d:a1..g45 09-Aug-95

Table 2-9. Material Descriptions, Ceiling/Attic/Roof, Attic as Material Layer—Case L100A

COMPOSITE CEILING/ATTIC/ROOF (inside to outside)						
ELEMENT	Thickness in	R h*ft²*F/ Btu	U Btu/ h*ft²*F	k Btu/ h*ft*F	DENSITY lb/ft³	Cp Btu/lb*F
CEILING/ATTIC AIR (1539 ft² total area)						
Int Surf Coef		0.765	1.307			
Plasterboard	0.5	0.450	2.222	0.0926	50.0	0.26
Fiberglass batt (Note 1)	6.25	19.000	0.053	0.0274	0.6	0.20
Joists 2x6, 24" OC (Note 2)	5.5	6.872	0.146	0.0667	32.0	0.33
Attic air space (Note 3)		1.550	0.645			
ROOF DECK AND GABLE PROPERTIES SCALED TO CEILING AREA, 1539 ft² (Note 4)						
Plywood 1/2"	0.5	0.515	1.940	0.0808	41.2	0.29
Hybrid shingle/siding (Note 5)	0.25	0.384	2.605	0.0543	84.8	0.30
Total roof deck/gable, surf-surf (Note 6)		0.899	1.112			
Ext Surf Coef		0.144	6.967			
SUMMARY CEILING/ATTIC/ROOF						
Total air-air, insulated section		22.808	0.044			
Total air-air, framed section		10.679	0.094			
Total composite, air-air (Note 7)		20.482	0.049			
Total composite, surf-surf (Note 8)		19.573	0.051			

Note 1: Insulated section only, see Figure 2-6 for section view of ceiling/attic/roof.
Note 2: Framed section only, see Figure 2-6 for section view of ceiling/attic/roof.
Note 3: Average winter/summer values for natural ventilation (2.4 ACH), R-19 ceiling insulation, ext abs = 0.6, includes interior films.
Note 4: Scaled properties are presented for use with ASHRAE equivalent attic air space R-value. U, R and k are scaled on area, while density and specific heat are scaled on volume (area and thickness).
Note 5: This "material" combines roofing and end gable materials into one hybrid layer of material.
Note 6: Based on total roof/gable UA, surf-surf calculated in Table 2-8.
Note 7: (ceiling interior film coefficient) + (ceiling materials) + (attic as material layer) + (scaled roof deck/gable materials) + (scaled exterior film coefficient). Based on 90% insulated section and 10% frame section per ASHRAE.
Note 8: Based on total air-air R-value less R-values of interior film coefficient and scaled exterior film coefficient.

hspec4.wk3 d:a59..g97 21-Jul-95

Table 2-10. Material Descriptions, Interior Wall—Case L100A

INTERIOR WALL ELEMENT (Source)	Thickness in	R h*ft²*F/ Btu	U Btu/ h*ft²*F	k Btu/ h*ft*F	DENSITY lb/ft³	Cp Btu/lb*F
Int Surf Coef		0.685	1.460			
Plasterboard	0.5	0.450	2.222	0.0926	50.0	0.26
Frame 2x4, 16" O.C. (Note 1)	3.5	4.373	0.229	0.0667	32.0	0.33
Plasterboard	0.5	0.450	2.222	0.0926	50.0	0.26
Int Surf Coef		0.685	1.460			

Note 1: Frame 2x4 only applies to 10% of the interior wall area. Remaining area is air space that is disregarded.

hspec4.wk3 g:a1..g14 20-Jul-95

Table 2-11. Internal Loads Schedule—Case L100A

Hour of Day (Note 1)	Sensible Load (Btu) (Note 2)	Latent Load (Btu) (Note 2)	Hour of Day	Sensible Load (Btu)	Latent Load (Btu)
1	1139	247	13	1707	370
2	1139	247	14	1424	308
3	1139	247	15	1480	321
4	1139	247	16	1480	321
5	1139	247	17	2164	469
6	1903	412	18	2334	506
7	2391	518	19	2505	543
8	4782	1036	20	3928	851
9	2790	604	21	3928	851
10	1707	370	22	4101	888
11	1707	370	23	4101	888
12	2277	493	24	3701	802
			Totals	56105	12156

Note 1: Hour 1 = the interval from midnight to 1am.

Note 2: Includes all possible sources of internal gains; sensible loads are 70% radiative and 30% convective.

hspec4.wk3 f:a1..h21 20-Jul-95

Table 2-12. Gross Window Summary, Single Pane Aluminum Frame with Thermal Break—Case L100A

Property	Value Units	Notes
GENERAL PROPERTIES		
Area, gross window	15.00 ft^2	(Note 1)
Width, frame	2.75 in	
Area, frame	4.04 ft^2	
Area, edge of glass (EOG)	3.57 ft^2	
Area, center of glass (COG)	7.39 ft^2	
Area, net glass	10.96 ft^2	(Area,EOG + Area,COG)
OPTICAL PROPERTIES		
Absorptance, frame	0.60	
Transmittance, frame	0.00	
COG/EOG optical properties	(see Table 2-13)	(Note 2)
Solar Heat Gain Coefficient (SHGC), gross window	0.670	(Note 3)
Shading Coefficient (SC), gross window	0.781	(Note 3)
Dividers, curtains, blinds, and other obstructions in window	None	
THERMAL PROPERTIES (conductances/resistances include film coefficients)		
Conductance, frame	0.971 Btu/(h ft^2 F)	Aluminum frame with thermal
(R-Value)	1.030 h ft^2 F/Btu	break (Note 4)
Conductance, edge of glass	1.064 Btu/(h ft^2 F)	
(R-Value)	0.940 h ft^2 F/Btu	
Conductance, center of glass	1.064 Btu/(h ft^2 F)	
(R-Value)	0.940 h ft^2 F/Btu	
Conductance, net glass	1.064 Btu/(h ft^2 F)	(Note 5)
(R-Value)	0.940 h ft^2 F/Btu	
Conductance, gross window	1.039 Btu/(h ft^2 F)	(Note 6)
(R-Value)	0.963 h ft^2 F/Btu	
COMBINED SURFACE COEFFICIENT CONDUCTANCES		
Exterior Surf Coef, glass and frame	4.256 Btu/(h ft^2 F)	based on output of WINDOW 4.1
Interior Surface Coefficient, glass	1.460 Btu/(h ft^2 F)	based on output of WINDOW 4.1
Interior Surface Coefficient, frame	1.460 Btu/(h ft^2 F)	from ASHRAE

Note 1: Area for one representative window unit. See Fig. 2-8 for a schematic representation of frame, center-of-glass (COG) and edge-of-glass (EOG) areas; dimensions are based on an NFRC size AA vertical slider. Gross window area is the sum of frame, COG and EOG areas.

Note 2: Edge-of-glass optical properties are the same as the center-of-glass properties. Table 2-14 gives optical properties as a function of incidence angle.

Note 3: These are the overall window (including COG, EOG, and frame) properties for direct normal solar radiation.

Note 4: The frame conductance presented here is based on the ASHRAE value for operable 1-pane window with aluminum frame with thermal break adjusted for the exterior surface coefficients also shown in this table. Material properties for dynamic modeling of window frames (density, specific heat, etc.) are not given.

Note 5: Net glass conductance includes only the COG and EOG portions of the window.

Note 6: Gross window conductance includes the frame, EOG, and COG portions of the window.

hspec4.wk3, b:a46..h94 20-Jul-95

Table 2-13. Glazing Summary, Single Pane Center of Glass Values—Case L100A

Property	Value Units
GENERAL PROPERTIES	
Number of Panes	1
Pane Thickness	0.118 in
SINGLE PANE OPTICAL PROP.	(Note 1)
Transmittance	0.837
Reflectance	0.075
Absorptance	0.088
Index of Refraction	1.5223
Extinction Coefficient	0.7806 /in
Solar Heat Gain Coefficient (SHGC)	0.857
Shading Coefficient (SC)	1.000
Optical Properties as a Function of Incident Angle	(See Table 2-14)
THERMAL PROPERTIES	
Conductivity of Glass	0.520 Btu/(h ft F)
Conductance of Glass Pane	52.881 Btu/(h ft^2 F)
(R-Value)	0.019 h ft^2 F/Btu
Exterior Combined Surface Coefficient	4.256 Btu/(h ft^2 F)
(R-Value)	0.235 h ft^2 F/Btu
Interior Combined Surface Coef	1.460 Btu/(h ft^2 F)
(R-Value)	0.685 h ft^2 F/Btu
U-Value from Interior Air to Ambient Air	1.064 Btu/(h ft^2 F)
(R-Value)	0.940 h ft^2 F/Btu
Hemispherical Infra-red Emittance	0.84
Infra-red Transmittance	0
Density of Glass	154 lb/ft^3
Specific Heat of Glass	0.18 Btu/(lb F)

Note 1: Optical properties listed in this table are for direct normal radiation.

hspec4.wk3, b:a1..f35; 20-Jul-95

Table 2-14. Optical Properties as a Function of Incidence Angle for Single-Pane Glazing—Case L100A

	Properties (Notes 1, 2)			
Angle	Trans	Refl	Abs	SHGC
0	0.837	0.075	0.088	0.857
10	0.836	0.075	0.089	0.857
20	0.835	0.075	0.090	0.856
30	0.830	0.077	0.093	0.852
40	0.821	0.083	0.097	0.843
50	0.800	0.099	0.101	0.823
60	0.752	0.143	0.105	0.776
70	0.639	0.253	0.108	0.664
80	0.390	0.505	0.105	0.414
90	0.000	1.000	0.000	0.000
Hemis	0.756	0.136	0.098	0.779

Note1: Trans = Transmittance. Refl = Reflectance. Abs = Absorptance. SHGC = Solar Heat Gain Coefficient. Hemis = Hemispherically integrated property.

Note 2: Output is from WINDOW 4.1 for the following properties at direct normal incidence: transmittance = 0.837, reflectance = 0.075. SHGC accounts for surface coefficients, and is based on windspeed = 10.7 mph.

hspecl3.wk3, b:a111..g134; Aug 03, 1995

2.3 The Tier 1 Test Cases

This section describes revisions to the base building required to model the other Tier 1 cases of HERS BESTEST case by case. In some instances the base building for a case is not Case L100A; cases with non-L100A basis are:

Case	Basis for that case
L155A	L150A
L202A	L200A
L304A	L302A
L324A	L322A

For convenience, relevant portions of the appropriate base building tables and figures have been reprinted with changes highlighted in bold font. Where applicable, summary figures and tables are listed first with supplementary tables listed afterward.

2.3.1 Case L110A: High Infiltration (1.5 ACH)

Case L110A is **exactly as Case L100A except** that infiltration for the conditioned zone is changed as shown in Table 2-15. Discussion of infiltration rate adjustment for altitude can be found in Appendix B. Attic infiltration rate remains unchanged.

Table 2-15. Conditioned Zone Infiltration for Case L110A

Infiltration Algorithm	ACH	CFM
HERS w/ automatic altitude adjustment	1.5	307.8
HERS w/ site fixed at sea level		
Colorado Springs, CO	1.194	244.9
Las Vegas, NV	1.383	283.9

2.3.2 Case L120A: Well Insulated Walls and Roof

Case L120A is **exactly as Case L100A except** that an extra layer of R-38 batt insulation has been added to the ceiling, and exterior walls have 2x6 24" O.C. framing and R-18 batt insulation with R-7.2 polyisocyanurate exterior board insulation. The following figures and table highlight information that is expected to be useful to most users.

- Figure 2-9. Exterior Wall Plan Section - Case L120A
- Figure 2-10. Ceiling Section - Case L120A
- Table 2-16. Building Thermal Summary - Case L120A.

Relevant supplementary tables that include more detailed information are:

- Table 2-17. Component Surface Areas and Solar Fractions - Case L120A
- Table 2-18. Material Descriptions, Exterior Wall - Case L120A
- Table 2-19. Material Descriptions, Ceiling - Case L120A
- Table 2-20. Material Descriptions for Attic as Material Layer - Case L120A (for calculation of equivalent ceiling/attic/roof composite R-value, see discussion of the base building attic in Section 2.2).

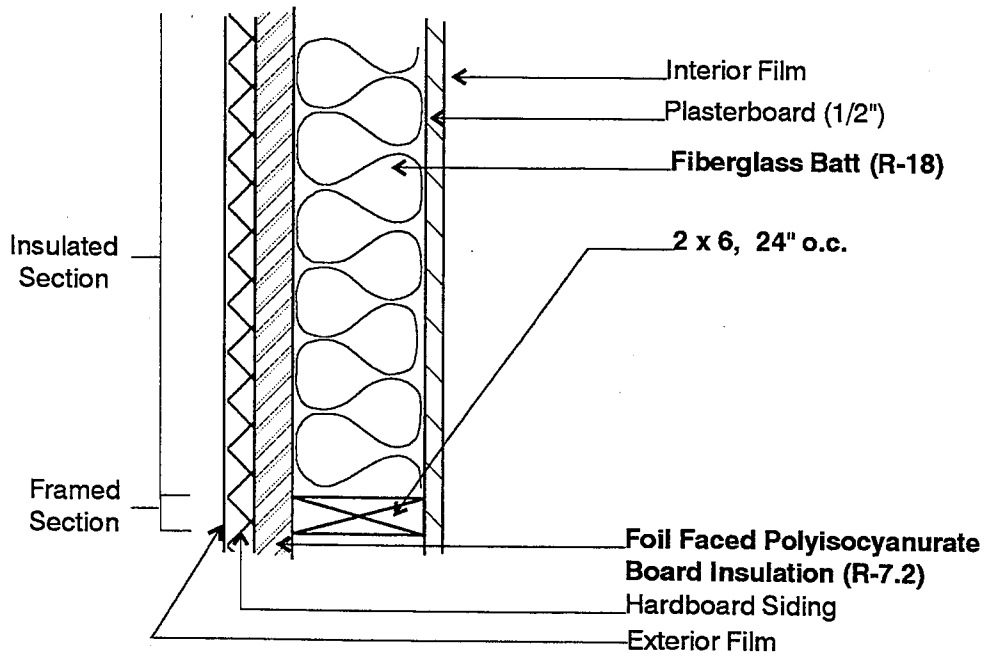

Note: Changes to Case L100A are highlighted with bold font.

Figure 2-9. Exterior wall plan section—Case L120A

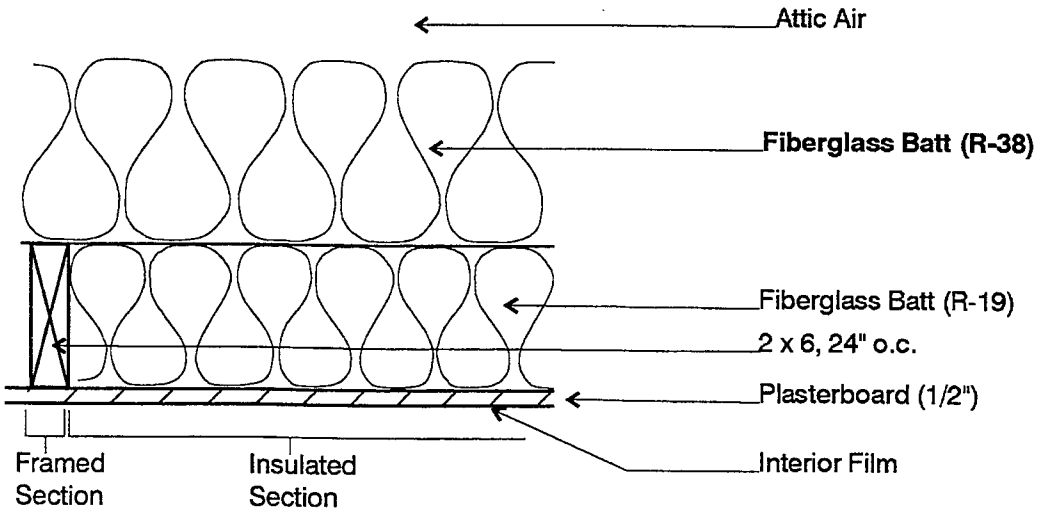

Note: Changes to Case L100A are highlighted with bold font.

CD-RH06-A0327320

Figure 2-10. Ceiling section—Case L120A

Table 2-16. Building Thermal Summary—Case L120A

ELEMENT (Note 1)	AREA ft2	R h*ft^2*F/Btu (Note 2)	U Btu/(h*ft^2*F) (Note 2)	UA Btu/(h*F) (Note 2)	HEATCAP Btu/F (Note 3)
Exterior Walls (Note 4)	1034	**23.58**	**0.042**	**43.8**	**1749**
North Windows	90	0.96	1.039	93.5	
East Windows	45	0.96	1.039	46.7	
West Windows	45	0.96	1.039	46.7	
South Windows	90	0.96	1.039	93.5	
Doors	40	3.04	0.329	13.2	62
Ceiling/Attic/Roof (Note 5)	1539	**59.53**	**0.017**	**25.9**	**1850**
Floor (Note 5)	1539	14.15	0.071	108.8	**1471**
Infiltration					
Colorado Springs, CO				118.2	
Las Vegas, NV				136.9	
Interior Walls	1024				1425
TOTAL BUILDING					**6556**
Excluding Infiltration				**472.1**	
Including Infiltration (Colorado Springs, CO)				**590.3**	
Including Infiltration (Las Vegas, NV)				**609.1**	

Note 1: Changes to Case L100A are highlighted by bold font.

Note 2: Includes interior and exterior surface coefficients.

Note 3: Heat capacity includes building mass within the thermal envelope (e.g., insulation and insulation thickness of structural framing are included, exterior siding and roof/attic mass are excluded).

Note 4: Excludes window and door area. ASHRAE framed area fraction of 0.22 used for 2x6 24" O.C. construction.

Note 5: ASHRAE roof/ceiling framing area fraction of 0.1 used for both ceiling and floor.

hspec4.wk3, r:a60..g87 20-Jul-95

2.3.2.1 Case L120A: Supplementary Tables

The following data were used for generating reference results. The previous figures and tables summarized, and are based on, the data presented in this section. We expect that many HERS tools will not be able to directly input much of the data in this section (e.g., material densities, specific heats, interior solar fractions, surface coefficients, etc.). However, if your models are capable of receiving this level of detail, then you must use these tables where possible.

Table 2-17. Component Surface Areas and Solar Fractions—Case L120A

ELEMENT (Note 1)	AREA ft^2	INSIDE SOLAR FRACTION
EXTERIOR NORTH/SOUTH WALLS		(Note 2)
Net Wall (Note 3)	346.0	
Insulated Wall (Note 4)	**269.9**	**0.0345**
Framed Wall (Note 4)	**76.1**	**0.0097**
EXTERIOR EAST/WEST WALLS		
Net Wall (Note 3)	171.0	
Insulated Wall (Note 4)	**133.4**	**0.0171**
Framed Wall (Note 4)	**37.6**	**0.0048**

Note 1: Changes to Case L100A are highlighted by bold font. All other surface areas remain as in Case L100A.

Note 2: Solar energy transmitted through windows is assumed as distributed to interior opaque surfaces in proportion to their areas. Only the radiation not directly absorbed by lightweight furnishings (assumed to exist only for the purpose of calculating inside solar fraction) or lost back out through windows is distributed to interior opaque surfaces.

Note 3: Net wall area is the gross wall area less the rough opening areas of the windows and door.

Note 4: Insulated and framed exterior wall sections are defined in Figure 2-9. ASHRAE framed area fraction of 0.22 is assumed for 2x6 24" O.C. construction.

hspec4.wk3, h:a40..f64 20-Jul-95

Table 2-18. Material Descriptions, Exterior Wall—Case L120A

EXTERIOR WALL (inside to outside) (Note 1) ELEMENT (Source)	Thickness in	R h*ft²*F/ Btu	U Btu/ h*ft²*F	k Btu/ h*ft*F	DENSITY lb/ft³	Cp Btu/lb*F
Int Surf Coef		0.685	1.460			
Plasterboard	0.5	0.450	2.222	0.0926	50.0	0.26
Fiberglass batt (Note 2)	**5.5**	**18.000**	**0.056**	**0.0255**	**0.68**	0.20
Frame 2x6 24" OC (Note 3)	**5.5**	**6.872**	**0.146**	0.0667	32.0	0.33
Isocyanurate board ins	**1.0**	**7.200**	**0.139**	**0.0116**	**2.0**	**0.22**
Hardboard siding, 7/16"	0.44	0.670	1.492	0.0544	40.0	0.28
Ext Surf Coef		0.174	5.748			
Total air - air, insulated section		**27.179**	**0.037**			
Total air - air, frame section		**16.051**	**0.062**			
Total air - air, composite section (Note 4)		**23.582**	**0.042**			
Total surf - surf, insulated section		**26.320**	**0.038**			
Total surf - surf, frame section		**15.192**	**0.066**			
Total surf - surf, composite section (Note 5)		**22.723**	**0.044**			

Note 1: Changes to Case L100A are highlighted in bold font.

Note 2: Insulated section only, see Figure 2-9 for wall section view. Properties adjusted for compression of batt into cavity.

Note 3: Framed section only, see Figure 2-9 for section view of wall.

Note 4: Total composite R-values from 78% insulated section, 22% framed section per ASHRAE.

Thermal properties of windows and doors are not included in this composite calculation.

Note 5: Total surf-surf composite R-value is the total air-air composite R-value less the resistances due to the film coefficients.

hspec4.wk3 h:a1..g28 20-Jul-95

Table 2-19. Material Descriptions, Ceiling—Case L120A

CEILING (inside to outside) (Note 1) ELEMENT	Thickness in	R h*ft²*F/ Btu	U Btu/ h*ft²*F	k Btu/ h*ft*F	DENSITY lb/ft³	Cp Btu/lb*F
CEILING (1539 ft² total area)						
Int Surf Coef		0.765	1.307			
Plasterboard	0.5	0.450	2.222	0.0926	50.0	0.26
Fiberglass batt (Note 2)	6.25	19.000	0.053	0.0274	0.6	0.20
Joists 2x6 24" OC (Note 3)	5.5	6.872	0.146	0.0667	32.0	0.33
Fiberglass batt	**12.0**	**38.000**	**0.026**	**0.0263**	**0.6**	**0.20**
Int Surf Coef		0.765	1.307			
Total air-air, insulated section		**58.980**	**0.017**			
Total air-air, framed section		**46.852**	**0.021**			
Total air-air, composite section	(Note 4)	**57.492**	**0.017**			
Total surf-surf, composite sec.	(Note 4)	**55.962**	**0.018**			

Note 1: Changes to Case L100A are highlighted with bold font. Use this table if attic modeled as separate zone.

Note 2: Insulated section only, see Figure 2-10 for section view of ceiling.

Note 3: Framed section only, see Figure 2-10 for section view of ceiling.

Note 4: Based on 90% insulated section and 10% frame section per ASHRAE; applies to temperature difference between room air and attic air. The "Composite surf-surf" R-value is the composite air-air R-value less the two interior film coefficient R-values.

Table 2-20. Material Descriptions for Attic as Material Layer—Case L120A

COMPOSITE CEILING/ATTIC/ROOF (inside to outside) **(Note 1)** ELEMENT	Thickness in	R h*ft²*F/ Btu	U Btu/ h*ft²*F	k Btu/ h*ft*F	DENSITY lb/ft³	Cp Btu/lb*F
CEILING/ATTIC (1539 ft² total area)						
Int Surf Coef		0.765	1.307			
Plasterboard	0.5	0.450	2.222	0.0926	50.0	0.26
Fiberglass batt (Note 2)	6.25	19.000	0.053	0.0274	0.6	0.20
Joists 2x6 24" OC (Note 3)	5.5	6.872	0.146	0.0667	32.0	0.33
Fiberglass batt	**12.0**	**38.000**	**0.026**	**0.0263**	**0.6**	**0.20**
Attic air space (Note 4)		**1.750**	**0.571**			
Total roof deck/gable, surf-surf (Note 5)		0.899	1.112			
Ext Surf Coef (Note 6)		0.144	6.967			
SUMMARY CEILING/ATTIC/ROOF						
Total air-air, insulated section		**61.008**	**0.016**			
Total air-air, framed section		**48.879**	**0.020**			
Total air-air, composite section	(Note 7)	**59.531**	**0.017**			
Total surf-surf, composite sec.	(Note 8)	**58.622**	**0.017**			

Note 1: Changes to Case L100A are highlighted by bold font. Use this table if attic modeled as material layer.

Note 2: Insulated section only, see Figure 2-10 for section view of ceiling.

Note 3: Insulated section only, see Figure 2-10 for section view of ceiling.

Note 4: Average winter/summer values for natural vent (2.4 ACH), R-30 ceiling ins, ext abs = 0.6, includes interior films.

Note 5: From Table 2-9 (Case L100A).

Note 6: Scaled to 1539 ft².

Note 7: Based on 10% frame area fraction per ASHRAE; applies to temperature difference between room air and ambient air.

Note 8: Based on total air-air R-value less R-values of interior film coefficient and scaled exterior film coefficient.

hspec4.wk3 h:a70..g126 09-Aug-95

2.3.3 Case L130A: Double-Pane Low-Emissivity Window with Wood Frame

Case L130A is **exactly as Case L100A except** that all single-pane windows are replaced with double-pane low-emissivity (low-e) windows with wood frames and insulated spacers. The basic properties of the window, including shading coefficient, solar heat gain coefficient, and thermal resistance are provided in:

- Table 2-21. Building Thermal Summary - Case L130A.

Window and frame geometry remain as for Case L100A.

Relevant supplementary tables that include more detailed information are:

- Table 2-22. Advanced Window (Double-Pane, Low-E, Argon Fill, Wood Frame, Insulated Spacer) - Case L130A
- Table 2-23. Low-E Glazing System with Argon Gas Fill Glazing Summary (Center of Glass Values) - Case L130A
- Table 2-24. Optical Properties as a Function of Incidence Angle for Low-Emissivity Double-Pane Glazing - Case L130A
- Table 2-25. Component Solar Fractions - Case L130A.

Window properties are drawn from the WINDOW 4.1 (WINDOW 4.1, 1994) software for window thermal analysis. For programs that need transmittance or reflectance at other angles of incidence, interpolate between the values of Table 2-24. Where other unspecified data are needed, then values consistent with those quoted will have to be calculated.

There is a slight change in interior surface solar distribution caused by reduced solar lost (cavity albedo); for those tools that can vary this input, values are included in Table 2-25.

Because of the large number of changes to the glazing for this case, Tables 2-22 through 2-24 have **not** been highlighted with bold font to show where changes occurred.

Table 2-21. Building Thermal Summary—Case L130A

ELEMENT (Note 1)	AREA ft^2	R $h*ft^2*F/Btu$ (Note 2)	U $Btu/(h*ft^2*F)$ (Note 2)	UA Btu/(h*F) (Note 2)	HEATCAP Btu/F (Note 3)
Exterior Walls (Note 4)	1034	11.76	0.085	87.9	1383
North Windows (Note 5)	90	**3.33**	**0.300**	**27.0**	
East Windows (Note 5)	45	**3.33**	**0.300**	**13.5**	
West Windows (Note 5)	45	**3.33**	**0.300**	**13.5**	
South Windows (Note 5)	90	**3.33**	**0.300**	**27.0**	
Doors	40	3.04	0.329	13.2	62
Ceiling/Attic/Roof (Note 6)	1539	20.48	0.049	75.1	1665
Floor (Note 6)	1539	14.15	0.071	108.8	1471
Infiltration					
Colorado Springs, CO				118.2	
Las Vegas, NV				136.9	
Interior Walls	1024				1425
TOTAL BUILDING					6006
Excluding Infiltration				**366.1**	
Including Infiltration (Colorado Springs, CO)				**484.3**	
Including Infiltration (Las Vegas, NV)				**503.1**	

WINDOW SUMMARY: DOUBLE-PANE, LOW-E, WOOD FRAME, INSULATED SPACER

(Note 7)	Area ft^2	U $Btu/(h*ft^2*F)$ (Note 2)	SHGC (dir. nor.) (Note 8)	Trans. (dir. nor.) (Note 9)	SC (Note 10)
Dbl-pane, low-e, argon	10.96	**0.247**	**0.432**	**0.387**	**0.504**
Wood frame, insulated spacer	4.04	**0.446**			
Window composite air-air	15.00	**0.300**	**0.335**	**0.283**	**0.391**

Note 1: Changes to Case L100A are highlighted by bold font.

Note 2: Includes interior and exterior surface coefficients.

Note 3: Heat capacity includes building mass within the thermal envelope (e.g., insulation and insulation thickness of structural framing are included, exterior siding and roof/attic mass are excluded).

Note 4: Excludes area of windows and doors. ASHRAE framed area fraction of 0.25 is assumed for 2x4 16" O.C. construction.

Note 5: Window area and other properties are for glass and frame combined. The accompanying window summary disaggregates glass and frame properties for a single window unit. North and south walls contain six window units each; east and west walls contain three window units each.

Note 6: ASHRAE roof/ceiling framing area fraction of 0.1 applied to both ceiling and floor.

Note 7: This data summarizes one complete detailed window unit per Figure 2-8 and Tables 2-22 through 2-24.

Note 8: SHGC is the Solar Heat Gain Coefficient, which includes the inward flowing fraction of absorbed direct normal solar radiation in addition to direct normal transmittance. For more detail, see ASHRAE 1993 Fundamentals, chp. 27.

Note 9: "Trans." is the direct normal transmittance.

Note 10: Shading coefficient (SC) is the ratio of direct normal SHGC for a specific glazing unit to direct normal SHGC for the WINDOW 4.1 reference glazing unit.

hspec4.wk3, r:a100..g143 20-Jul-95

Table 2-22. Advanced Window (Double-Pane, Low-E, Argon Fill Wood Frame, Insulated Spacer)—Case L130A

Property	Value Units	Notes
GENERAL PROPERTIES		
Area, gross window	15.00 ft^2	(Note 1)
Width, frame	2.75 in	
Area, frame	4.04 ft^2	
Area, edge of glass (EOG)	3.57 ft^2	
Area, center of glass (COG)	7.39 ft^2	
Area, net glass	10.96 ft^2	(Area,EOG + Area,COG)
OPTICAL PROPERTIES		
Absorptance, frame	0.60	
Transmittance, frame	0.00	
COG/EOG optical properties	(see Table 2-23)	(Note 2)
Solar Heat Gain Coefficient (SHGC), gross window	0.335	(Note 3)
Shading Coefficient (SC), gross window	0.391	(Note 3)
Dividers, curtains, blinds, and other obstructions in window	None	
THERMAL PROPERTIES (conductances/resistances include film coefficients)		
Conductance, frame	0.446 Btu/(h ft^2 F)	Wood frame with insulated spacer
(R-Value)	2.242 h ft^2 F/Btu	(Note 4)
Conductance, edge of glass	0.265 Btu/(h ft^2 F)	
(R-Value)	3.774 h ft^2 F/Btu	
Conductance, center of glass	0.238 Btu/(h ft^2 F)	
(R-Value)	4.202 h ft^2 F/Btu	
Conductance, net glass	0.247 Btu/(h ft^2 F)	(Note 5)
(R-Value)	4.052 h ft^2 F/Btu	
Conductance, gross window	0.300 Btu/(h ft^2 F)	(Note 6)
(R-Value)	3.329 h ft^2 F/Btu	
COMBINED SURFACE COEFFICIENT CONDUCTANCES		
Exterior Surf Coef, glass and frame	4.256 Btu/(h ft^2 F)	based on output of WINDOW 4.1
Interior Surface Coefficient, glass	1.333 Btu/(h ft^2 F)	based on output of WINDOW 4.1
Interior Surface Coefficient, frame	1.460 Btu/(h ft^2 F)	from ASHRAE

Note 1: Area for one representative window unit. See Fig. 2-8 for a schematic representation of frame, center-of-glass (COG) and edge-of-glass (EOG) areas: dimensions are based on an NFRC size AA vertical slider. Gross window area is the sum of frame, COG, and EOG areas.

Note 2: Edge-of-glass optical properties are the same as the center-of-glass optical properties. Table 2-24 gives optical properties as a function of incidence angle.

Note 3: These are overall window (including COG, EOG, and frame) properties for direct normal solar radiation.

Note 4: The frame conductance presented here is based on the ASHRAE value for operable two-pane window with wood/vinyl frame and insulated spacer adjusted for the exterior surface coefficients also shown in this table. Material properties for dynamic modeling of window frames (density, specific heat, etc.) are not given.

Note 5: Net glass conductance includes only the COG and EOG portions of the window.

Note 6: Gross window conductance includes the frame, EOG, and COG portions of the window.

hspec4.wk3, l:a59..h107; 20-Jul-95

Table 2-23. Low-E Glazing System with Argon Gas Fill Glazing Summary (Center of Glass Values)—Case L130A

Property	Value Units
GENERAL PROPERTIES	
Number of Panes	2
Pane Thickness	0.118 in
Argon Gap Thickness	0.500 in
OUTER PANE OPTICAL PROP.	(Note 1, Note 2)
Transmittance	0.450
Reflectance	0.340
Absorptance	0.210
Index of Refraction	(Note 3)
Extinction Coefficient	(Note 3)
INNER PANE OPTICAL PROP.	
Transmittance	0.837
Reflectance	0.075
Absorptance	0.088
Index of Refraction	1.5223
Extinction Coefficient	0.7806 /in
DOUBLE PANE OPTICAL PROP.	
Transmittance	0.387
Reflectance	0.356
Absorptance (outer pane)	0.216
Absorptance (inner pane)	0.041
Solar Heat Gain Coefficient (SHGC)	0.432
Shading Coefficient (SC)	0.504
Optical Properties as a Function of Incident Angle	(See Table 2-24)
THERMAL PROPERTIES	
Conductivity of Glass	0.520 Btu/(h ft F)
Combined Radiative and Convective Coefficient of Argon Gap	0.316
(R-Value)	3.170
Conductance of Glass Pane	52.881 Btu/(h ft^2 F)
(R-Value)	0.019 h ft^2 F/Btu
Exterior Combined Surface Coef.	4.256 Btu/(h ft^2 F)
(R-Value)	0.235 h ft^2 F/Btu
Interior Combined Surface Coef.	1.333 Btu/(h ft^2 F)
(R-Value)	0.750 h ft^2 F/Btu
U-Value, Air-Air	0.238 Btu/(h ft^2 F)
(R-Value)	4.202 h ft^2 F/Btu
Hemispherical Infra-red Emittance	0.84 (Note 2)
Infra-red Transmittance	0
Density of Glass	154 lb/ft^3
Specific Heat of Glass	0.18 Btu/(lb F)

Note 1: Optical properties listed in this table are for direct normal radiation.
Note 2: The inside facing surface of the outer pane has emissivity = 0.04.
Note 3: Single values of index of refraction and extinction coefficient do not adequately describe the optical properties of coated glass.

hspec4.wk3, l:a1..g51; 20-Jul-95

Table 2-24. Optical Properties as a Function of Incidence Angle for Low-Emissivity Double-Pane Glazing—Case L130A

	Properties (Notes 1, 2)				
Angle	Trans	Refl	Abs Out	Abs In	SHGC
0	0.387	0.356	0.216	0.041	0.432
10	0.390	0.350	0.219	0.041	0.434
20	0.384	0.349	0.226	0.041	0.429
30	0.376	0.351	0.231	0.042	0.422
40	0.366	0.359	0.232	0.043	0.413
50	0.347	0.374	0.236	0.044	0.394
60	0.305	0.402	0.250	0.043	0.353
70	0.226	0.472	0.264	0.038	0.271
80	0.107	0.640	0.224	0.029	0.142
90	0.000	0.999	0.001	0.000	0.000
Hemis	0.323	0.391	0.235	0.041	0.369

Note1: Trans = Transmittance, Refl = Reflectance, Abs Out = Absorptance of outer pane, Abs In = Absorptance of inner pane, SHGC = Solar Heat Gain Coefficient
Hemis = Hemispherically integrated property. Transmittance, reflectance, and SHGC are overall properties for the glazing system (inside pane, argon fill, and outer pane) excluding the frame.
Note 2: Output is from WINDOW 4.1. SHGC accounts for surface coefficients, and is based on windspeed = 10.7 mph.

hspec4.wk3, b:a139..g163; Aug 03, 95

Table 2-25. Component Solar Fractions—Case L130A

ELEMENT (Note 1)	HEIGHT or LENGTH ft	WIDTH ft	MULTIPLIER	AREA ft^2	INSIDE SOLAR FRACTION	
EXTERIOR NORTH/SOUTH WALLS					(Note 2)	
Gross Wall	8.0	57.0	1.0	456.0		
Gross Window	5.0	3.0	6.0	90.0		
Window Frame Only				24.2	0.0031	
Door	6.7	3.0	1.0	20.0	0.0026	
Net Wall (Note 3)				346.0		
Insulated Wall (Note 3)				259.5	**0.0335**	
Framed Wall (Note 3)				86.5	**0.0112**	
EXTERIOR EAST/WEST WALLS						
Gross Wall	8.0	27.0	1.0	216.0		
Gross Window	5.0	3.0	3.0	45.0		
Window Frame Only				12.1	0.0016	
Net Wall (Note 3)				171.0		
Insulated Wall (Note 3)				128.3	**0.0166**	
Framed Wall (Note 3)				42.8	0.0055	
INTERIOR WALLS						
Gross Wall (Note 4)	8.0	128.0		1024.0		
Unframed Wall (Note 4)				921.6	**0.1189**	
Framed Wall (Note 4)				102.4	**0.0132**	
FLOOR/CEILING						
Gross Floor/Ceiling	57.0	27.0	1.0	1539.0		
Insulated Floor/Ceiling (Note 5)				1385.1	**0.1788**	
Framed Floor/Ceiling (Note 5)				153.9	**0.0199**	
TRANSMITTED SOLAR, INTERIOR DISTRIBUTION SUMMARY						
Total Opaque Interior Surface Area (Note 6)				6272.7	**0.8096**	
Solar to Air (or low mass furnishings)					0.1750	(Note 7)
Solar Lost (back out through windows)					**0.0154**	(Note 8)

Note 1: Changes to Case L100A are highlighted with bold font.

Note 2: Solar energy transmitted through windows is assumed as distributed to interior opaque surfaces in proportion to their areas. Only the radiation not directly absorbed by lightweight furnishings (assumed to exist only for the purpose of calculating inside solar fraction) or lost back out through windows is distributed to interior opaque surfaces.

Note 3: Net wall area is gross wall area less the rough opening areas of the windows and door. Insulated and framed exterior wall sections are defined in Figure 2-4. ASHRAE framed area fraction of 0.25 is assumed for 2x4 16" O.C. construction.

Note 4: Width is the total length of all interior walls. Framed wall area is assumed to be 10% of gross wall area for 2x4 16" O.C. framing. Only one side of the wall is considered for listed area. This area is multiplied by 2 for determining solar fractions. Solar fractions shown are for just one side of the interior wall.

Note 5: Insulated and framed floor and ceiling sections are defined in Figures 2-5 and 2-6 respectively. ASHRAE roof/ceiling framing area fraction of 0.1 applied to both ceiling and floor.

Note 6: Total area of just those surfaces to which an inside solar fraction is applied.

Note 7: Based on the midpoint of the range given by SUNCODE-PC User's Manual, p. 2-16.

Note 8: Calculated using the algorithm described in Appendix E.

hspec4.wk3, c:a60..g106 20-Jul-95

2.3.4 Case L140A: Zero Window Area

Case L140A is **exactly as Case L100A except** the gross window area (glass and frame) is replaced with the Case L100A solid exterior wall materials of Figure 2-4 (Table 2-6 is the corresponding supplementary table). The following tables summarize the changes:

- Table 2-26. Building Thermal Summary - Case L140A
- Table 2-27. Component Surface Areas - Case L140A.

Table 2-26. Building Thermal Summary—Case L140A

ELEMENT (Note 1)	AREA ft^2	R $h*ft^2*F/Btu$	U $Btu/(h*ft^2*F)$	UA Btu/(h*F)	HEATCAP Btu/F
Exterior Walls (Note 2)	**1304**	11.76	0.085	**110.9**	**1745**
North Windows	**0**	0.96	1.039	**0.0**	
East Windows	**0**	0.96	1.039	**0.0**	
West Windows	**0**	0.96	1.039	**0.0**	
South Windows	**0**	0.96	1.039	**0.0**	
Doors	40	3.04	0.329	13.2	62
Ceiling/Attic/Roof	1539	20.48	0.049	75.1	1665
Floor	1539	14.15	0.071	108.8	1471
Infiltration					
Colorado Springs, CO				118.2	
Las Vegas, NV				136.9	
Interior Walls	1024				1425
TOTAL BUILDING					**6367**
Excluding Infiltration				**308.0**	
Including Infiltration (Colorado Springs, CO)				**426.1**	
Including Infiltration (Las Vegas, NV)				**444.9**	

Note 1: Changes to Case L100A are highlighted by bold font. R- and U- values include surface coefficients.
Note 2: Excludes area of windows and doors. ASHRAE framed area fraction of 0.25 is assumed for 2x4 16" O.C. construction.

Table 2-27. Component Surface Areas—Case L140A

ELEMENT		HEIGHT ft	WIDTH ft	AREA ft^2
EXTERIOR NORTH/SOUTH WALLS				
Gross Wall		8.0	57.0	456.0
Door		6.7	3.0	20.0
Net Wall	(Note 1)			**436.0**
Insulated Wall	(Note 1)			**327.0**
Framed Wall	(Note 1)			**109.0**
EXTERIOR EAST/WEST WALLS				
Gross Wall		8.0	27.0	216.0
Insulated Wall	(Note 1)			**162.0**
Framed Wall	(Note 1)			**54.0**

Note 1: Net wall area is the gross wall area less the rough opening areas of the windows and door. Insulated and framed exterior wall sections are defined in Figure 2-4. ASHRAE framed area fraction of 0.25 is assumed for 2x4 16" O.C. construction.

hspec4.wk3, r:a153..g194 20-Jul-95

2.3.5 Case L150A: South-Oriented Windows

This case is **exactly as Case L100A except** that all windows have been moved to the South wall. These changes are summarized in the following:

- Figure 2-11. Exterior Wall and South Window Locations - Case L150A
- Figure 2-12. South Wall Elevation - Case L150A
- Table 2-28. Building Thermal Summary - Case L150A
- Table 2-29. Surface Component Areas and Solar Fractions - Case L150A.

Note: Interior walls are same as for Case L100A

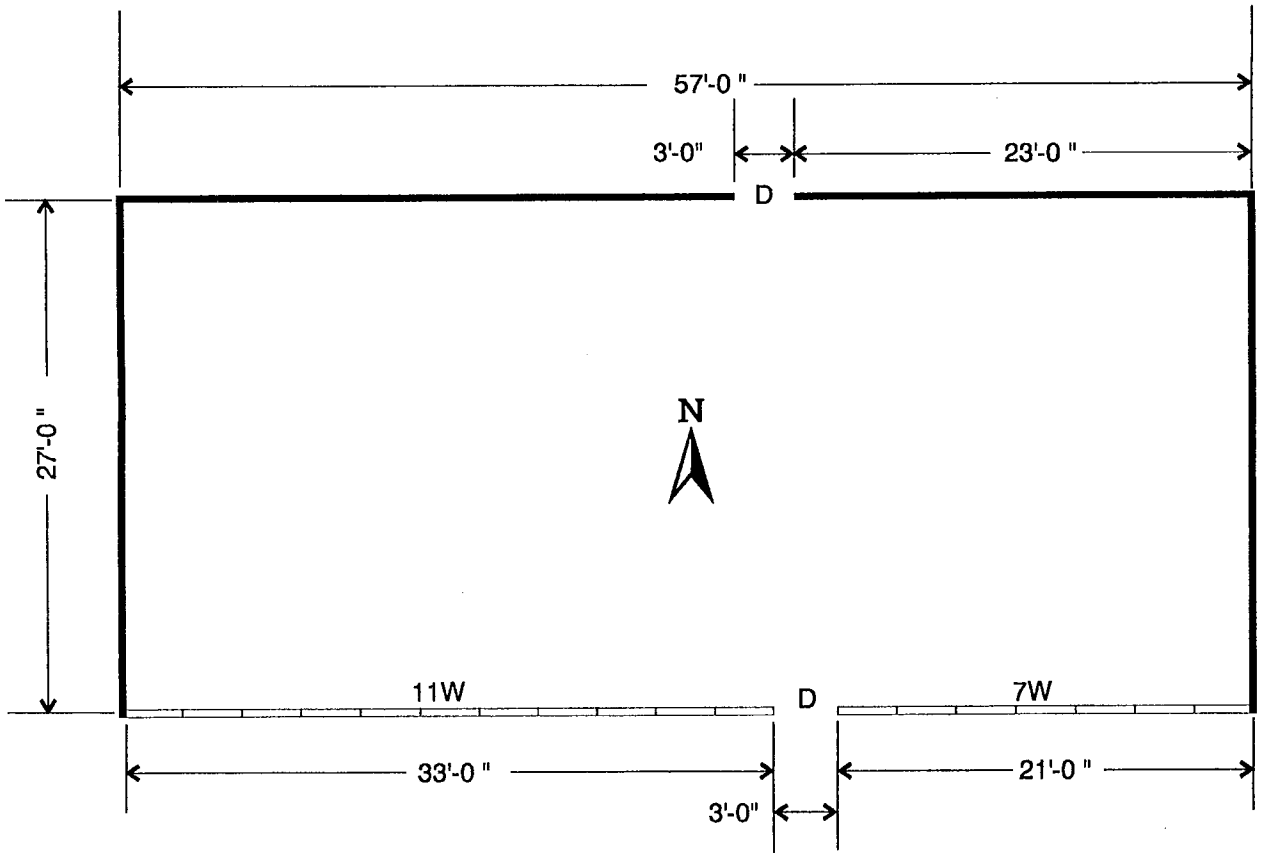

Plan

Legend:

#W:

W = window (3′ wide x 5′ high)

= number of windows along given length of exterior wall

D = Solid-core wood door (3′ wide x 6′ 8″ high)

Figure 2-11. Exterior wall and south window locations—Case L150A

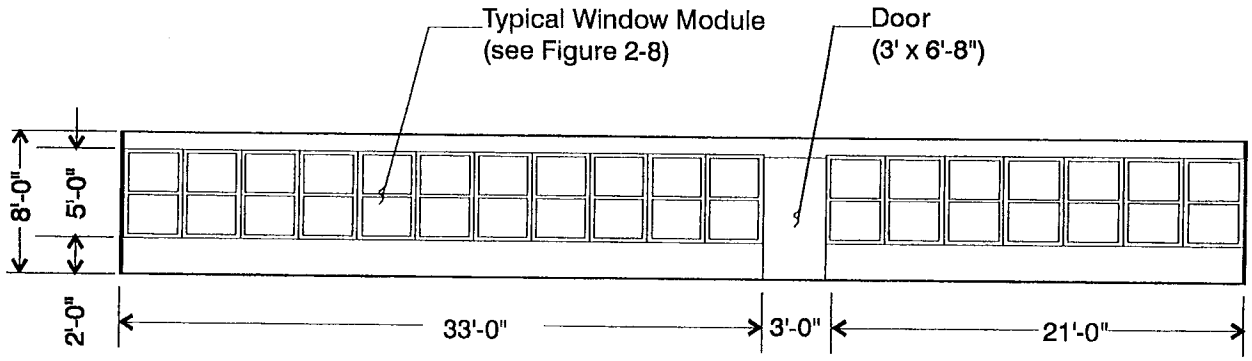

CD-RH06-A0327331

Figure 2-12. South wall elevation—Case L150A

Table 2-28. Building Thermal Summary—Case L150A

ELEMENT (Note 1)	AREA ft^2	R $h*ft^2*F/Btu$	U $Btu/(h*ft^2*F)$	UA Btu/(h*F)	HEATCAP Btu/F
Exterior Walls (Note 2)	1034	11.76	0.085	87.9	1383
North Windows	**0**	0.96	1.039	**0.0**	
East Windows	**0**	0.96	1.039	**0.0**	
West Windows	**0**	0.96	1.039	**0.0**	
South Windows	**270**	0.96	1.039	**280.5**	
Doors	40	3.04	0.329	13.2	62
Ceiling/Attic/Roof	1539	20.48	0.049	75.1	1665
Floor	1539	14.15	0.071	108.8	1471
Infiltration					
Colorado Springs, CO				118.2	
Las Vegas, NV				136.9	
Interior Walls	1024				1425
TOTAL BUILDING					6006
Excluding Infiltration				565.5	
Including Infiltration (Colorado Springs, CO)				683.7	
Including Infiltration (Las Vegas, NV)				702.4	

Note 1: Changes to Case L100A are highlighted by bold font. R- and U- values include surface coefficients.
Note 2: Excludes area of windows and doors. ASHRAE framed area fraction of 0.25 is assumed for 2x4 16" O.C. construction.

hspec4.wk3, r:a203..g225; 20-Jul-95

Table 2-29. Surface Component Areas and Solar Fractions—Case L150A

ELEMENT (Note 1)	HEIGHT ft	WIDTH ft	MULTIPLIER	AREA ft^2	INSIDE SOLAR FRACTION
EXTERIOR SOUTH WALL					(Note 2)
Gross Wall	8.0	57.0	1.0	456.0	
Gross Window	**5.0**	**3.0**	**18.0**	**270.0**	
Window Frame Only				**72.7**	**0.0093**
Door	6.7	3.0	1.0	20.0	0.0026
Net Wall	(Note 3)			**166.0**	
Insulated Wall	(Note 3)			**124.5**	**0.0159**
Framed Wall	(Note 3)			**41.5**	**0.0053**
EXTERIOR NORTH WALL					
Gross Wall	8.0	57.0	1.0	456.0	
Door	6.7	3.0	1.0	20.0	0.0026
Net Wall	(Note 3)			**436.0**	
Insulated Wall	(Note 3)			**327.0**	**0.0418**
Framed Wall	(Note 3)			**109.0**	**0.0139**
EXTERIOR EAST/WEST WALLS					
Gross Wall	8.0	27.0	1.0	216.0	
Insulated Wall	(Note 3)			**162.0**	**0.0207**
Framed Wall	(Note 3)			**54.0**	**0.0069**

Note 1: Changes to Case L100A are highlighted with bold font. All windows have been moved to the south wall.
Note 2: Solar energy transmitted through windows is assumed as distributed to interior opaque surfaces in proportion to their areas. Only the radiation not directly absorbed by lightweight furnishings (assumed to exist only for the purpose of calculating inside solar fraction) or lost back out through windows is distributed to interior opaque surfaces.
Note 3: Net wall area is gross wall area less the rough opening areas of the windows and door. Insulated and framed exterior wall sections are defined in Figure 2-4. ASHRAE framed area fraction of 0.25 is assumed for 2x4 16" O.C. construction.

hspec4.wk3, j:a1..g30 20-Jul-95

2.3.6 Case L155A: South-Oriented Windows with Overhang

Case L155A is **exactly as Case L150A except** that an opaque overhang has been included at the top of the south exterior wall. The overhang extends outward from this wall 2.5 ft. as shown in Figure 2-13. The overhang traverses the entire length of the south wall.

Depending on the input capabilities of your software, it may not be possible to model the exact geometry of the windows and overhang as shown in Figure 2-13. If this is the case, a simplified model of the south wall may be used such as the conceptual description shown in Figure 2-14. In Figure 2-14, glass and horizontally oriented framing directly above and below the glass are aggregated into long units with all elements located properly in the vertical direction to obtain the nearly equivalent shading of Figure 2-13. Proper dimensions for this example are obtained using Figure 2-8 (Case L100A), Figure 2-13, and Table 2-29 (Case L150A). The vertically oriented framing is similarly aggregated in a separate area so that equivalent shading will also result. While the overhang is not shown in Figure 2-14, it must be included as shown in Figure 2-13.

Recall from Section 1, this test requires that you use the most detailed level of modeling your tool will allow.

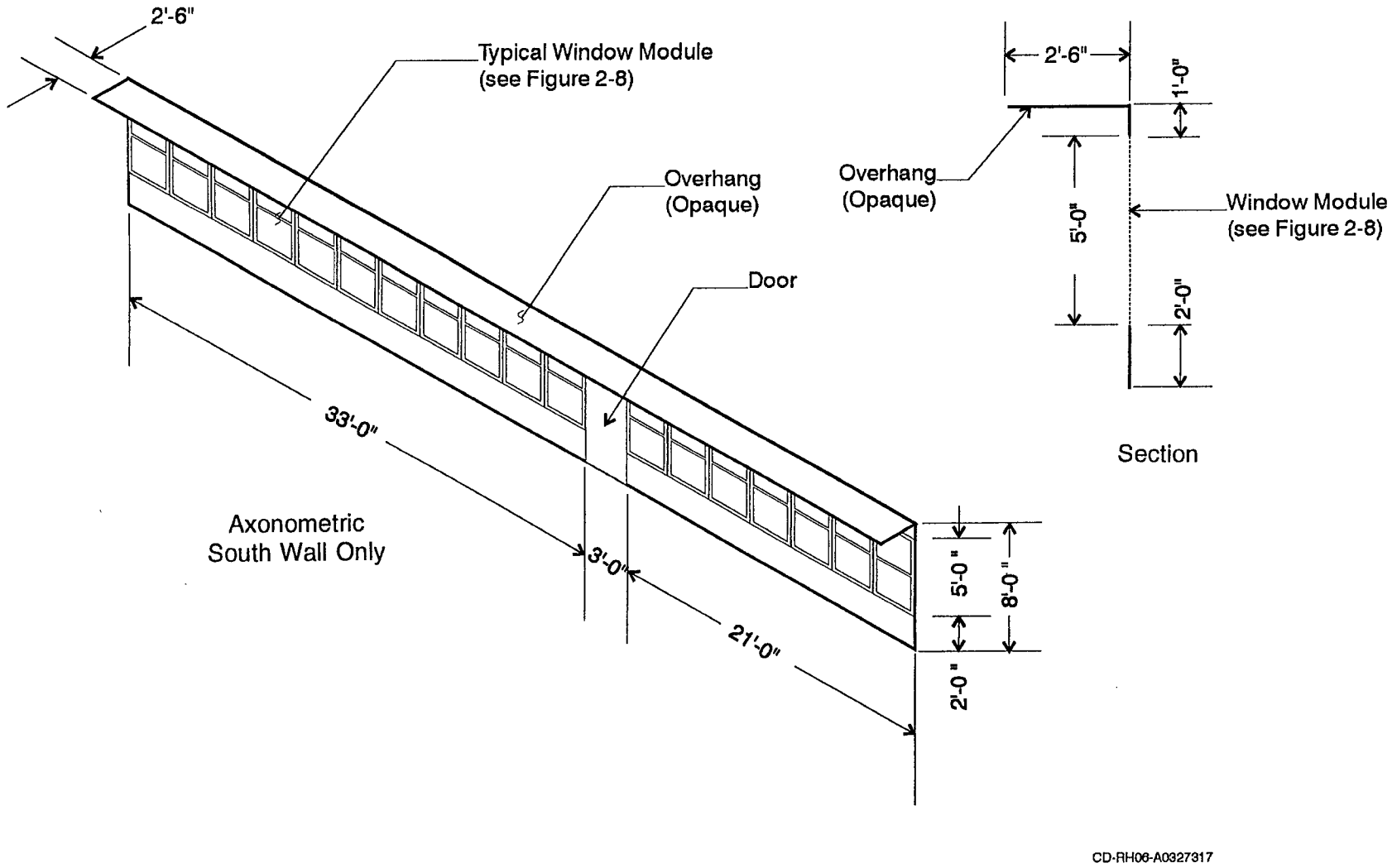

Figure 2-13. South overhang—Case L155A

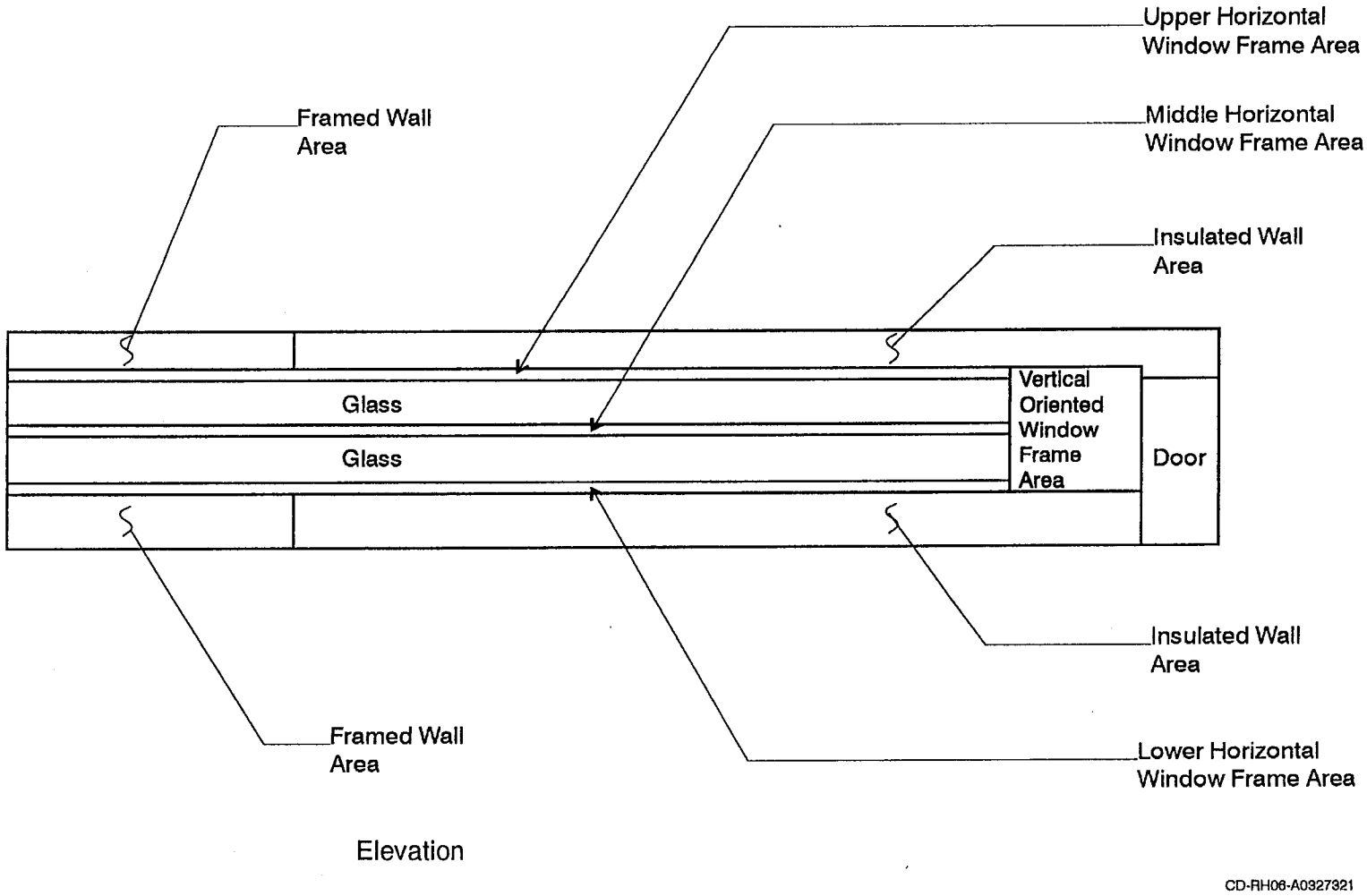

Figure 2-14. Example model of south wall for simulating south overhang effect in Case L155A

2.3.7 Case L160A: East- and West-Oriented Windows

This case is **exactly as Case L100A except** that all windows have been moved to the east and west walls. These changes are summarized in the following:

- Figure 2-15. East and West Window Locations, Plan - Case L160A
- Figure 2-16. East/West Wall Elevation - Case L160A
- Table 2-30. Building Thermal Summary - Case L160A
- Table 2-31. Surface Component Areas and Solar Fractions - Case L160A.

Note: Interior walls are same as Case L100A

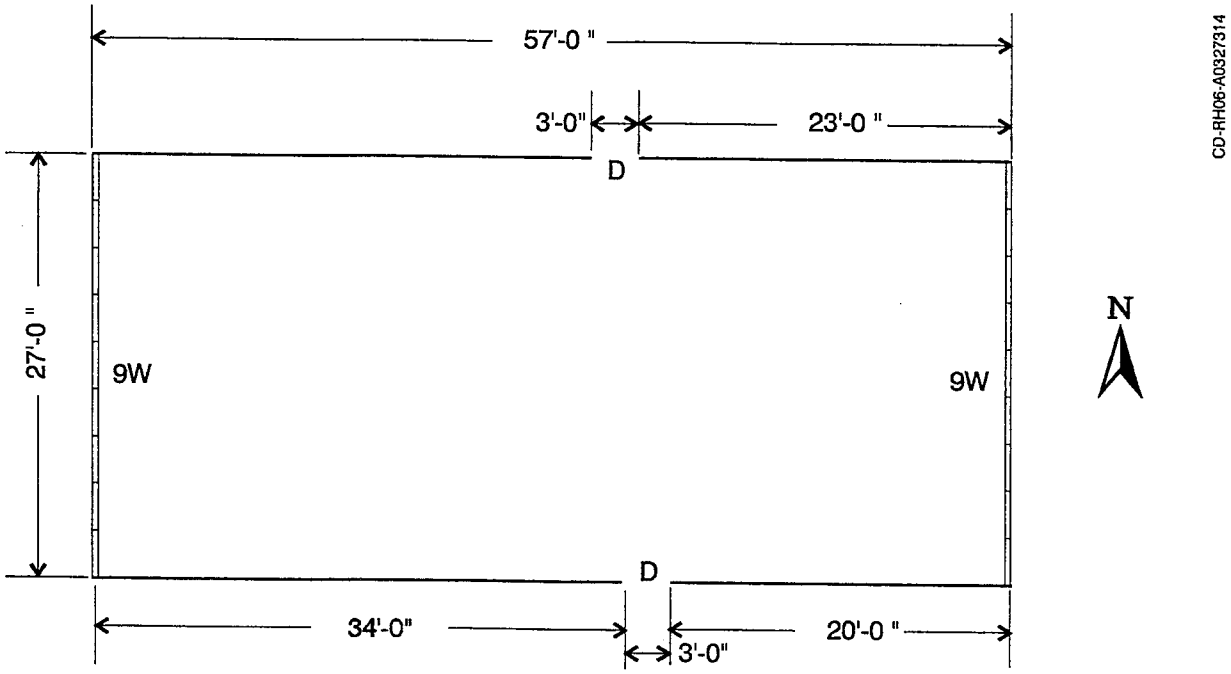

Legend

#W:

W = window (3′ wide x 5′ high), see Figure 2-8

= number of windows along given length of exterior wall

D = Solid-core wood door (3′ wide x 6′ 8″ high)

Figure 2-15. East and west window locations—Case L160A

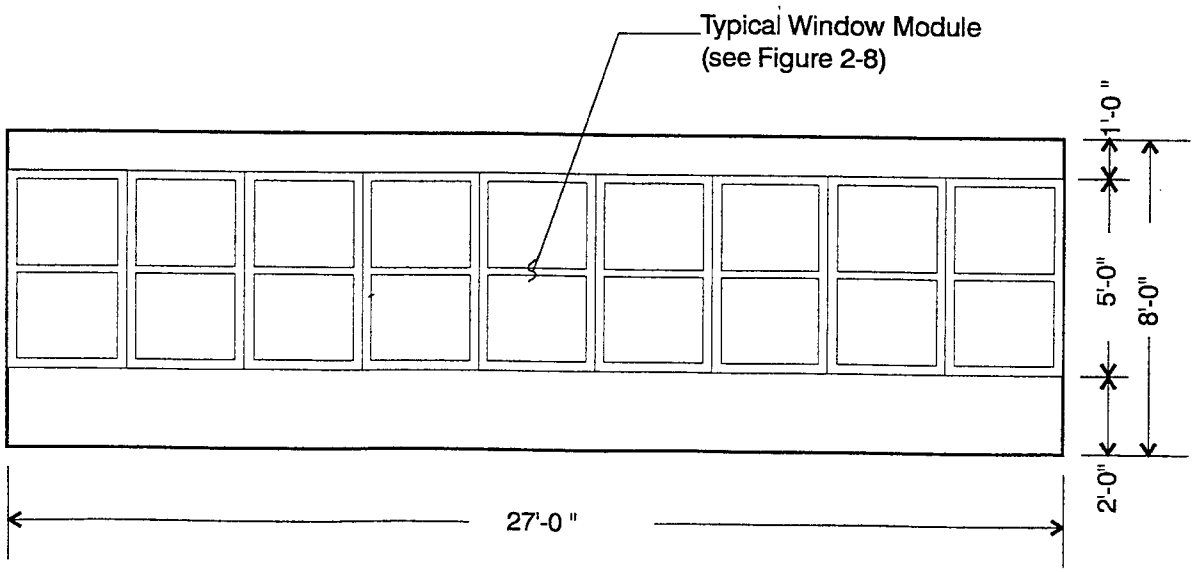

Figure 2-16. East/West wall elevation—Case L160A

CD-RH06-A0327315

Table 2-30. Building Thermal Summary—Case L160A

ELEMENT (Note 1)	AREA ft^2	R $h*ft^2*F/Btu$	U $Btu/(h*ft^2*F)$	UA Btu/(h*F)	HEATCAP Btu/F
Exterior Walls (Note 2)	1034	11.76	0.085	87.9	1383
North Windows	**0**	0.96	1.039	**0.0**	
East Windows	**135**	0.96	1.039	**140.2**	
West Windows	**135**	0.96	1.039	**140.2**	
South Windows	**0**	0.96	1.039	**0.0**	
Doors	40	3.04	0.329	13.2	62
Ceiling/Attic/Roof	1539	20.48	0.049	75.1	1665
Floor	1539	14.15	0.071	108.8	1471
Infiltration					
Colorado Springs, CO				118.2	
Las Vegas, NV				136.9	
Interior Walls	1024				1425
TOTAL BUILDING					6006
Excluding Infiltration				565.5	
Including Infiltration (Colorado Springs, CO)				683.7	
Including Infiltration (Las Vegas, NV)				702.4	

Note 1: Changes to Case L100A are highlighted by bold font. R- and U- values include surface coefficients.
Note 2: Excludes area of windows and doors. ASHRAE framed area fraction of 0.25 is assumed for 2x4 16" O.C. construction.

hspec4.wk3, r:a232..g254 20-Jul-95

Table 2-31. Surface Component Areas and Solar Fractions—Case L160A

ELEMENT (Note 1)	HEIGHT ft	WIDTH ft	MULTIPLIER	AREA ft^2	INSIDE SOLAR FRACTION
EXT. SOUTH/NORTH WALLS					(Note 2)
Gross Wall	8.0	57.0	1.0	456.0	
Door	6.67	3.0	1.0	20.0	0.0026
Net Wall	(Note 3)			**436.0**	
Insulated Wall	(Note 3)			**327.0**	**0.0418**
Framed Wall	(Note 3)			**109.0**	**0.0139**
EXT. EAST/WEST WALLS					
Gross Wall	8.0	27.0	1.0	216.0	
Gross Window	**5.0**	**3.0**	**9.0**	**135.0**	
Window Frame Only				**36.4**	**0.0047**
Net Wall	(Note 3)			**81.0**	
Insulated Wall	(Note 3)			**60.8**	**0.0078**
Framed Wall	(Note 3)			**20.3**	**0.0026**

Note 1: Changes to Case L100A are highlighted with bold font. All windows moved to the east and west walls.
Note 2: Solar energy transmitted through windows is assumed as distributed to interior opaque surfaces in proportion to their areas. Only the radiation not directly absorbed by lightweight furnishings (assumed to exist only for the purpose of calculating inside solar fraction) or lost back out through windows is distributed to interior opaque surfaces.
Note 3: Net wall area is gross wall area less the rough opening areas of the windows and door. Insulated and framed exterior wall sections are defined in Figure 2-4. ASHRAE framed area fraction of 0.25 is assumed for 2x4 16" O.C. construction.

hspec4.wk3, j:a47..g71; 20-Jul-95

2.3.8 Case L170A: No Internal Loads

Case L170A is **exactly as Case L100 except** the internal sensible and latent loads in the conditioned zone are set to zero for all hours of the entire year.

2.3.9 Case L200A: Energy Inefficient

This case is **exactly as Case L100A except** for the following changes:

- Infiltration for the conditioned zone is 1.5 ACH
- Exterior wall fiberglass insulation is replaced with an air gap
- Floor fiberglass insulation is eliminated
- Ceiling fiberglass insulation is reduced from 5.5" to 3.5".

The following figures and tables highlight information that is expected to be useful to most users.

- Figure 2-17. Exterior Wall Plan Section - Case L200A
- Figure 2-18. Floor Above Vented Crawl Space, Section - Case L200A
- Figure 2-19. Ceiling Section - Case L200A
- Table 2-15. Conditioned Zone Infiltration for Case L110A (see Case L110A)
- Table 2-32. Building Thermal Summary - Case L200A.

Relevant supplementary tables that include more detailed information are:

- Table 2-33. Material Descriptions, Exterior Wall - Case L200A
- Table 2-34. Material Descriptions, Floor Above Vented Crawl Space - Case L200A
- Table 2-35. Material Descriptions, Ceiling - Case L200A
- Table 2-36. Material Descriptions, Ceiling with Attic as Material Layer - Case L200A (for calculation of equivalent ceiling/attic/roof composite R-value, see discussion of the base building attic in Section 2.2).

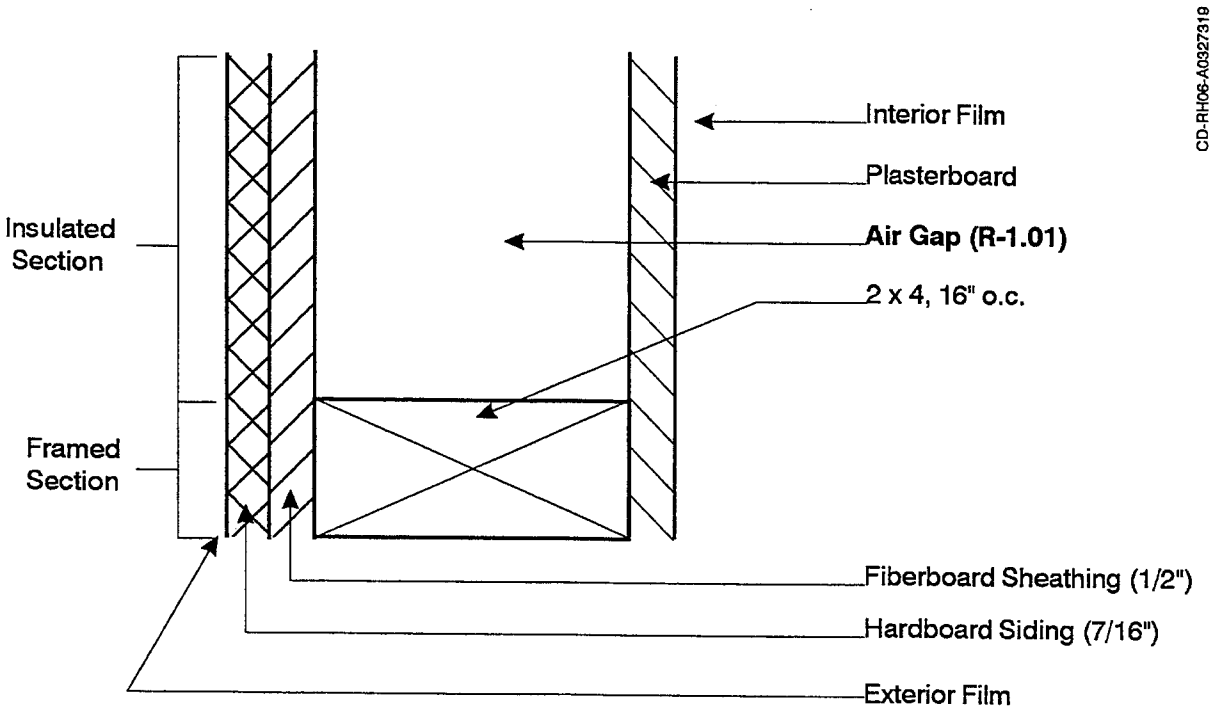

Note: Changes to Case L100A are highlighted with bold font.

Figure 2-17. Exterior wall plan section—Case L200A

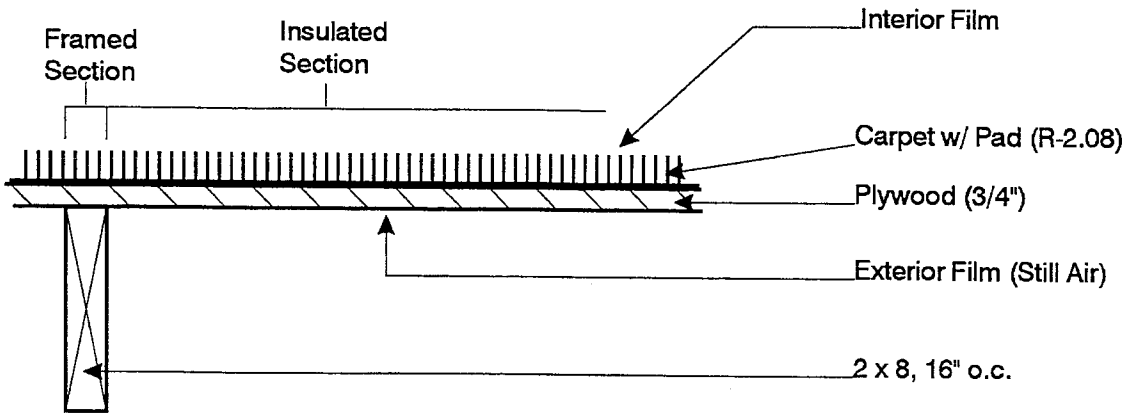

Note: R-11 batt insulation of Case L100A has been removed.

Figure 2-18. Floor above vented crawl space, section—Case L200A.

CD-RH06-A0327322

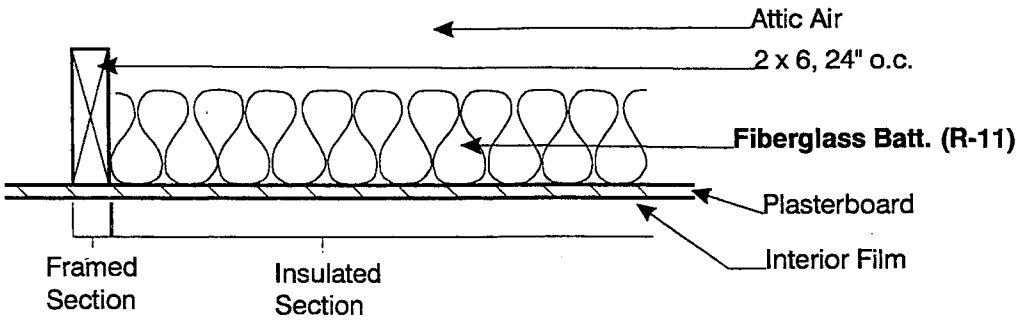

Note: Changes to Case L100A are highlighted with bold font.

Figure 2-19. Ceiling section—Case L200A

Table 2-32. Building Thermal Summary—Case L200A

ELEMENT (Note 1)	AREA ft^2	R $h*ft^2*F/Btu$	U $Btu/(h*ft^2*F)$	UA Btu/(h*F)	HEATCAP Btu/F (Note 2)
Exterior Walls (Note 3)	1034	**4.84**	**0.207**	**213.7**	**1356**
North Windows	90	0.96	1.039	93.5	
East Windows	45	0.96	1.039	46.7	
West Windows	45	0.96	1.039	46.7	
South Windows	90	0.96	1.039	93.5	
Doors	40	3.04	0.329	13.2	62
Ceiling/Attic/Roof (Note 4)	1539	**11.75**	**0.085**	**130.9**	**1356**
Floor (Note 4)	1539	**4.24**	**0.236**	**363.3**	**948**
Infiltration (Note 5)					
Colorado Springs, CO				**264.5**	
Las Vegas, NV				**306.6**	
Interior Walls	1024				1425
TOTAL BUILDING					**5147**
Excluding Infiltration				**1001.5**	
Including Infiltration (Colorado Springs, CO)				**1266.1**	
Including Infiltration (Las Vegas, NV)				**1308.1**	

Note 1: Changes to Case L100A are highlighted by bold font. R- and U- values include surface coefficients.

Note 2: Heat capacity includes building mass within the thermal envelope (e.g., insulation and insulation thickness of structural framing are included, exterior siding and roof/attic mass are excluded).

Note 3: Excludes area of windows and doors. ASHRAE framed area fraction of 0.25 is assumed for 2x4 16" O.C. construction.

Note 4: ASHRAE roof/ceiling framing area fraction of 0.1 applied to both ceiling and floor.

Note 5: Infiltration UA = (infiltration mass flow)*(specific heat). Assumes air properties: specific heat = 0.240 Btu/(lb*F); density = 0.075 lb/ft^3 at sea level, adjusted for altitude per Appendix B. The following values were used to obtain infiltration UA:

Location	ACH	Volume (ft^3)	Altitude (ft)	UAinf (Btu/(h*F))
Colo Sprgs	1.5	12312	6145	264.5
Las Vegas	1.5	12312	2178	306.6

hspec4.wk3, r:a270..g301 20-Jul-95

2.3.9.1 Case L200A: Supplementary Tables

The following data were used for generating reference results. The previous figures and tables summarized, and are based on, the data presented in this section. We expect that many HERS tools will not be able to directly input much of the data in this section (e.g., material densities, specific heats, interior solar fractions, surface coefficients, etc.). However, if your models are capable of receiving this level of detail, then you must use these tables where possible.

Table 2-33. Material Descriptions, Exterior Wall—Case L200A

EXTERIOR WALL (inside to outside) **(Note 1)** ELEMENT (Source)	Thickness in	R h*ft²*F/ Btu	U Btu/ h*ft²*F	k Btu/ h*ft*F	DENSITY lb/ft³	Cp Btu/lb*F
Int Surf Coef		0.685	1.460			
Plasterboard	0.5	0.450	2.222	0.0926	50.0	0.26
Air gap (Note 2)	**3.5**	**1.010**	**0.990**			
Frame 2x4 16" O.C. (Note 3)	3.5	4.373	0.229	0.0667	32.0	0.33
Fiberboard sheathing	0.5	1.320	0.758	0.0316	18.0	0.31
Hardboard Siding, 7/16"	0.44	0.670	1.492	0.0544	40.0	0.28
Ext Surf Coef (Note 4)		0.174	5.748			
Total air - air, non-frame section		**4.309**	**0.232**			
Total air - air, frame section		**7.672**	**0.130**			
Total air - air, composite section	(Note 5)	**4.839**	**0.207**			
Total surf - surf, non-frame sect.		**3.450**	**0.290**			
Total surf - surf, frame section		**6.813**	**0.147**			
Total surf - surf, composite sect.	(Note 6)	**3.981**	**0.251**			

Note 1: Changes to Case L100A are highlighted in bold font.

Note 2: Non-frame (air gap) section only. See Figure 2-17 for section view of wall; airgap replaces fiberglass insulation for this case.

Note 3: Framed section only, see Figure 2-17 for section view of wall.

Note 4: 10.7 mph wind speed and brick/rough plaster roughness; see Appendix C for more on exterior film coefficients.

Note 5: Total composite R-values based on 25% frame area section per ASHRAE.

Note 6: Total surf-surf composite R-value is the total air-air composite R-value less the resistances due to the film coefficients.

Table 2-34. Material Descriptions, Floor Above Vented Crawl Space—Case L200A

FLOOR ABOVE VENTED CRAWL SPACE (inside to outside) **(Note 1)** ELEMENT	Thickness in	R h*ft²*F/ Btu	U Btu/ h*ft²*F	k Btu/ h*ft*F	DENSITY lb/ft³	Cp Btu/lb*F
Int Surf Coef (Note 2)		0.765	1.307			
Carpet w/ fibrous pad (Note 3)		2.080	0.481			0.34
Plywood 3/4"	0.75	0.937	1.067	0.0667	34.0	0.29
Joists 2x8 16" O.C. (Note 4)						
Ext Surf Coef (Note 5)		0.455	2.200			
Total air-air		**4.237**	**0.236**			
Total surf-surf		**3.017**	**0.331**			

Note 1: Changes to Case L100A are highlighted with bold font. Fiberglass insulation was deleted for this case.

Note 2: Average of ASHRAE heating and cooling coefficients.

Note 3: There is not enough information available for modeling thermal mass of carpet.

Note 4: Because there is no insulation between joists (see Figure 2-18) and they are exposed directly to crawl space air, joists are assumed at outdoor air temperature with no insulating value and are not considered as thermal mass.

Note 5: Still air and brick/rough plaster roughness assumed; see Appendix C for more about exterior film coefficients.

hspec4.wk3 i:a1..g53 20-Jul-95

Table 2-35. Material Descriptions, Ceiling—Case L200A

CASE L200: CEILING (inside to outside), attic as unconditioned zone				(Note 1)		
ELEMENT	Thickness in	R h*ft²*F/ Btu	U Btu/ h*ft²*F	k Btu/ h*ft*F	DENSITY lb/ft³	Cp Btu/lb*F
CEILING (1539 ft² total area)						
Int Surf Coef		0.765	1.307			
Plasterboard	0.5	0.450	2.222	0.0926	50.0	0.26
Fiberglass batt (Note 2)	**3.5**	**11.000**	**0.091**	**0.0265**	0.6	0.20
Joists 2x6 24" O.C. (Note 3)	**3.5**	**4.373**	**0.229**	0.0667	32.0	0.33
Int Surf Coef		0.765	1.307			
Total air-air, insulated section		**12.980**	**0.077**			
Total air-air, framed section		**6.353**	**0.157**			
Total air-air, composite section	(Note 4)	**11.754**	**0.085**			
Total surf-surf, composite sec.	(Note 4)	**10.224**	**0.098**			

Note 1: Changes to Case L100A are highlighted by bold font. Use this table if attic modeled as separate zone.

Note 2: Insulated section only. See Figure 2-19 for section view of ceiling.

Note 3: Framed section only, see Figure 2-19 for section view of ceiling. Modeled framing thickness is reduced to that for insulation; remaining length is assumed to be at attic air temperature and is not considered for thermal mass.

Note 4: Based on 90% insulated section and 10% frame section per ASHRAE; applies to temperature difference between room air and attic air. The "Composite surf-surf" R-value is the composite air-air R-value less the two interior film coefficient R-values.

Table 2-36. Material Descriptions, Ceiling with Attic as Material Layer

CASE L200: CEILING/ATTIC/ROOF (inside to outside) **(Note 1)**						
ELEMENT	Thickness in	R h*ft²*F/ Btu	U Btu/ h*ft²*F	k Btu/ h*ft*F	DENSITY lb/ft³	Cp Btu/lb*F
CEILING/ATTIC/ROOF (1539 ft² total area, includes gables)						
Int Surf Coef		0.765	1.307			
Plasterboard	0.5	0.450	2.222	0.0926	50.0	0.26
Fiberglass batt (Note 2)	**3.5**	**11.000**	**0.091**	**0.0265**	0.6	0.20
Joists 2x6 24" O.C. (Note 3)	**3.5**	**4.373**	**0.229**	0.0667	32.0	0.33
Attic air (Note 4)		**1.300**	**0.769**			
Total roof deck/gable, surf-surf (Note 5)		0.899	1.112			
Ext Surf Coef (Note 6)		0.174	5.748			
SUMMARY CEILING/ATTIC/ROOF						
Total air-air, insulated section		**14.588**	**0.069**			
Total air-air, framed section		**7.961**	**0.126**			
Total air-air, composite section	(Note 7)	**13.467**	**0.074**			
Total surf-surf, composite section	(Note 8)	**12.528**	**0.080**			

Note 1: Changes to Case L100A are highlighted by bold font. Use this table if attic modeled as material layer.

Note 2: Insulated section only. See Figure 2-19 for section view.

Note 3: Framed section only, see Figure 2-19 for section view of ceiling/attic/roof. Thickness is the same as for insulation; remaining length is assumed to be at attic air temperature and is not considered as thermal mass.

Note 4: Average winter/summer values for natural ventilation (2.4 ACH), R-11 ceiling insulation, ext abs = 0.6.

Note 5: From Table 2-9 (Case L100A).

Note 6: Scaled to 1539 ft².

Note 7: Based on 10% frame area fraction per ASHRAE; applies to temperature difference between room air and attic air.

Note 8: Total air-air resistance (see above) less film coefficients.

hspec4.wk3 i:a60..g116 20-Jul-95

2.3.10 Case L202A: Low Exterior Solar Absorptance Associated with Light Exterior Surface Color

This case is **exactly as Case L200A except** that exterior shortwave (visible and UV) absorptance (α_{ext}) is 0.2 for the following opaque exterior surfaces exposed to solar radiation:

- Exterior walls
- Roof
- End gables
- Doors.

Window frames remain at $\alpha_{ext} = 0.6$.

2.3.11 Slab-on-Grade Series (Cases L302A and L304A)

Cases L302A and L304A are designed to compare the results of HERS software to reference software results using the steady-state ASHRAE perimeter method for modeling slab-on-grade heat loss (ASHRAE Handbook 1993 Fundamentals, p. 25.12; Wang, 1979). Although this is a simplified method for ground-coupling analysis, we recognize that it is possible a HERS tool could use a more detailed model for slab-on-grade ground coupling, which could have a significant effect on the output. Therefore, we have included the results of more detailed ground-coupling analysis as part of the Volume 2, Section 3 reference results. This serves to widen the range of reference results (and acceptable outputs from HERS tools) for the slab-on-grade cases. Case descriptions for more detailed ground-coupling analysis are given in Appendix G, where Cases L302B and L304B are the more detailed versions of cases L302A and L304A, respectively.

For Cases L302A and L304A, the ASHRAE perimeter method assumes heat loss occurs along the entire 168 ft of full slab perimeter. In both cases an R-2.08 carpet with pad is present at the interior surface of the slab.

For this series Case L302A is the base case for Case L304A.

Output Requirements

Annual or seasonal heating loads for Colorado Springs, Colorado are the only required outputs for these cases.

2.3.11.1 Case L302A: Slab-on-Grade, Uninsulated ASHRAE Slab

This case is **exactly as Case L100A except** that the floor above vented crawl space has been changed to an uninsulated slab as shown in:

- Figure 2-20. Uninsulated Slab-on-Grade Section - Case L302A
- Table 2-37. Building Thermal Summary - Case L302A.

Note that a carpet is present on the interior surface of the slab.

The following supplemental table shows equivalent inputs for modeling the ASHRAE perimeter method with the reference software:

- Table 2-38. Material Descriptions, Slab on Grade Floor - Case L302A.

Because Table 2-38 contains only new information relevant to slab floor construction, it is **not** highlighted with bold font.

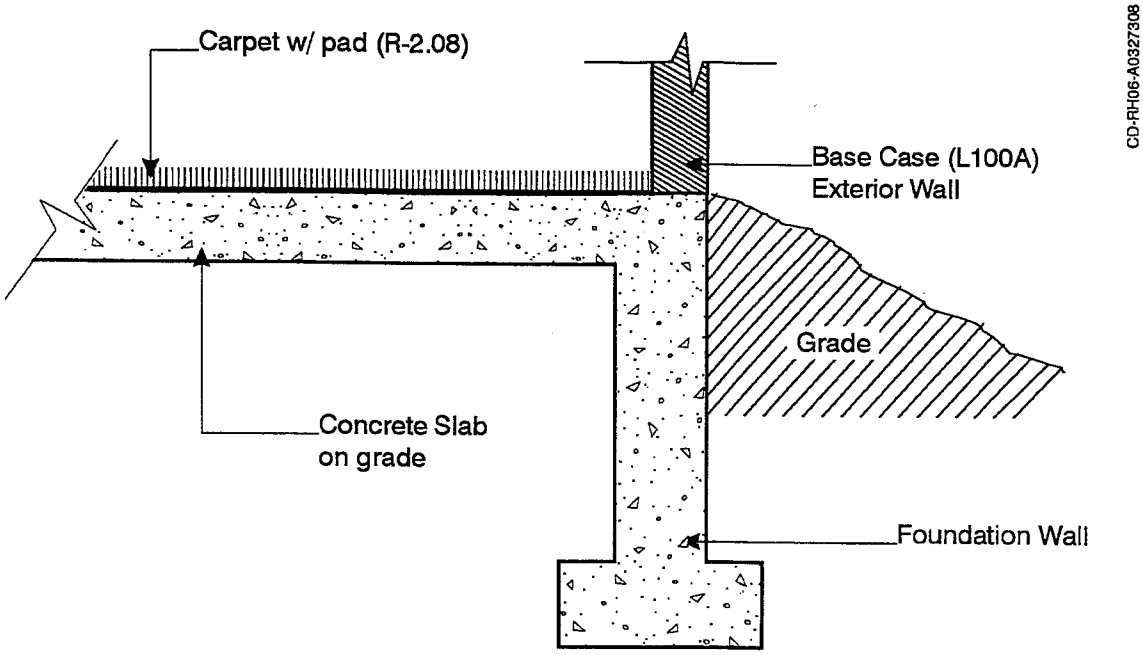

Figure 2-20. Uninsulated slab on grade, section—Case L302A

Table 2-37. Building Thermal Summary—Case L302A

ELEMENT (Note 1)	AREA ft^2	R $h*ft^2*F/Btu$	U $Btu/(h*ft^2*F)$	UA Btu/(h*F)	HEATCAP Btu/F (Note 2)
Exterior Walls (Note 3)	1034	11.76	0.085	87.9	1383
North Windows	90	0.96	1.039	93.5	
East Windows	45	0.96	1.039	46.7	
West Windows	45	0.96	1.039	46.7	
South Windows	90	0.96	1.039	93.5	
Doors	40	3.04	0.329	13.2	62
Ceiling/Attic/Roof (Note 4)	1539	20.48	0.049	75.1	1665
Floor	1539	**9.41**	**0.106**	**163.6**	**(Note 5)**
Infiltration					
Colorado Springs, CO				118.2	
Las Vegas, NV				136.9	
Interior Walls	1024				1425
TOTAL BUILDING					**4535**
Excluding Infiltration				**620.3**	
Including Infiltration (Colorado Springs, CO)				**738.5**	
Including Infiltration (Las Vegas, NV)				**757.2**	

Note 1: Changes to Case L100A are highlighted by bold font. R- and U- values include surface coefficients.

Note 2: Heat capacity includes building mass within the thermal envelope (e.g., insulation and insulation thickness of structural framing are included, exterior siding and roof/attic mass are excluded).

Note 3: Excludes the area of windows and doors. ASHRAE framed area fraction of 0.25 is assumed for 2x4 16" O.C. construction.

Note 4: ASHRAE roof/ceiling framing area fraction of 0.1 applied to ceiling.

Note 5: For the ASHRAE slab model, thermal mass effects are incorporated into steady-state heat loss coefficients.

hspec4.wk3, r:a460..g487 19-Sep-95

Table 2-38. Material Descriptions, Slab-On-Grade Floor—Case L302A

FLOOR, SLAB-ON-GRADE, UNINSULATED ASHRAE

ELEMENT (inside to outside)	R $h*ft^2*F/Btu$	U $Btu/h*ft^2*F$
Int Surf Coef (Note 1)	0.765	1.307
Carpet with fibrous pad	2.080	0.481
Slab Loss Coefficient (Note 2)	6.564	0.152
Total air-air	9.409	0.106

Note 1: Average of ASHRAE heating and cooling coefficients.

Note 2: This R-value is total air-air uninsulated slab R-value without carpet (based on the ASHRAE perimeter method for a metal stud wall) less the R-value of the listed interior film coefficient.

hspec4.wk3 k:a50..f64 21-Jul-95

2.3.11.2 Case L304A: Slab on Grade, Insulated ASHRAE Slab

This case is **exactly as Case L302A except** that the slab is insulated with R-5.4 perimeter insulation as shown in:

- Figure 2-21. Slab on Grade with Foundation Wall Exterior Insulation, Section - Case L304A
- Table 2-39. Building Thermal Summary - Case L304A.

The following supplemental table shows equivalent inputs for modeling the ASHRAE perimeter method with the reference software:

- Table 2-40. Material Descriptions, Slab on Grade Floor - Case L304A.

Bold font in the figure and tables for Case L304A highlights changes to Case L302A.

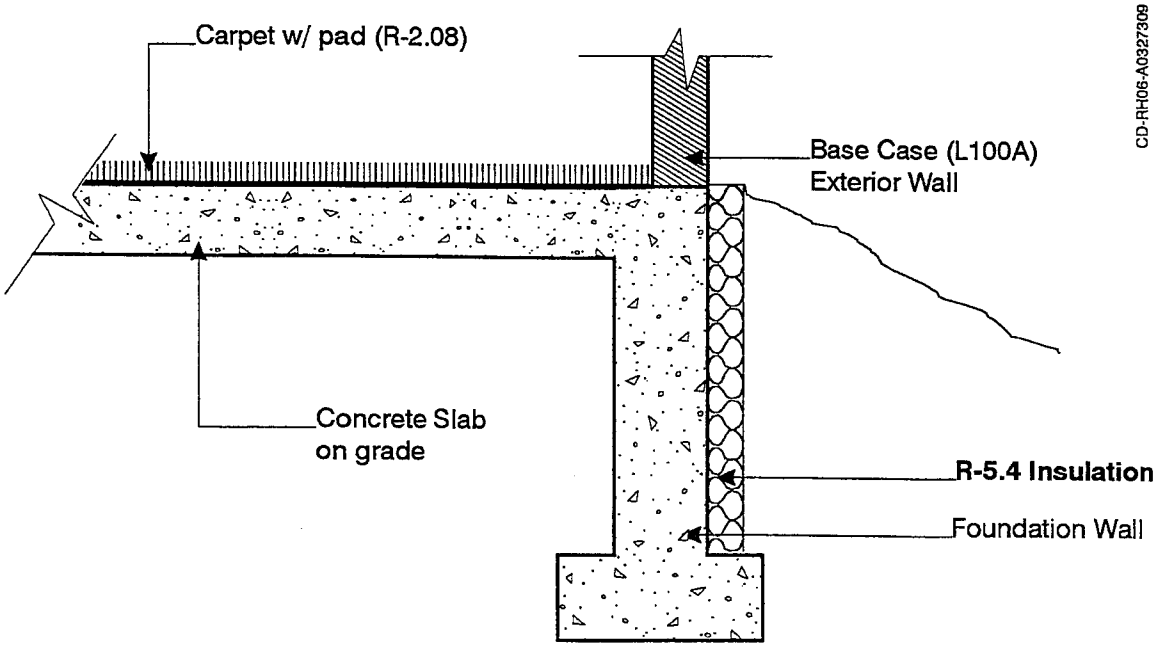

Note: Changes to Case L302A are highlighted with bold font.

Figure 2-21. Slab on grade with foundation wall exterior insulation, section—Case L304A

Table 2-39. Building Thermal Summary—Case L304A

ELEMENT (Note 1)	AREA ft^2	R $h*ft^2*F/Btu$	U $Btu/(h*ft^2*F)$	UA Btu/(h*F)	HEATCAP Btu/F (Note 2)
Exterior Walls (Note 3)	1034	11.76	0.085	87.9	1383
North Windows	90	0.96	1.039	93.5	
East Windows	45	0.96	1.039	46.7	
West Windows	45	0.96	1.039	46.7	
South Windows	90	0.96	1.039	93.5	
Doors	40	3.04	0.329	13.2	62
Ceiling/Attic/Roof (Note 4)	1539	20.48	0.049	75.1	1665
Floor	1539	**18.74**	**0.053**	**82.1**	(Note 5)
Infiltration					
Colorado Springs, CO				118.2	
Las Vegas, NV				136.9	
Interior Walls	1024				1425
TOTAL BUILDING					4535
Excluding Infiltration				**538.9**	
Including Infiltration (Colorado Springs, CO)				**657.0**	
Including Infiltration (Las Vegas, NV)				**675.8**	

Note 1: Changes to Case L302A are highlighted by bold font. R- and U- values include surface coefficients.

Note 2: Heat capacity includes building mass within the thermal envelope (e.g., insulation and insulation thickness of structural framing are included, exterior siding and roof/attic mass are excluded).

Note 3: Excludes the area of windows and doors. ASHRAE framed area fraction of 0.25 is assumed for 2x4 16" O.C. construction.

Note 4: ASHRAE roof/ceiling framing area fraction of 0.1 applied to ceiling.

Note 5: For the ASHRAE slab model, thermal mass effects are incorporated into steady-state heat loss coefficients.

hspec4.wk3, r:a500..g527 21-Jul-95

Table 2-40. Material Descriptions, Slab-On-Grade Floor—Case L304A

FLOOR, SLAB ON GRADE, INSULATED ASHRAE (Note 1) ELEMENT (inside to outside)	R $h*ft^2*F/Btu$	U $Btu/h*ft^2*F$
Int Surf Coef (Note 2)	0.765	1.307
Carpet with fibrous pad (ASHRAE)	2.080	0.481
Slab Loss Coefficient (Note 3)	**15.891**	**0.063**
Total air-air	**18.736**	**0.053**

Note 1: Changes to Case L302A are highlighted with bold font.

Note 2: Average of ASHRAE heating and cooling coefficients.

Note 3: This R-value is total air-air for an insulated slab (R-5.4 from edge to footer) without carpet, based on the ASHRAE perimeter method for metal stud wall construction, less the R-value of the interior film coefficient.

hspec4.wk3 k:a75..g91 21-Jul-95

2.3.12 Basement Series (Cases L322A and L324A)

Cases L322A and L324A are designed to compare the results of HERS software to reference software results using the ASHRAE method for modeling basement heat loss from the below-grade basement walls and slab floor (ASHRAE 1993 Fundamentals, pp. 25.10, 25.11, Latta and Boileau 1969; Wang 1979). Although this is a simplified method for ground-coupling analysis, we recognize that it is possible a HERS tool could use a more detailed model for basement ground coupling, which could have a significant effect on the output. Therefore, we have included the results of more detailed ground-coupling analysis as part of the Volume 2, Section 3 reference results. This serves to widen the range of reference results (and acceptable outputs from HERS tools) for the basement cases. Case descriptions for more detailed ground-coupling analysis are given in Appendix G, where Cases L322B and L324B, are the more detailed versions of cases L322A and L324A, respectively.

For this series, Case L322A is the base case for Case L324A.

Output Requirements:

Annual or seasonal heating loads for Colorado Springs, Colorado are the only required outputs for these cases.

2.3.12.1 Case L322A: Uninsulated ASHRAE Conditioned Basement

Because this case contains numerous changes to the base building (Case L100A), a "recommended input procedure" is also included in this section.

Case L322A is **exactly as Case L100A except** that a conditioned basement has been added with the following envelope and interior floor modifications:

- Add basement walls
- Add concrete basement floor slab
- Replace the previous main floor (formerly above vented crawl space) with an interior main floor/basement ceiling.

The following figures and table (included after the discussion) contain information that is expected to be useful to most users:

- Figure 2-22. Basement Series Base Building, Section and Plan
- Figure 2-23. Basement Wall and Floor Section - Case L322A
- Figure 2-18. Floor Above Vented Crawl Space - Case L200A (with change per recommended input procedure, Step 4, below)
- Table 2-41. Building Thermal Summary - Case L322A.

Relevant supplementary tables that include more detailed information are listed below. Because these tables contain only new information relevant to the basement construction, they are not highlighted with bold font.

- Table 2-42. Basement Component Surface Areas - Case L322A
- Table 2-43. Material Descriptions, Basement Wall - Case L322A
- Table 2-44. Material Descriptions, Basement Floor - Case L322A
- Table 2-45. Material Descriptions, Interior Main Floor/Basement Ceiling - Case L322A.

Thermostat control and related modeling notes:

Basement air temperature is regulated by the same thermostat as the main floor (see Case L100A), and main floor and basement air are assumed to be well mixed. Therefore, you may model the entire house (main floor and basement) as a single zone, or you may model the main floor and basement as separate zones adjacent to each other with identical thermostat control. In a single-zone model, the main floor/basement ceiling is treated like the main floor interior walls. In a two-zone model, the main floor/basement ceiling is a partition between the main floor and the basement zones.

Recommended Input Procedure:

To develop the input deck for Case L322A, begin with Case L100A and proceed as follows:

1. Add the basement with 1539 ft^2 of floor area and 12312 ft^3 of air volume directly below the original conditioned zone as shown in Figure 2-22. The basement wall (effective ceiling) height is 8' as shown in Figures 2-22 and 2-23. Basement envelope and ceiling component surface areas are shown in Table 2-41 (relevant supplemental data is included in Table 2-42). Thermostat control is as described above. No additional infiltration through the basement envelope is assumed (i.e., the sill is caulked - Latta and Boileau, 1969). No additional internal gains are present in the basement.

2. Construct the basement walls as shown in Figure 2-23 and Table 2-41 (relevant supplementary tables are Table 2-42 and Table 2-43). The walls include a rim joist section, as well as above- and below-grade concrete wall sections. The basement wall construction is the same for all four basement walls. No windows are included in the basement.

3. Construct the basement floor as shown in Figures 2-22 and 2-23, and Table 2-41 (relevant supplemental tables are Tables 2-42 and 2-44).

4. Replace the base-case main floor (formerly above ventilated crawl space) with the interior main floor/basement ceiling of Table 2-41 (also see supplemental Table 2-45). This floor is based on that of Figure 2-18 (Case L200A) except the exterior film below the floor is replaced by an interior film.

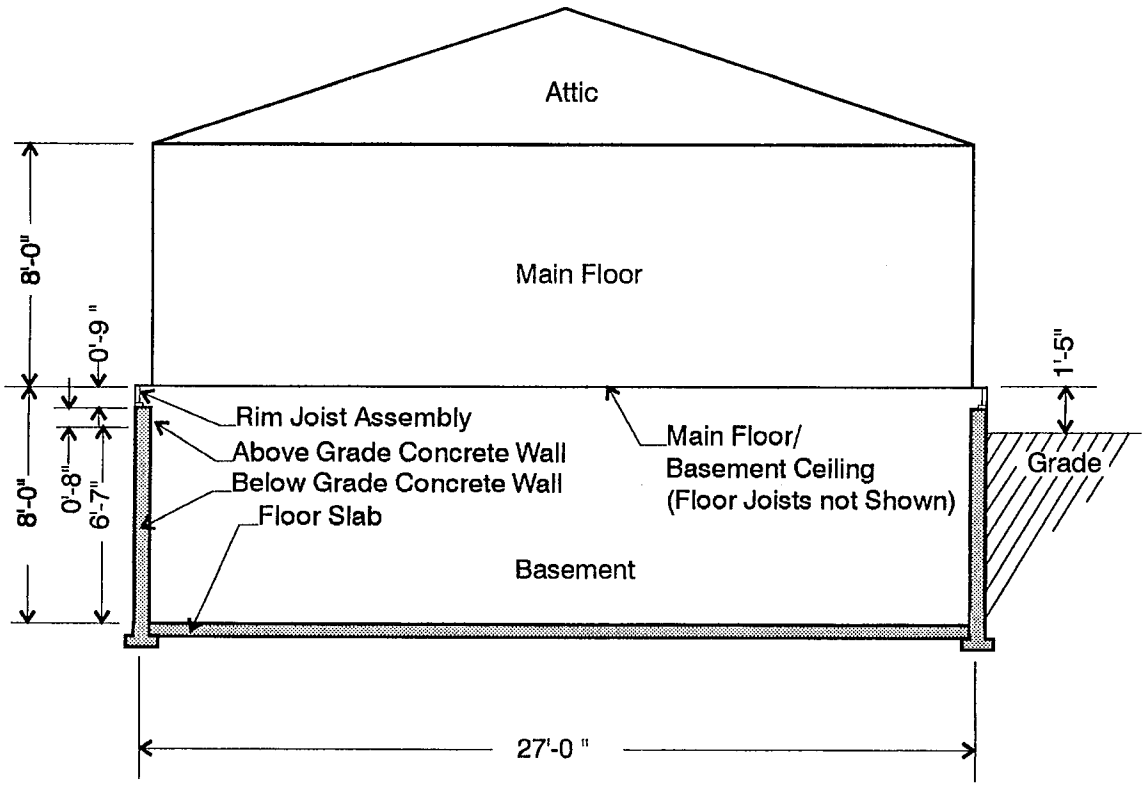

Section—Facing East

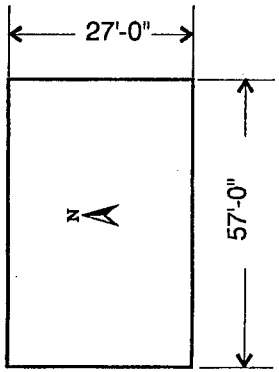

Basement Plan

Figure 2-22. Basement series base building, section and plan

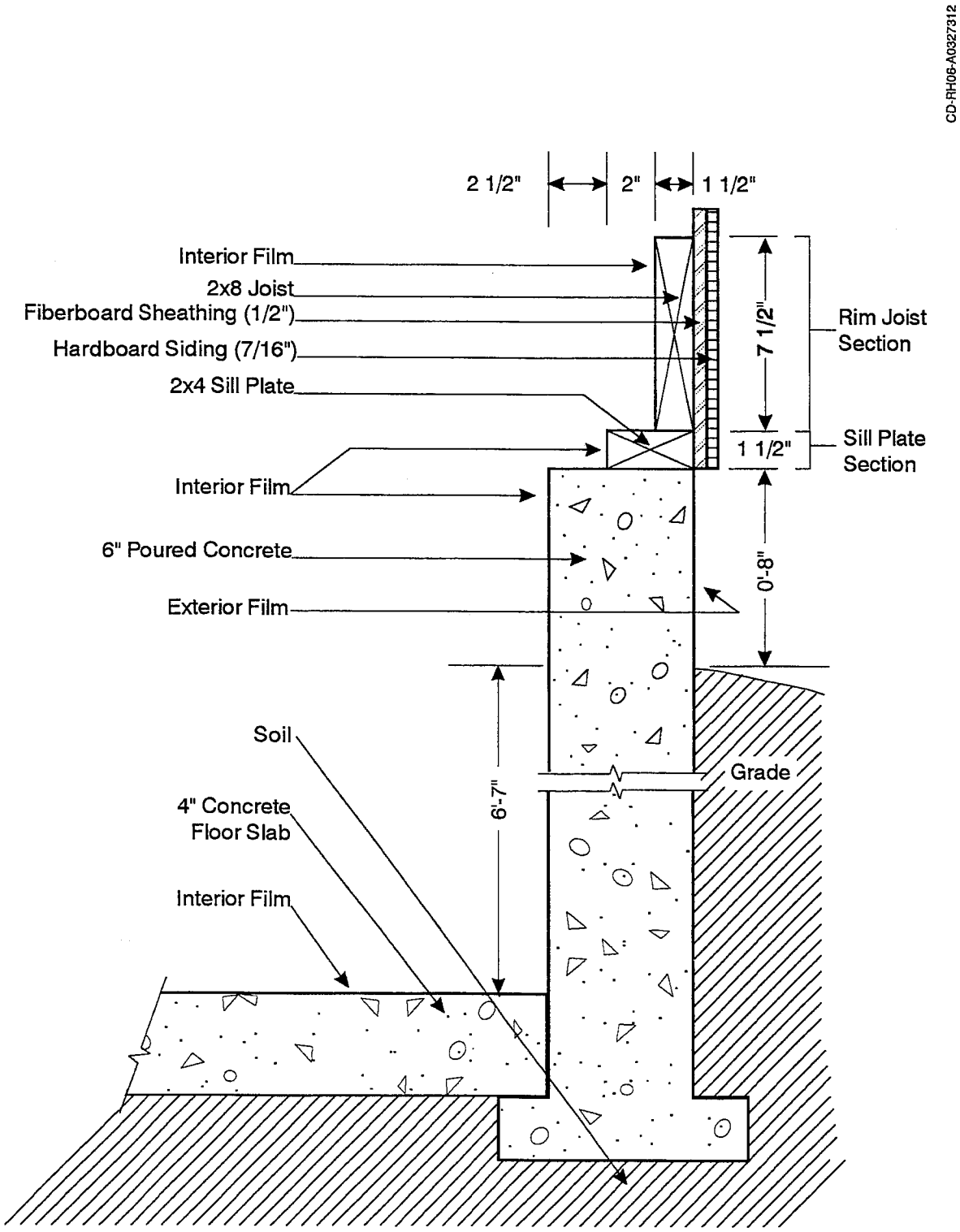

Figure 2-23. Basement wall and floor section—Case L322A

Table 2-41. Building Thermal Summary—Case L322A

ELEMENT (Note 1)	AREA ft^2	R $h*ft^2*F/Btu$	U $Btu/(h*ft^2*F)$	UA Btu/(h*F)	HEATCAP Btu/F (Note 2)
Exterior Walls (Note 3)	1034	11.76	0.085	87.9	1383
North Windows	90	0.96	1.039	93.5	
East Windows	45	0.96	1.039	46.7	
West Windows	45	0.96	1.039	46.7	
South Windows	90	0.96	1.039	93.5	
Doors	40	3.04	0.329	13.2	62
Ceiling/Attic/Roof (Note 4)	1539	20.48	0.049	75.1	1665
Infiltration **(Note 5)**					
Colorado Springs, CO				118.2	
Interior Walls	1024				1425
Basement (Note 6)					
Rim Joist	**126**	**5.01**	**0.200**	**25.1**	**284**
Above Grade Conc. Wall	**112**	**1.34**	**0.747**	**83.7**	**1568**
Below Grade Conc. Wall	**1106**	**5.87**	**0.170**	**188.4**	**(Note 7)**
Basement Floor	**1539**	**41.38**	**0.024**	**37.2**	**(Note 7)**
Main Floor/Bsmnt Ceiling	**1539**				**1930**
TOTAL BUILDING					**8317**
Excluding Infiltration				**791.1**	
Including Infiltration (Colorado Springs, CO)				**909.2**	

Note 1: Changes to Case L100A are highlighted by bold font. R- and U- values include surface coefficients.

Note 2: Heat capacity includes building mass within the thermal envelope (e.g., insulation and insulation thickness of structural framing are included, exterior siding and roof/attic mass are excluded).

Note 3: Excludes the area of windows and doors. ASHRAE framed area fraction of 0.25 is assumed for 2x4 16" O.C. construction.

Note 4: ASHRAE roof/ceiling framing area fraction of 0.1 applied to ceiling.

Note 5: Main floor infiltration is as in Case L100A. The basement zone has no infiltration. If you are modeling the basement and main floor as one combined zone, then use an infiltration rate of 0.335 ACH applied to the entire conditioned zone air volume of 24624 ft^3; also see Appendix B for more detail.

Note 6: Basement components are defined in Figures 2-22 and 2-23.

Note 7: For the ASHRAE below-grade wall and basement floor steady-state heat loss models, the effects of thermal mass are incorporated into the steady-state heat loss coefficients.

hspec4.wk3, r:a540..g575 19-Sep-95

2.3.12.1.1 Case L322A: Supplementary Tables

The following data were used for generating reference results. The previous figures and tables summarized, and are based on, the data presented in this section. We expect that many HERS tools will not be able to directly input much of the data in this section (e.g., material densities, specific heats, interior solar fractions, surface coefficients, etc.). However, if your models are capable of receiving this level of detail, then you must use these tables where possible.

Table 2-42. Basement Component Surface Areas—Case L322A

ELEMENT	HEIGHT or LENGTH ft	WIDTH ft	MULTIPLIER	AREA ft^2
MAIN FLOOR/BASEMENT CEILING				
Unframed Main Floor/Basement Ceiling (Note 1)				1385.1
Framed Main Floor/Basement Ceiling (Note 1)				153.9
RIM JOIST - NORTH/SOUTH				
Gross Wall	0.75	57.0	1.0	42.8
Joist Section (Note 2)	0.625	57.0	1.0	35.6
Sill Plate Sect. (Note 2)	0.125	57.0	1.0	7.1
RIM JOIST - EAST/WEST				
Gross Wall	0.75	27.0	1.0	20.3
Joist Section (Note 2)	0.625	27.0	1.0	16.9
Sill Plate Sect. (Note 2)	0.125	27.0	1.0	3.4
ABOVE-GRADE CONCRETE WALL - NORTH/SOUTH				
Gross Wall	0.667	57.0	1.0	38.0
ABOVE-GRADE CONCRETE WALL - EAST/WEST				
Gross Wall	0.667	27.0	1.0	18.0
BELOW-GRADE CONCRETE WALL				
Gross Wall (Note 3)	6.583	168.0	1.0	1106.0
BASEMENT FLOOR				
Concrete Slab	57.0	27.0	1.0	1539.0

Note 1: Framed floor areas are assumed to be 10% of gross areas for 2x8 16" O.C. framing. Only one side of the floor is considered for listed area. The interior floor sections are as in Figure 2-18 (Case L200A) except the exterior film coefficient is replaced by an interior film coefficient. Solar fractions for the side of this partition that serves as the main floor remain as in Case L100A. The main floor/basement ceiling has been included for the purpose of modeling the effect of its mass; it is not intended to divide the house into separately controlled zones.

Note 2: Rim joist and sill plate sections are defined in Figure 2-23.

Note 3: Width is the total perimeter length of the exterior walls.

hspec4.wk3, j:a277..g311 21-Jul-95

Table 2-43. Material Descriptions, Basement Wall—Case L322A

BASEMENT WALL (inside to outside) ELEMENT	Thickness in	R h*ft²*F/ Btu	U Btu/ h*ft²*F	k Btu/ h*ft*F	DENSITY lb/ft³	Cp Btu/lb*F
RIM JOIST ASSEMBLY						
Int Surf Coef		0.685	1.460			
Rim Joist 2x8 (Note 1)	1.5	1.874	0.534	0.0667	32.0	0.33
Sill Plate 2x4 (Note 2)	3.5	4.373	0.229	0.0667	32.0	0.33
Fiberboard sheathing	0.5	1.320	0.758	0.0316	18.0	0.31
Hardboard Siding, 7/16"	0.44	0.670	1.492	0.0544	40.0	0.28
Ext Surf Coef		0.174	5.748			
Total air - air, rim joist section		4.723	0.212			
Total air - air, sill plate section		7.222	0.138			
Total air - air, composite section (see Note 3)		5.012	0.200			
Total surf - surf, rim joist section		3.864	0.259			
Total surf - surf, sill plate section		6.363	0.157			
Total surf - surf, composite section (see Note 4)		4.153	0.241			
ABOVE-GRADE CONCRETE WALL						
Int Surf Coef		0.685	1.460			
Poured concrete	6.0	0.480	2.083	1.0417	140.0	0.20
Ext Surf Coef		0.174	5.748			
Total air - air		1.339	0.747			
BELOW-GRADE CONCRETE WALL						
Int Surf Coef		0.685	1.460			
Wall and Soil (Note 5)		5.186	0.193			
Total air - air		5.871	0.170			

Note 1: Rim joist section only. See Figure 2-23 for section view.

Note 2: Sill plate section only. See Figure 2-23 for section view.

Note 3: Total composite R-values based on 7.5" rim joist section and 1.5" sill plate section.

Note 4: Total surf-surf composite R-value is the total air-air composite R-value less the resistances caused by the film coefficients.

Note 5: This R-value is total air-air R-value (based on the ASHRAE overall steady-state heat transfer coefficient for a 6'-7" deep below-grade concrete wall) less the resistance of the listed interior film coefficient.

hspec4.wk3 q:a1..g40 21-Jul-95

Table 2-44. Material Descriptions, Basement Floor—Case L322A

BASEMENT FLOOR, SLAB ON GRADE ELEMENT (inside to outside)	R h*ft²*F/ Btu	U Btu/ h*ft²*F
Int Surf Coef (Note 1)	0.765	1.307
Below-Grade Slab and Soil (Note 2)	40.614	0.025
Total air-air	41.379	0.024

Note 1: Average of ASHRAE heating and cooling coefficients.

Note 2: This R-value is the total air-air R-value (based on the ASHRAE overall steady-state heat transfer coefficient for a 6'-7" deep below-grade concrete floor slab) less the resistance of the listed interior film coefficient.

Table 2-45. Material Descriptions, Interior Main Floor/Basement Ceiling—Case L322A

INTERIOR MAIN FLOOR/BASEMENT CEILING (inside to outside) ELEMENT	Thickness in	R h*ft²*F/ Btu	U Btu/ h*ft²*F	k Btu/ h*ft*F	DENSITY lb/ft³	Cp Btu/lb*F
Int Surf Coef (Note 1)		0.765	1.307			
Carpet w/ fibrous pad (Note 2)		2.080	0.481			
Plywood 3/4"	0.75	0.937	1.067	0.0667	34.0	0.29
Joists 2x8 16" O.C. (Note 3)	7.25	9.058	0.110	0.0667	32.0	0.33
Int Surf Coef (Note 1)		0.765	1.307			

Note 1: Average of ASHRAE heating and cooling coefficients.

Note 2: There is not enough information available for dynamic modeling of carpet.

Note 3: Framed section only, use Figure 2-18 (Case L200A) floor section view; the exterior film is replaced by an interior film. Use framed area fraction of 0.1.

hspec4.wk3 q:a50..g84 21-Jul-95

2.3.12.2 Case L324A: Interior Insulation Applied to Uninsulated ASHRAE Conditioned Basement Wall

This case is **exactly as Case L322A except** that insulation has been added to the interior side of the basement wall and rim joist. The basement floor slab remains as is in Case L322A.

The following figures and table highlight information that will be useful to most users:

- Figure 2-24. Insulated Basement Wall and Rim Joist Section - Case L324A
- Figure 2-25. Insulated Basement Wall Plan Section - Case L324A
- Table 2-46. Building Thermal Summary - Case L324A.

Relevant supplementary tables that include more detailed information are:

- Table 2-47. Component Surface Areas - Case L324A
- Table 2-48. Material Descriptions, Basement Wall - Case L324A.

Bold font in figures and tables for Case L324A highlight changes relative to Case L322A.

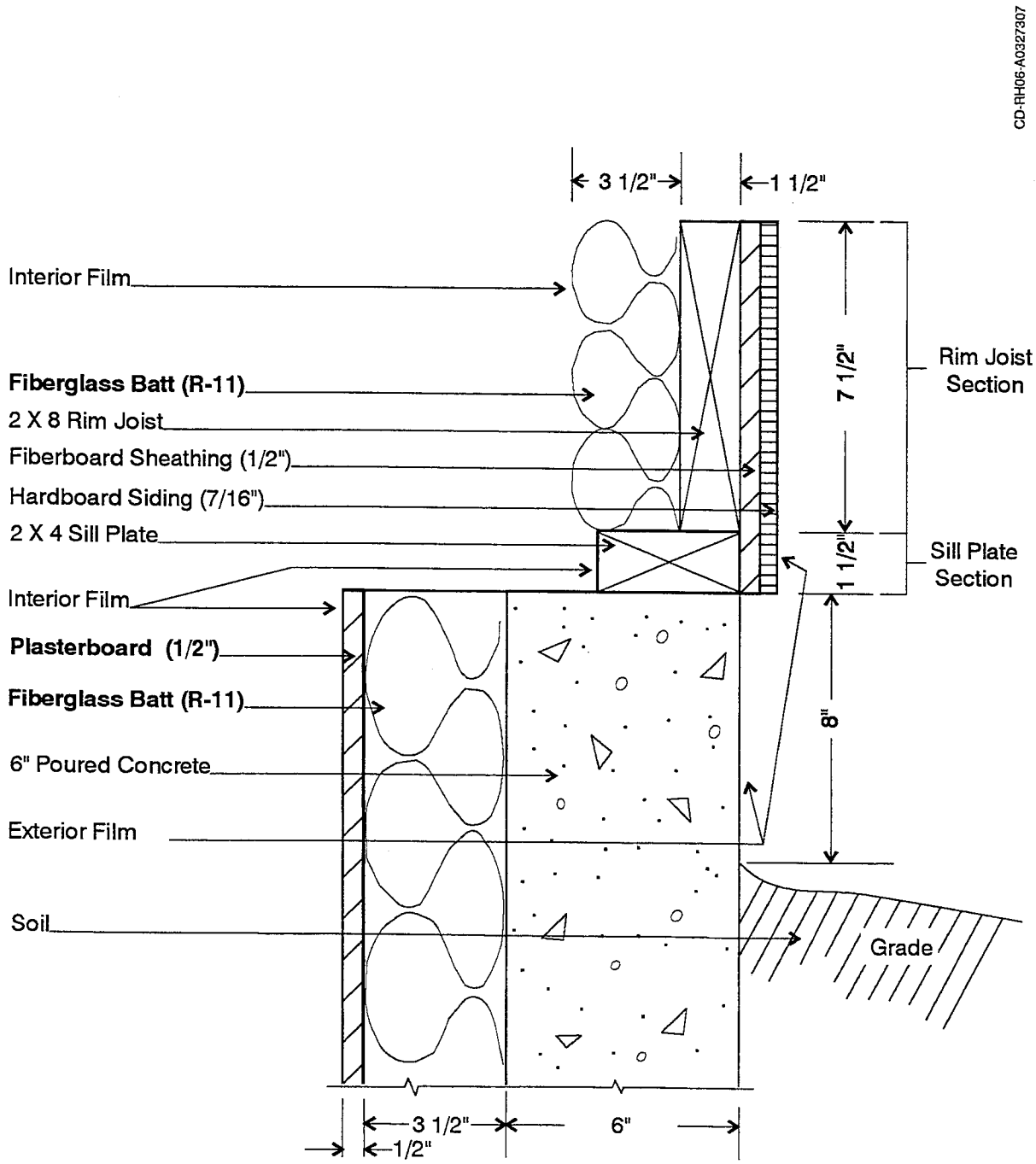

Notes: (1) Changes to Case L322A are highlighted with bold font. (2) Detail showing floor joist attachment to sill plate and its effect on rim joist insulation is ignored for the purpose of this test. Use the above rim joist section for all walls regardless of orientation.

Figure 2-24. Insulated basement wall and rim joist section—Case L324A

CD-RH06-A0327306

Plan Section

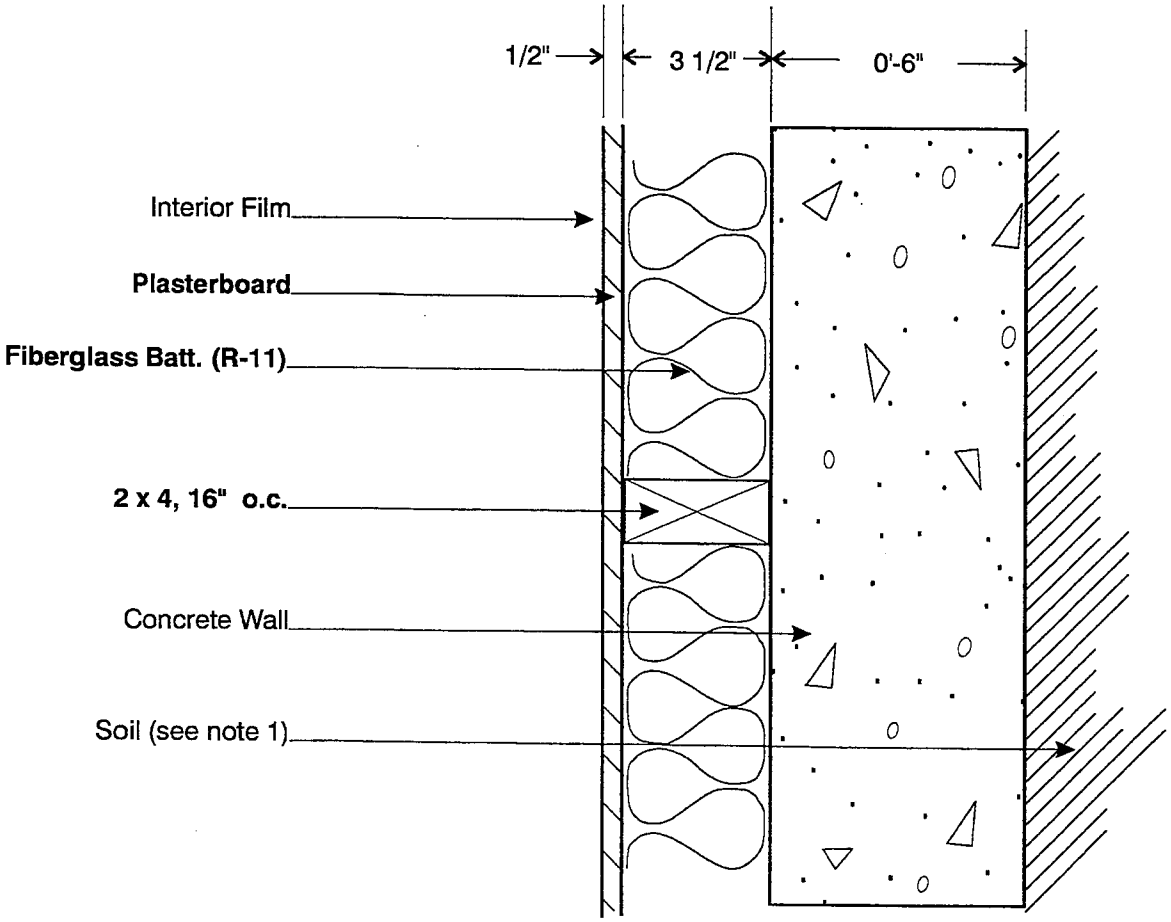

Notes: (1) Changes to Case L322A are highlighted with bold font. (2) Soil does not apply to above-grade portion of basement wall. Effective soil layer thickness varies with wall depth below grade.

Figure 2-25. Insulated basement wall plan section—Case L324A

Table 2-46. Building Thermal Summary—Case L324A

ELEMENT (Note 1)	AREA ft^2	R $h*ft^2*F/Btu$	U $Btu/(h*ft^2*F)$	UA Btu/(h*F)	HEATCAP Btu/F (Note 2)	
Exterior Walls (Note 3)	1034	11.76	0.085	87.9	1383	
North Windows	90	0.96	1.039	93.5		
East Windows	45	0.96	1.039	46.7		
West Windows	45	0.96	1.039	46.7		
South Windows	90	0.96	1.039	93.5		
Doors	40	3.04	0.329	13.2	62	
Ceiling/Attic/Roof (Note 4)	1539	20.48	0.049	75.1	1665	
Infiltration						
Colorado Springs, CO				118.2		
Interior Walls	1024				1425	
Basement (Note 5)						
Rim Joist	126	**13.14**	**0.076**	**9.6**	**68**	
Above-Grade Conc. Wall	112	**10.69**	**0.094**	**10.5**	**99**	**(Note 6)**
Below-Grade Conc. Wall	1106	**16.31**	**0.061**	**67.8**	**975**	**(Notes 6,7)**
Basement Floor	1539	41.38	0.024	37.2	(Note 8)	
Main Floor/Bsmnt Ceiling	1539				1930	
TOTAL BUILDING					**7607**	
Excluding Infiltration				**581.8**		
Including Infiltration (Colorado Springs, CO)				**700.0**		

Note 1: Changes to Case L322A are highlighted by bold font. R- and U- values include surface coefficients.

Note 2: Heat capacity includes building mass within the thermal envelope (e.g., insulation and insulation thickness of structural framing are included, exterior siding and roof/attic mass are excluded).

Note 3: Excludes the area of windows and doors. ASHRAE framed area fraction of 0.25 is assumed for 2x4 16" O.C. construction.

Note 4: ASHRAE roof/ceiling framing area fraction of 0.1 applied to ceiling.

Note 5: Basement components are defined in Figure 2-24.

Note 6: Framed area fraction of 0.1 used for insulated basement wall.

Note 7: HEATCAP for below-grade basement wall includes only thermal mass associated with plasterboard, framing, and insulation.

Note 8: For the ASHRAE below-grade wall and basement floor steady-state heat loss models, the effects of thermal mass are incorporated into the steady-state heat loss coefficients.

hspec4.wk3, r:a635..g670 19-Sep-95

Table 2-47. Component Surface Areas—Case L324A

ELEMENT (Note 1)	HEIGHT or LENGTH ft	WIDTH ft	MULTIPLIER	AREA ft^2
ABOVE-GRADE CONCRETE WALL - NORTH/SOUTH				
Gross Wall	0.667	57.0	1.0	38.0
Insulated Wall (Note 2)				**34.2**
Framed Wall (Note 2)				**3.8**
ABOVE-GRADE CONCRETE WALL - EAST/WEST				
Gross Wall	0.667	27.0	1.0	18.0
Insulated Wall (Note 2)				**16.2**
Framed Wall (Note 2)				**1.8**
BELOW-GRADE CONCRETE WALL				
Gross Wall (Note 3)	6.58	168.0	1.0	1106.0
Insulated Wall (Note 2)				**995.4**
Framed Wall (Note 2)				**110.6**

Note 1: Changes to Case L322A are highlighted with bold font.

Note 2: 10% framed area fraction is assumed for non-structural wall framing.

Note 3: Width is the total perimeter length of the exterior walls.

hspec4.wk3, j:a319..g341 19-Sep-95

Table 2-48. Material Descriptions, Basement Wall—Case L324A

INSULATED BASEMENT WALL (inside to outside) (Note 1) ELEMENT	Thickness in	R h*ft²*F/ Btu	U Btu/ h*ft²*F	k Btu/ h*ft*F	DENSITY lb/ft³	Cp Btu/lb*F
RIM JOIST ASSEMBLY						
Int Surf Coef		0.685	1.460			
Rim Joist 2x8 (Note 2)	1.5	1.874	0.534	0.0667	32.0	0.33
Fiberglass batt (Note 2)	**3.5**	**11.000**	**0.091**	**0.0265**	**0.6**	**0.20**
Sill Plate 2x4 (Note 3)	3.5	4.373	0.229	0.0667	32.0	0.33
Fiberboard sheathing	0.5	1.320	0.758	0.0316	18.0	0.31
Hardboard Siding, 7/16"	0.44	0.670	1.492	0.0544	40.0	0.28
Ext Surf Coef		0.174	5.748			
Total air - air, rim joist section		**15.723**	**0.064**			
Total air - air, sill plate section		**7.222**	**0.138**			
Total air - air, composite section (see Note 4)		**13.144**	**0.076**			
Total surf - surf, rim joist section		**14.864**	**0.067**			
Total surf - surf, sill plate section		**6.363**	**0.157**			
Total surf - surf, composite section (see Note 5)		**12.285**	**0.081**			
ABOVE-GRADE CONCRETE WALL						
Int Surf Coef		0.685	1.460			
Plasterboard	**0.5**	**0.450**	**2.222**	**0.0926**	**50.0**	**0.26**
Fiberglass batt (Note 6)	**3.5**	**11.000**	**0.091**	**0.0265**	**0.6**	**0.20**
Frame 2x4, 16" O.C. (Note 7)	**3.5**	**4.373**	**0.229**	**0.0667**	**32.0**	**0.33**
Poured concrete	6.0	0.480	2.083	1.0417	140.0	0.20
Ext Surf Coef		0.174	5.748			
Total air - air, insulated section		**12.789**	**0.078**			
Total air - air, frame section		**6.162**	**0.162**			
Total air - air, composite section (see Note 8)		**11.547**	**0.087**			
Total surf - surf, insulated section		**11.930**	**0.084**			
Total surf - surf, frame section		**5.303**	**0.189**			
Total surf - surf, composite section (see Note 5)		**10.688**	**0.094**			
BELOW-GRADE CONCRETE WALL						
Int Surf Coef (ASHRAE)		0.685	1.460			
Plasterboard	**0.5**	**0.450**	**2.222**	**0.0926**	**50.0**	**0.26**
Fiberglass batt (Note 6)	**3.5**	**11.000**	**0.091**	**0.0265**	**0.6**	**0.20**
Frame 2x4, 16" O.C. (Note 7)	**3.5**	**4.373**	**0.229**	**0.0667**	**32.0**	**0.33**
Wall and Soil (Note 9)		5.186	0.193			
Total air - air, insulated section		**17.321**	**0.058**			
Total air - air, frame section		**10.694**	**0.094**			
Total air - air, composite section (see Note 8)		**16.311**	**0.061**			

Note 1: Changes to Case L322A are highlighted with bold font.
Note 2: Rim joist section only, see Figure 2-24 for section view of rim joist.
Note 3: Sill plate section only.
Note 4: Total composite R-values based on 7.5" rim joist section and 1.5" sill plate section.
Note 5: Total surf-surf composite R-value is the total air-air composite R-value less the resistances caused by the film coefficients.
Note 6: Insulated section only.
Note 7: Framed section only.
Note 8: Total composite R-values from 90% insulated area section 10% frame area section for nonstructural framing.
Note 9: This R-value is total air-air R-value from Case L322A (based on the ASHRAE overall steady-state heat transfer coefficient for a 6'-7" deep below-grade concrete wall) less the resistance of the listed interior film coefficient.

hspec4.wk3 q:a155..g215 21-Jul-95

2.4 Tier 2 Test Cases

This section describes revisions to the base building required to model the Tier 2 cases of HERS BESTEST case by case. Recall from Table 1-3 that only the annual cooling output for Case L165A is generated using the Las Vegas, Nevada weather data. Annual heating output for Case L165A and all outputs (annual heating and cooling) for the P-series cases are generated using the Colorado Springs, Colorado, weather data.

Case L165A is based on Tier 1 Case L160A, and Case P100A is based on Tier 1 Case L120A. Case P100A represents the base case for the other P-series cases (P105A, P110A, P140A, P150A). Bold font in tables and figures for the Tier 2 cases denotes changes to their appropriate base cases.

Where applicable, summary figures and tables are listed first with supplementary tables listed afterward.

2.4.1 Case L165A: East/West Shaded Windows

Case L165A is **exactly as Case L160A except** that an opaque overhang and ten opaque fins have been added to the east and west walls as shown in Figure 2-26.

Depending on the input capabilities of your software, it may not be possible to model the exact geometry of the windows and shading devices as shown in Figure 2-26. If this is the case, a nearly equivalent model of the shading devices may be used such as that described in Figure 2-27, where the ten small fins have been replaced with two large fins. It may also be necessary to modify the window geometry. This type of modification process was presented with Figure 2-14 (Case L155A).

Recall from Section 1 that this test requires that you use the most detailed level of modeling your tool will allow.

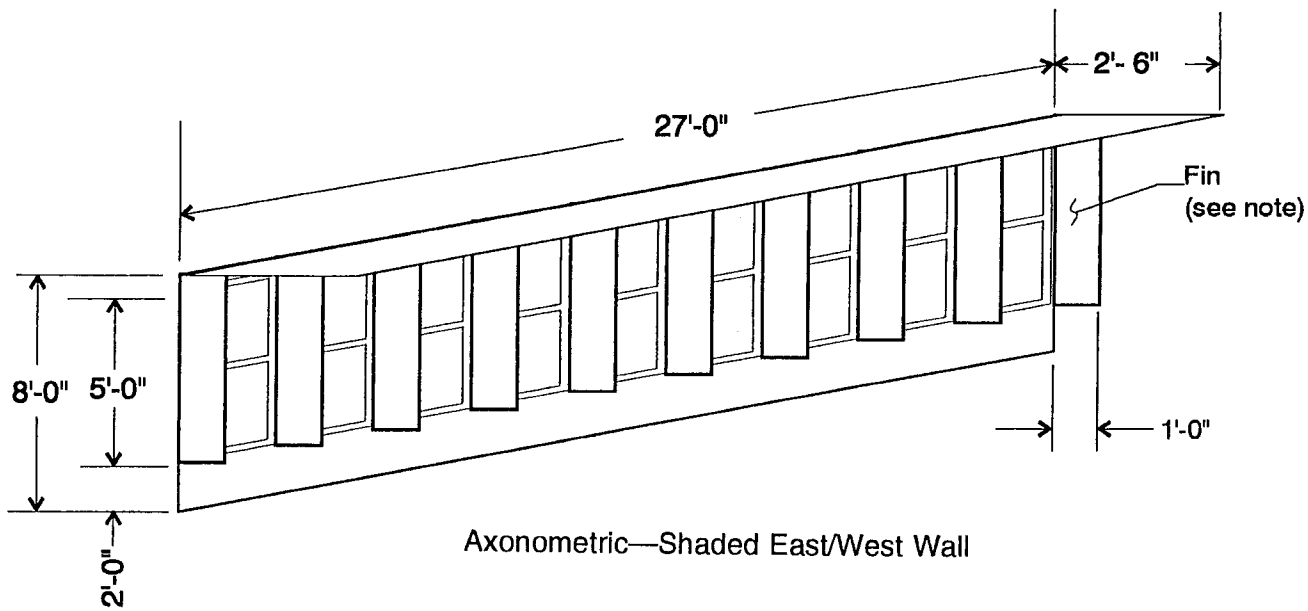

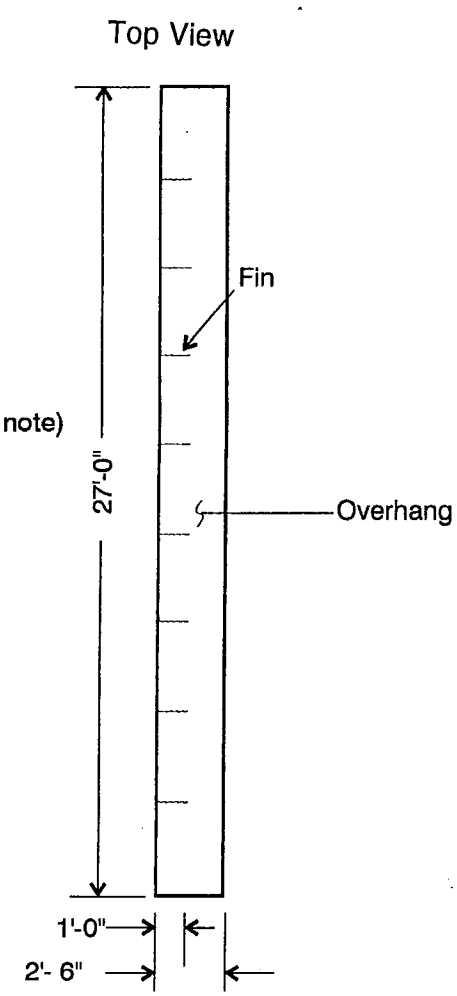

Note: Typical fin is 1′ wide and 6′ high. Plane of fin is perpendicular to plane of wall.

CD-RH06-A0327335

Figure 2-26. Overhang and fins for east and west windows—Case L165A

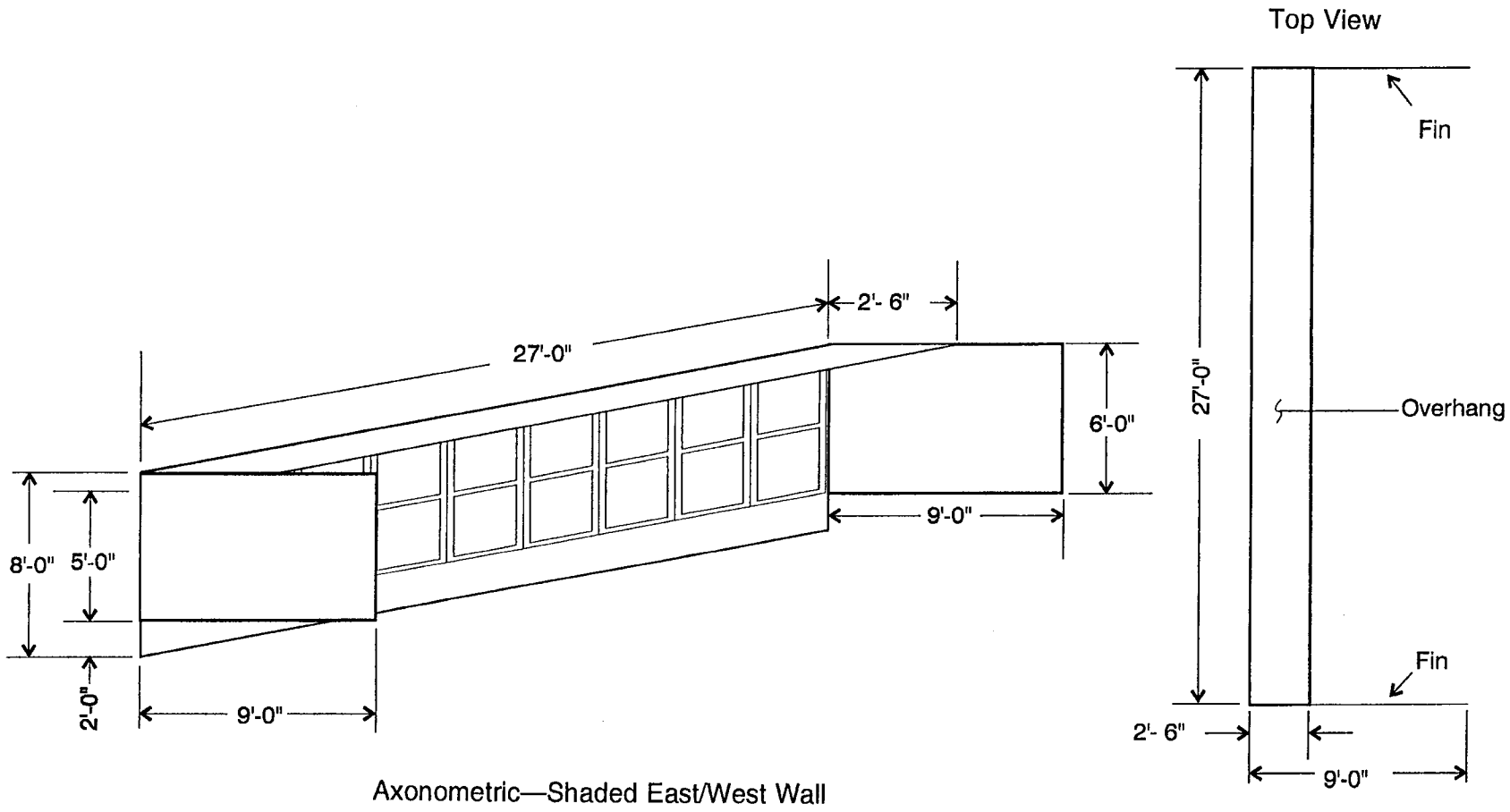

Figure 2-27. Overhang and fins for east and west windows alternate arrangement—Case L165A.

CD-RH06-A0327334

2.4.2 Case P100A: Passive Solar Base Case

Case P100A is the base case for the passive solar series (P-series) cases. This case is representative of good passive solar heating design. However, for the passive base case, a south wall overhang was not included. To prevent summer overheating, good passive-solar design would include an overhang as described in Case P105A. Additionally, an optimized passive solar design would include more glass area (replacing some of the window frame) with a corresponding increase to the mass surface area.

Case P100A is **based on Case L120A** with modifications as described below. Because of the many changes in this case versus Case L120A, we recommend that you double check your inputs before running the remainder of the P-serious cases. A "recommended input procedure" is also included.

In general, the following envelope and interior wall **modifications to Case L120A** were applied to achieve Case P100A:

- All south window orientation with increased glass area
- Clear double-pane window with wood frame and modified geometry
- R-23 composite floor with brick pavers for thermal mass
- Replacement of three of the 14' lightweight interior walls with three 14' double brick walls for thermal mass.

The following tables and figures highlight information that is expected to be useful to most users.

- Figure 2-9. Exterior Wall Section - Case L120A
- Figure 2-28. Window, Door, and Mass Wall Locations - Case P100A
- Figure 2-29. Mass Floor Above Vented Crawl Space, Section - Case P100A
- Figure 2-30. Interior Mass Wall Section - Case P100A
- Figure 2-31. Window Detail, Vertical Slider 30" Wide by 78" High with 2 3/4" Frame - Case P100A
- Table 2-49. Building Thermal Summary - Case P100A.

Relevant supplementary tables that include more detailed information (presented after the above summary tables) are:

- Table 2-18. Material Descriptions, Exterior Wall - Case L120A
- Table 2-50. Component Surface Areas and Solar Fractions - Case P100A
- Table 2-51. Material Descriptions, Floor Over Vented Crawl Space - Case P100A
- Table 2-52. Material Descriptions, Interior Mass Wall - Case P100A
- Table 2-53. Gross Window Summary, Double Pane, Clear, Wood Frame Window - Case P100A
- Table 2-54. Glazing Summary Clear Double Pane Center of Glass Values - Case P100A
- Table 2-55. Optical Properties as a Function of Incidence Angle for Clear Double-Pane Glazing - Case P100A.

Where appropriate, changes to Case L120A have been highlighted in tables and figures with bold font.

Radiative Properties of Massive Surfaces:

For massive (brick) surfaces, solar absorptance and infrared omittance are 0.6 and 0.9 respectively (same as other surfaces).

Thermostat Control Strategies:

For the P-series cases, Colorado Springs, Colorado weather data are also used to generate annual (or seasonal) cooling loads and the annual (or seasonal) heating loads. Use the annual thermostat control settings noted below for the P-series cases.

Heating only:
HEAT = ON IF TEMP < 68°F; COOL = OFF.
Cooling only:
COOL = ON IF TEMP > 78°F; HEAT = OFF.

Because this is not deadband thermostat control, separate simulations for heating and cooling outputs were required to generate reference results (just as with the Tier 1 cases when Las Vegas was the cooling climate). Proper comparison with reference results requires separate simulations with your HERS tool/software for generating annual (or seasonal) heating and cooling outputs.

Interior Walls:

As in the Tier 1 tests, interior walls (including massive interior walls) have been included for the purpose of modeling their mass effect. They are not intended to divide the conditioned zone into separately controlled zones.

Vented Crawl Space:

As in the Tier 1 tests, no attempt was made to describe the vented crawl space as a separate zone, and vented crawl space temperature is assumed to equal outdoor air temperature.

Interior Solar Distribution:

Interior solar distribution is calculated as shown in Appendix F. This represents a more detailed treatment appropriate to passive-solar design.

Recommended Input Procedure:

To develop the input deck for Case P100A, **begin with Case L120A** and proceed as follows.

1. Remove all window assemblies from the north, east, and west walls and replace them with the Case L120A solid exterior wall material described in Figure 2-9 and Table 2-18 (Case L120A). Resulting component surface areas and solar fractions are shown in Table 2-50.

2. Move the door from the south wall to the east wall as shown in Figure 2-28. Material properties of doors are unchanged. Resulting component surface areas and solar fractions are shown in Table 2-50.

3. Construct the south wall as shown in Figure 2-28 and Table 2-50. Note that all windows are located on the south wall and that the gross window area (including frames) is 325 ft^2. While the window remains as clear double-pane with wood frame, the window unit size was modified so that more glazing could be applied to the south wall. The resulting changes in overall (glass plus frame) window properties are described in Figure 2-31 and Table 2-49, and in greater detail in Tables 2-53 through 2-55. Because of the large amount of window area, the only place for batt insulation (see insulated wall section of Figure 2-9 and Table 2-18) is above the window headers, the remaining

portion of the south wall uses only the framed wall section from Figure 2-9 and Table 2-18. Resulting component surface areas and solar fractions are shown in Table 2-50.

4. Replace the L120A floor with the floor above vented crawl space described in Figure 2-29 and Table 2-51. For the purpose of this test the floor structure is assumed to be sufficient to support the brick pavers without modification. Resulting component surface areas and solar fractions are shown in Table 2-50.

5. Replace the three 14' low-mass interior with the double-brick walls as shown in Figure 2-28. The double-brick interior wall materials are described in Figure 2-30 and Table 2-52. All other lightweight interior walls remain as located in Figure 2-2 (Case L100A). Resulting component surface areas and solar fractions are shown in Table 2-50.

Output Requirements:

Recall from Table 1-3 that for the P-series cases, annual or seasonal cooling loads (as well as heating loads) must be generated using the Colorado Springs, Colorado, weather data. The cooling climate is changed for these cases because the passive solar design described in Cases P100A and P105A, while appropriate for Colorado Springs, Colorado, is inappropriate for Las Vegas, Nevada.

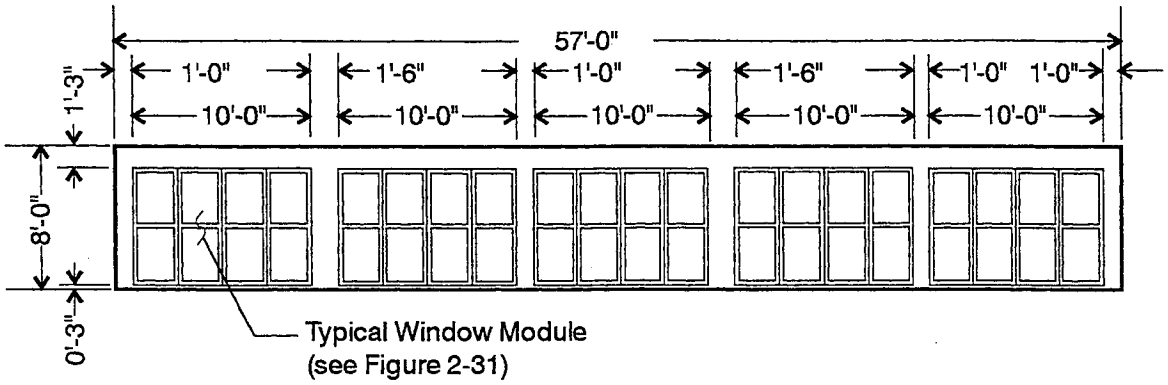

South Wall—Elevation

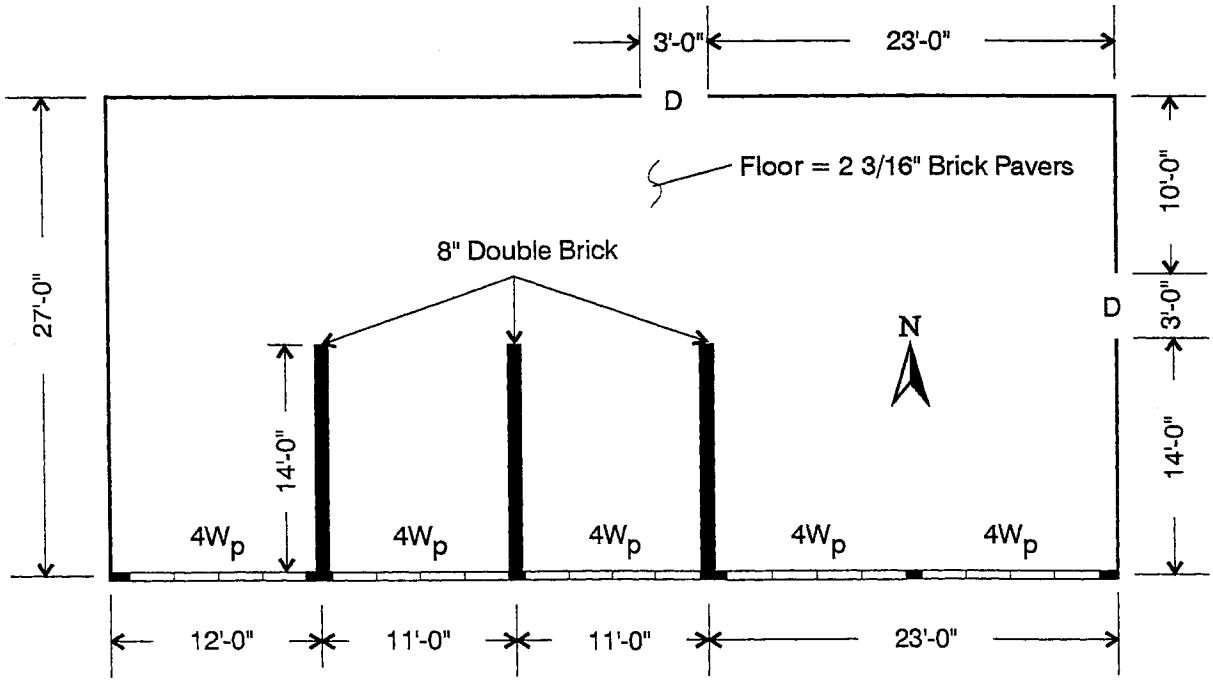

Plan

Legend:

#W:

W = window (2′6″ wide x 6′6″ high), see Figure 2-31

= number of windows along given length of exterior wall

D = Solid-core wood door (3′ wide x 6′8″ high)

CD-RH06-A0327326

Note: 8″ brick interior walls replace low-mass interior walls of Figure 2-2; all other interior walls of Figure 2-2 remain as is.

Figure 2-28. Window, door, and mass wall locations—Case P100A

Note: Changes to Case L120A are highlighted with bold font.

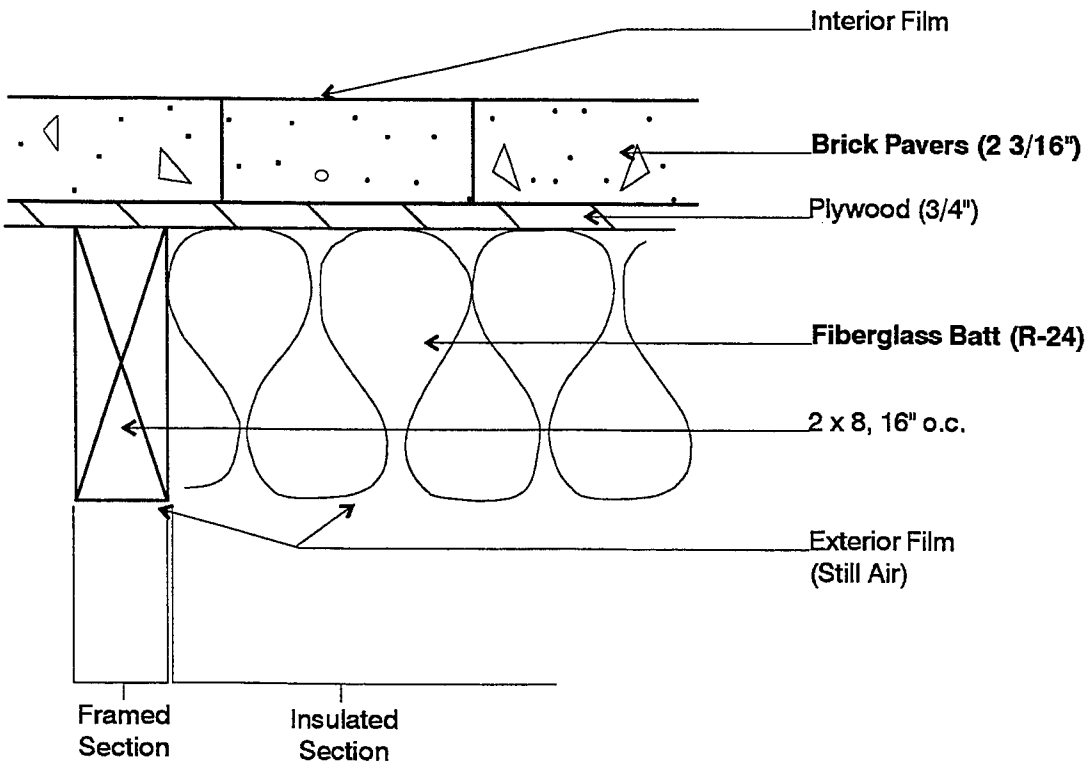

Figure 2-29. Mass floor above vented crawl space, section—Case P100A

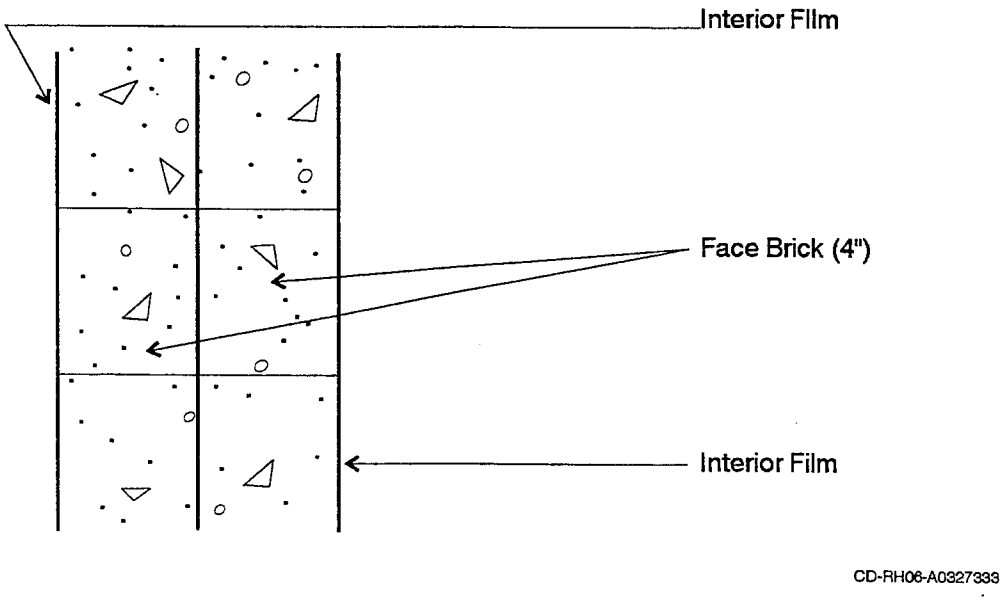

Figure 2-30. Interior mass wall section—Case P100A

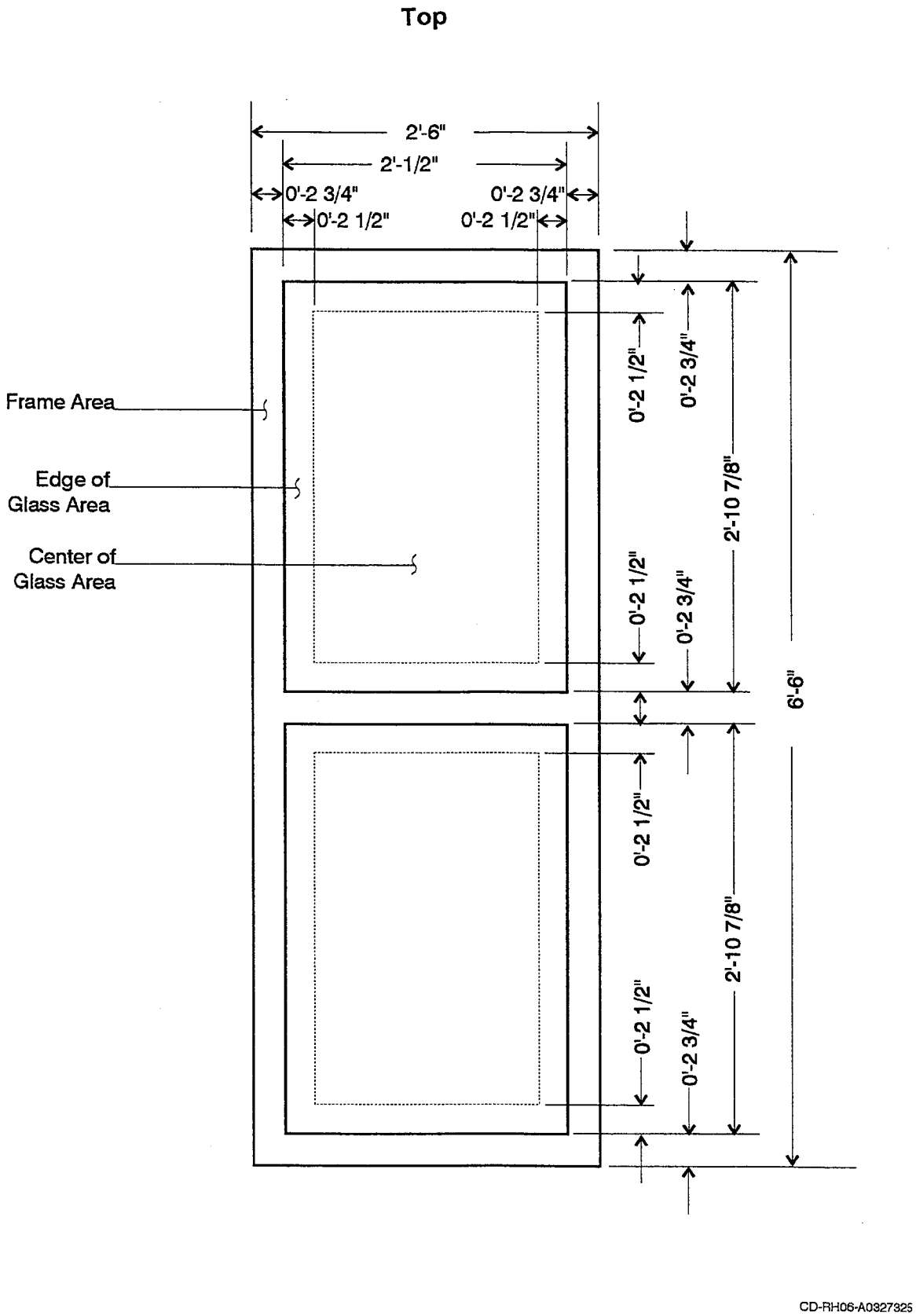

Figure 2-31. Window detail, vertical slider 30″ wide by 78″ high with 2¾″ frame—Case P100A

Table 2-49. Building Thermal Summary—Case P100A

ELEMENT (Note 1)	AREA ft2	R h*ft2*F/Btu (Note 2)	U Btu/(h*ft2*F) (Note 2)	UA Btu/(h*F) (Note 2)	HEATCAP Btu/F (Note 3)
N/E/W Ext Walls (Note 4)	**848**	23.58	0.042	**36.0**	**1435**
Doors	40	3.04	0.329	13.2	62
South Windows (Note 5)	**325**	**1.96**	**0.510**	**165.7**	
South Ext Insulated Wall	**50**	**27.18**	**0.037**	**1.8**	**32**
South Ext Framed Wall	**81**	**16.05**	**0.062**	**5.0**	**441**
Ceiling/Attic/Roof (Note 6)	1539	59.53	0.017	25.9	1850
Floor (Note 6)	1539	**23.35**	**0.043**	**65.9**	**11131**
Infiltration					
Colorado Springs, CO				118.2	
Interior Low Mass Walls	**688**				**957**
Interior High Mass Walls	**336**				**6989**
TOTAL BUILDING					**22896**
Excluding Infiltration				**313.5**	
Including Infiltration (Colorado Springs, CO)				**431.7**	

WINDOW SUMMARY: DOUBLE PANE, WOOD FRAME WITH METAL SPACER

(Note 7)	Area ft2	U Btu/(h*ft2*F) (Note 2)	SHGC (dir. nor.) (Note 8)	Trans. (dir. nor.) (Note 9)	SC (Note 10)
Glass pane	**11.87**	**0.516**	**0.760**	**0.705**	**0.887**
Wood frame w/ metal spacer	**4.38**	**0.492**			
Window composite air-air	**16.25**	**0.510**	**0.577**	**0.515**	**0.672**

PASSIVE SOLAR DESIGN SUMMARY **(Note 11)**

Net south glass area (ft^2)	S.GL.A/ Floor A	Heatcap/ S.GL.A Btu/($F*ft^2$)	Mass A/ S.GL.A	LCR **(Note 12)** Btu/(day*F*ft^2)
237	**0.154**	**96.5**	**7.90**	**31.3**

Note 1: Changes to Case L120A are highlighted by bold font.

Note 2: Includes interior and exterior surface coefficients.

Note 3: Heat capacity includes building mass within the thermal envelope (e.g. insulation and insulation thickness of structural framing are included, exterior siding and roof/attic mass are excluded).

Note 4: Excludes area of doors. ASHRAE framed area fraction of 0.22 used for 2x6 24" O.C. construction.

Note 5: Window area and other properties are for glass and frame combined. The accompanying window summary disaggregates glass and frame properties for a single window unit. The south wall contains 20 window units.

Note 6: ASHRAE roof/ceiling framing area fraction of 0.1 used for both ceiling and floor.

Note 7: This data summarizes one complete detailed window unit per Figure 2-31 and Tables 2-53 through 2-55.

Note 8: SHGC is the Solar Heat Gain Coefficient which includes the inward flowing fraction of absorbed direct normal solar radiation in addition to direct normal transmittance. For more detail, see ASHRAE 1993 Fundamentals, chp. 27.

Note 9: "Trans." is the direct normal transmittance.

Note 10: Shading coefficient (SC) is the ratio of direct normal SHGC for a specific glazing unit to direct normal SHGC for the WINDOW 4.1 reference glazing unit.

Note 11: This case is representative of good passive solar design. However, an optimized passive solar design would include more glass (less window frame) area than is given here, with a corresponding increase in the mass surface area, and an overhang per Case P105A.

Note 12: LCR is Load to Collector area Ratio, calculated from:
((Total building UA including infiltration) - (south glass UA))*(24 h/day)/(south glass area).

hspec4.wk3, r:a677..g727 09-Aug-95

2.4.2.1 Case P100A: Supplementary Tables

The following data were used for generating reference results. The previous figures and tables summarized, and are based on, the data presented in this section. We expect that many HERS tools will not be able to directly input much of the data in this section (e.g., material densities, specific heats, detailed window optical properties, interior solar fractions, surface coefficients, etc.). However, if your models are capable of receiving this level of detail, then you must use these tables where possible.

Table 2-50. Component Surface Areas of Solar Fractions—Case P100A

ELEMENT (Note 1)	HEIGHT or LENGTH ft	WIDTH ft	MULTIPLIER	AREA ft^2	INSIDE SOLAR FRACTION	
EXTERIOR SOUTH WALL					(Note 2)	
Gross Wall	8.0	57.0	1.0	456.0		
Gross Window	**6.5**	**2.5**	**20.0**	**325.0**		
Window Frame Only			**20.0**	**87.7**	**0.0065**	
Insulated L120A Wall	**(Note 3)**			**50.0**	**0.0037**	
Framed L120A Wall	**(Note 3)**			**81.0**	**0.0060**	
EXTERIOR NORTH WALL						
Gross Wall	8.0	57.0	1.0	456.0		
Door	6.67	3.0	1.0	20.0	**0.0015**	
Insulated L120A Wall	(Note 4)			**340.1**	**0.0251**	
Framed L120A Wall	(Note 4)			**95.9**	**0.0071**	
EXTERIOR EAST WALL						
Gross Wall	8.0	27.0	1.0	216.0		
Door	**6.67**	**3.0**	**1.0**	**20.0**	**0.0015**	
Insulated L120A Wall	(Note 4)			**152.9**	**0.0113**	
Framed L120A Wall	(Note 4)			**43.1**	**0.0032**	
EXTERIOR WEST WALL						
Gross Wall	8.0	27.0	1.0	216.0		
Insulated L120A Wall	(Note 4)			**168.5**	**0.0124**	
Framed L120A Wall	(Note 4)			**47.5**	**0.0035**	
CEILING						
Gross Ceiling	57.0	27.0	1.0	1539.0		
Insulated Ceiling	(Note 5)			1385.1	**0.1022**	
Framed Ceiling	(Note 5)			153.9	**0.0114**	
FLOOR						
Gross Floor	57.0	27.0	1.0	1539.0		
Insulated Floor	(Note 5)			1385.1	**0.2689**	
Framed Floor	(Note 5)			153.9	**0.0299**	
INTERIOR WALLS						
Gross Wall (Note 6)	8.0	128.0		1024.0		
Mass Wall (Note 6)	**8.0**	**14.0**	**3.0**	**336.0**	**0.1028**	
Unframed Wall	**(Note 6)**			**619.2**	**0.0457**	
Framed Wall	**(Note 6)**			**68.8**	**0.0051**	
TRANSMITTED SOLAR, INTERIOR DISTRIBUTION SUMMARY						
Total Opaque Interior Surface Area		(Note 7)		**6232.7**	**0.8010**	
Solar to Air (or low-mass furnishings)					0.1750	
Solar Lost (back out through windows)					**0.0240**	(Note 8)

Note 1: Changes to Case L120A are highlighted with bold font.

Note 2: Calculation of Inside Solar Fractions for Case P100A is described in Appendix F.

Note 3: Because of the large amount of glazing on the south wall (see Figure 2-28), the only place for batt insulation is above the window headers; remaining wall area contains only the framed section of Figure 2-9 (Case L120A).

Note 4: Insulated and framed exterior wall sections are defined in Figure 2-9 (Case L120A). ASHRAE framed area fraction of 0.22 is assumed for 2x6 24" O.C. construction.

Note 5: Insulated and framed floor and ceiling sections are defined in Figures 2-30 and 2-10 (Case L120A) respectively. ASHRAE roof/ceiling framing area fraction of 0.1 applied to both ceiling and floor.

Note 6: Width is the length of interior walls from Figure 2-2 (Case L100A) and Figure 2-28.

Framed wall area is assumed to be 10% of gross wall area for 2x4 16" O.C. framing. Only one side of the wall is considered for listed area. This area is multiplied by 2 for determining solar fractions. Solar fractions shown are for just one side of the wall. Interior walls within the conditioned zone have been included for the purpose of modeling the effect of their mass. They are not inteneded to divide the conditioned zone into separately controlled zones.

Note 7: Total area of just those surfaces to which an inside solar fraction is applied.

Note 8: Calculated using the algorithm described in Appendix E.

hspec4.wk3, j:a110..g167 21-Jul-95

Table 2-51. Material Descriptions, Floor Over Vented Crawl Space—Case P100A

FLOOR OVER VENTED CRAWL SPACE (inside to outside) (Note 1) ELEMENT	Thickness in	R h*ft²*F/ Btu	U Btu/ h*ft²*F	k Btu/ h*ft*F	DENSITY lb/ft³	Cp Btu/lb*F
Int Surf Coef (Note 2)		0.765	1.307			
Brick Pavers	**2.19**	**0.243**	**4.114**	**0.7500**	**135.0**	**0.24**
Plywood 3/4"	0.75	0.937	1.067	0.0667	34.0	0.29
Fiberglas batt (Note 3)	**7.25**	**24.000**	**0.042**	**0.0252**	**0.66**	0.20
Joists 2x8 16" O.C. (Note 4)	**7.25**	**9.058**	**0.110**	0.0667	32.0	0.33
Ext Surf Coef (Note 5)		0.455	2.200			
Total air-air, insulated section		**26.400**	**0.038**			
Total air-air, frame section		**11.458**	**0.087**			
Total air-air, composite section (Note 6)		**23.354**	**0.043**			
Total surf-surf, composite section (Note 7)		**22.134**	**0.045**			

Note 1: Changes to Case L120A highlighted by bold font.
Note 2: Average of ASHRAE heating and cooling coefficients.
Note 3: Insulated section only, see Figure 2-29 for section view of floor. Properties account for compression of 8" batt into 7.25" cavity.
Note 4: Framed section only, see Figure 2-29 for section view of floor.
Note 5: Still air and brick/rough plaster roughness assumed; see Appendix C for exterior film coefficient as a function of windspeed and surface roughness. This coefficient is applied to entire floor area (1539 ft²).
Note 6: ASHRAE roof/ceiling framing area fraction of 0.1 applied.
Note 7: Total air-air composite R-value less the film resistances.

hspec4.wk3 n:a240..g267 21-Jul-95

Table 2-52. Material Descriptions, Interior Mass Wall—Case P100A

INTERIOR MASS WALL (Note 1) ELEMENT (Source)	Thickness in	R h*ft²*F/ Btu	U Btu/ h*ft²*F	k Btu/ h*ft*F	DENSITY lb/ft³	Cp Btu/lb*F
Int Surf Coef		0.685	1.460			
Face Brick	**4.0**	**0.444**	**2.250**	**0.7500**	**130.0**	**0.24**
Face Brick	**4.0**	**0.444**	**2.250**	**0.7500**	**130.0**	**0.24**
Int Surf Coef		0.685	1.460			

Note 1: Changes to Case L120A are highlighted by bold font; change only mass walls designated in Figure 2-28.

hspec4.wk3 g:a20..g31 09-Aug-95

Table 2-53. Gross Window Summary Double-Pane, Clear, Wood Frame Window—Case P100A

Property	Value Units	Notes
GENERAL PROPERTIES		
Area, gross window	16.25 ft^2	(Note 1)
Width, frame	2.75 in	
Area, frame	4.38 ft^2	
Area, edge of glass (EOG)	3.78 ft^2	
Area, center of glass (COG)	8.09 ft^2	
Area, net glass	11.87 ft^2	(Area,EOG + Area,COG)
OPTICAL PROPERTIES		
Absorptance, frame	0.60	
Transmittance, frame	0.00	
COG/EOG optical properties	(see Table 2-54)	(Note 2)
Solar Heat Gain Coefficient (SHGC), gross window	0.577	(Note 3)
Shading Coefficient (SC), gross window	0.672	(Note 3)
Dividers, curtains, blinds, and other obstructions in window	None	
THERMAL PROPERTIES (conductances/resistances include film coefficients)		
Conductance, frame	0.492 Btu/(h ft^2 F)	Wood frame with metal spacer
(R-Value)	2.031 h ft^2 F/Btu	(Note 4)
Conductance, edge of glass	0.588 Btu/(h ft^2 F)	
(R-Value)	1.700 h ft^2 F/Btu	
Conductance, center of glass	0.483 Btu/(h ft^2 F)	
(R-Value)	2.070 h ft^2 F/Btu	
Conductance, net glass	0.516 Btu/(h ft^2 F)	(Note 5)
(R-Value)	1.936 h ft^2 F/Btu	
Conductance, gross window	0.510 Btu/(h ft^2 F)	(Note 6)
(R-Value)	1.961 h ft^2 F/Btu	
COMBINED SURFACE COEFFICIENT CONDUCTANCES		
Exterior Surf Coef, glass and frame	4.226 Btu/(h ft^2 F)	based on output of WINDOW 4.1
Interior Surface Coefficient, glass	1.397 Btu/(h ft^2 F)	based on output of WINDOW 4.1
Interior Surface Coefficient, frame	1.460 Btu/(h ft^2 F)	from ASHRAE

Note 1: Area for one representative window unit. See Figure 2-31 for schematic representation of frame, center-of-glass (COG) and edge-of-glass (EOG) areas. Gross window area is the sum of frame, COG, and EOG areas.

Note 2: Edge-of-glass optical properties are the same as the center-of-glass optical properties. Table 2-55 gives optical properties as a function of incidence angle.

Note 3: These are overall window (COG, EOG, and frame) properties for direct normal solar radiation.

Note 4: The frame conductance presented here is based on the ASHRAE value for operable two-pane window with wood/vinyl frame and metal spacer adjusted for the exterior surface coefficients also shown in this table. Material properties for dynamic modeling of window frames (density, specific heat, etc.) are not given.

Note 5: Net glass conductance includes only the COG and EOG portions of the window.

Note 6: Gross window conductance includes the frame, EOG, and COG portions of the window.

hspec4.wk3, m:a103..h149 21-Jul-95

Table 2-54. Glazing Summary Clear Double Pane Center-of-Glass Values—Case P100A

Property	Value	Units	Source
GENERAL PROPERTIES			
Number of Panes	2		
Pane Thickness	0.118	in	
Air Gap Thickness	0.500	in	
SINGLE PANE OPTICAL PROP.	(Note 1)		
Transmittance	0.837		
Reflectance	0.075		
Absorptance	0.088		
Index of Refraction	1.5223		
Extinction Coefficient	0.7806	/in	
DOUBLE PANE OPTICAL PROP.			
Transmittance	0.705		
Reflectance	0.128		
Absorptance (outer pane)	0.094		
Absorptance (inner pane)	0.074		
Solar Heat Gain Coefficient (SHGC)	0.760		
Shading Coefficient (SC)	0.887		
Optical Properties as a Function of Incident Angle	(See Table 2-55)		
THERMAL PROPERTIES			
Conductivity of Glass	0.520	Btu/(h ft F)	
Combined Radiative and Convective Coefficient of Air Gap	0.926		
(R-Value)	1.080		
Conductance of Glass Pane	52.881	Btu/(h ft^2 F)	
(R-Value)	0.019	h ft^2 F/Btu	
Exterior Combined Surface Coef.	4.226	Btu/(h ft^2 F)	
(R-Value)	0.237	h ft^2 F/Btu	
Interior Combined Surface Coef.	1.397	Btu/(h ft^2 F)	
(R-Value)	0.716	h ft^2 F/Btu	
U-Value, Air-Air	0.483	Btu/(h ft^2 F)	
(R-Value)	2.070	h ft^2 F/Btu	
Hemispherical Infra-red Emittance	0.84		
Infra-red Transmittance	0		
Density of Glass	154	lb/ft^3	
Specific Heat of Glass	0.18	Btu/(lb F)	

Note 1: Optical properties listed in this table are for direct normal radiation.

hspec4.wk3, m:a1..f42 21-Jul-95

Table 2-55. Optical Properties as a Function of Incidence Angle for Clear Double-Pane Glazing—Case P100A

	Properties (Notes 1, 2)				
Angle	Trans	Refl	Abs Out	Abs In	SHGC
0	0.705	0.128	0.094	0.074	0.760
10	0.704	0.128	0.094	0.074	0.759
20	0.700	0.128	0.096	0.076	0.757
30	0.693	0.130	0.099	0.078	0.751
40	0.678	0.139	0.103	0.080	0.738
50	0.646	0.164	0.109	0.081	0.708
60	0.577	0.226	0.117	0.081	0.639
70	0.436	0.363	0.127	0.074	0.495
80	0.204	0.608	0.133	0.055	0.252
90	0.000	1.000	0.000	0.000	0.000
Hemis	0.601	0.205	0.108	0.076	0.659

Note1: Trans = Transmittance, Refl = Reflectance, Abs Out = Absorptance of outer pane, Abs In = Absorptance of inner pane, SHGC = Solar Heat Gain Coefficient, Hemis = Hemispherically integrated property. Transmittance, reflectance, and SHGC are overall properties for the entire glazing system (excluding the frame).

Note 2: Output is from WINDOW 4.1. SHGC accounts for surface coefficients and is based on windspeed of 10.7 mph.

hspec4.wk3,b:a169..g193 09-Aug-95

2.4.3 Case P105A: Passive Solar with Overhang

Case P105A is **exactly as Case P100A except** that a south wall opaque overhang has been included that extends outward horizontally 3.47 ft. with vertical offset of 2.08 ft. from the top of the window (0.83 ft. from the top of the wall) as shown in Figure 2-32. The overhang traverses the entire length of the south wall. This overhang is representative of appropriate passive solar design for Denver. Overhang width and offset are based on full shading for a summer noon solar altitude angle of 68°, and no shading for a winter noon solar altitude angle of 31°. Window locations remain as shown in Figure 2-28.

Depending on the input capabilities of your software it may not be possible to model the exact geometries of the windows and overhang as shown in Figures 2-28 and 2-32. If this is the case, a simplified model of the south wall may be used such as the conceptual description shown in Figure 2-33. Proper dimensions for this example would be obtained using Figure 2-28, Figure 2-31, and Table 2-50. While the overhang is not shown in Figure 2-33, it must be included as shown in Figure 2-32.

Recall from Section 1, this test requires that you use the most detailed level of modeling your tool will allow.

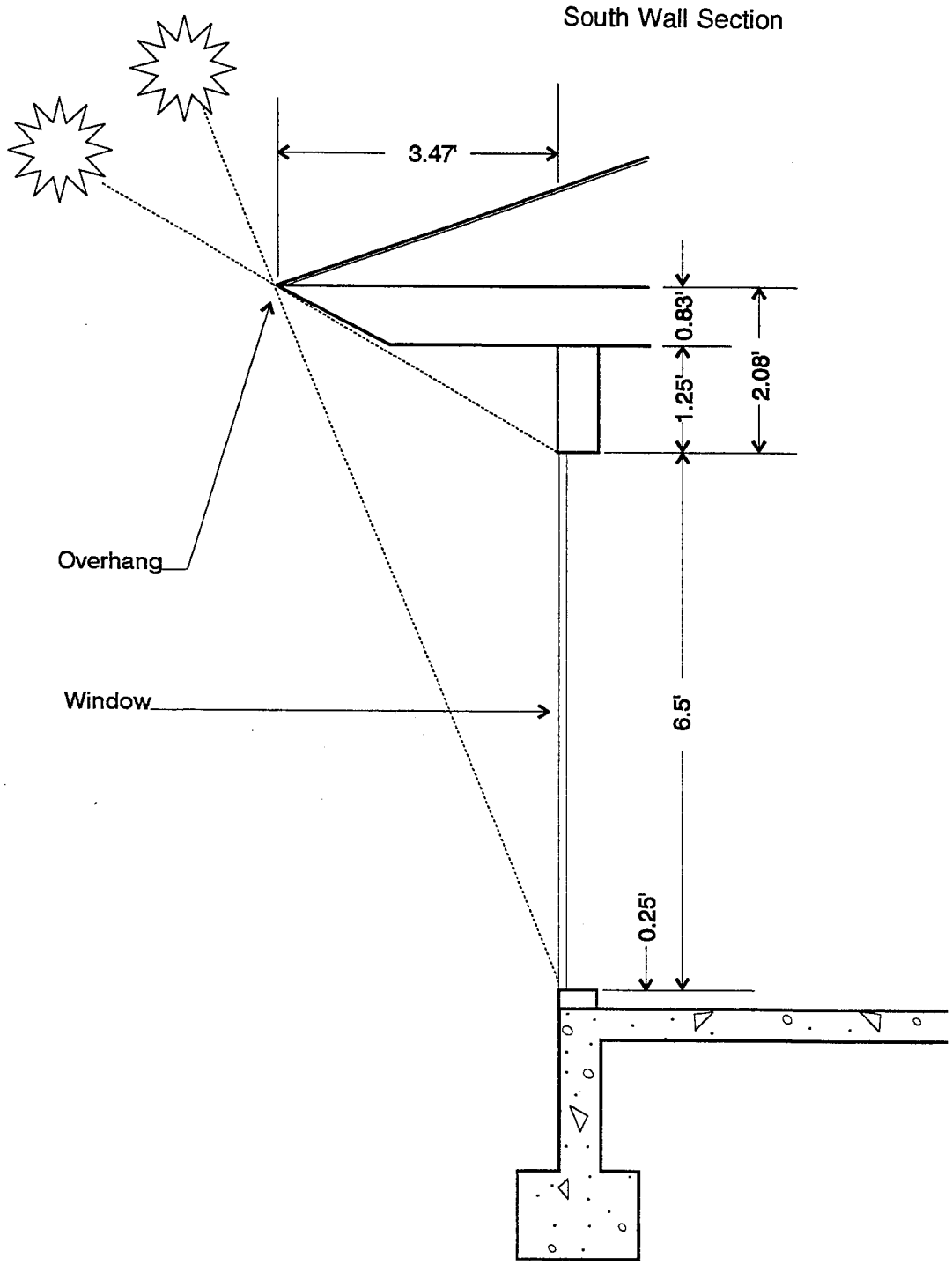

Note: Overhang traverses entire length of south wall.

CD-RH06-A0327330

Figure 2-32. South overhang—Case P105A

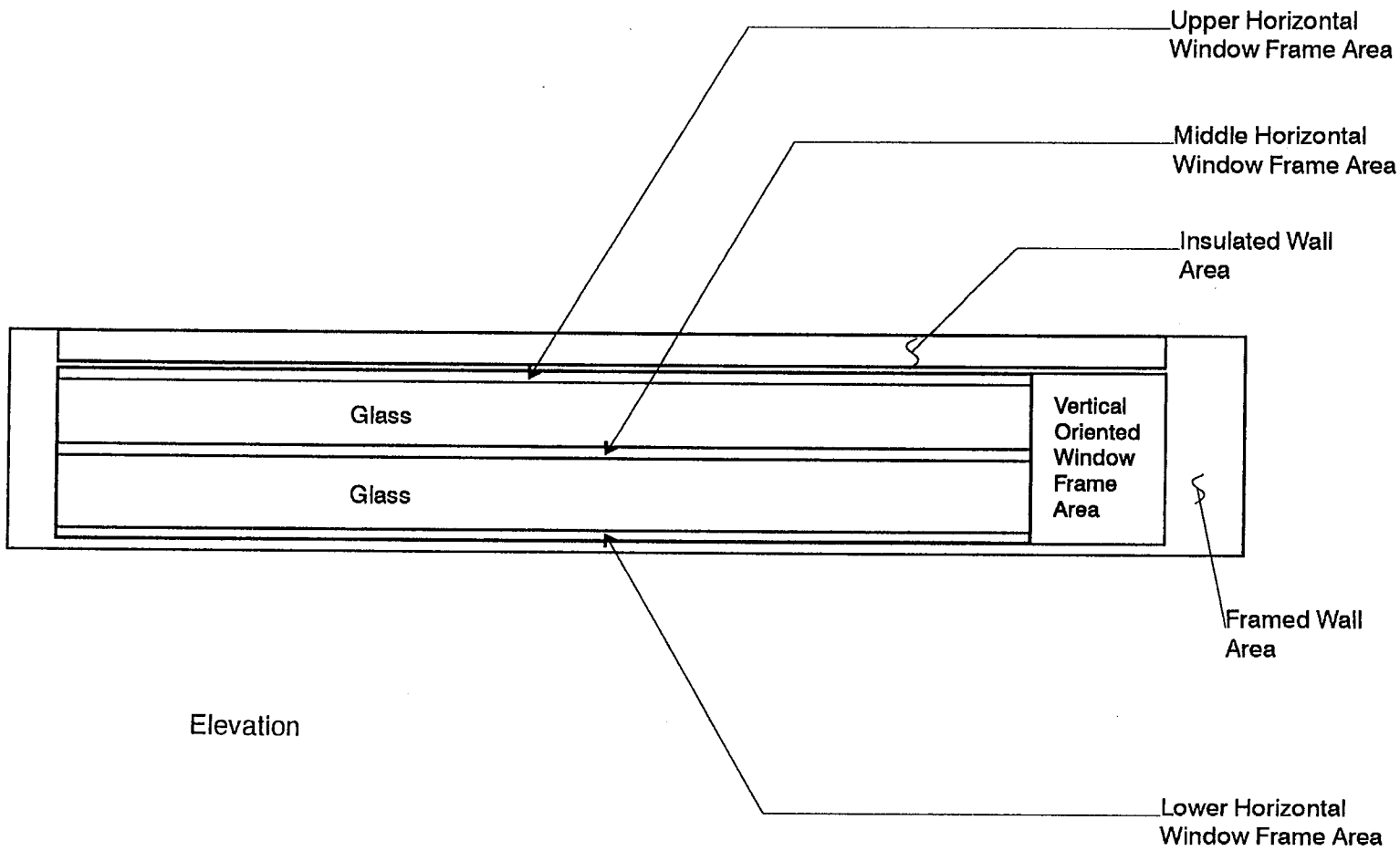

Figure 2-33. Example model of south wall for simulating south overhang effect in Case P105A

CD-RH06-A0327328

2.4.4 Case P110A: Low-Mass Version of Case P100A

Case P110A is **exactly as Case P100A except** for the following changes. The brick pavers have been removed from the floor and replaced with an equivalent resistance massless floor covering. Also, the three massive interior walls have been replaced with low-mass interior walls such that all interior walls are now configured as in Case L100A (Tier 1 base case).

The following figures and tables highlight these changes:

- Figure 2-7. Interior Wall Section - Case L100A
- Figure 2-34. Floor Above Vented Crawl Space, Section - Case P110A
- Table 2-10. Material Descriptions, Interior Wall - Case L100A
- Table 2-56. Building Thermal Summary - Case P110A
- Table 2-57. Component Surface Areas and Solar Fractions - Case P110A
- Table 2-58. Material Descriptions, Floor Over Vented Crawl Space - Case P110A.

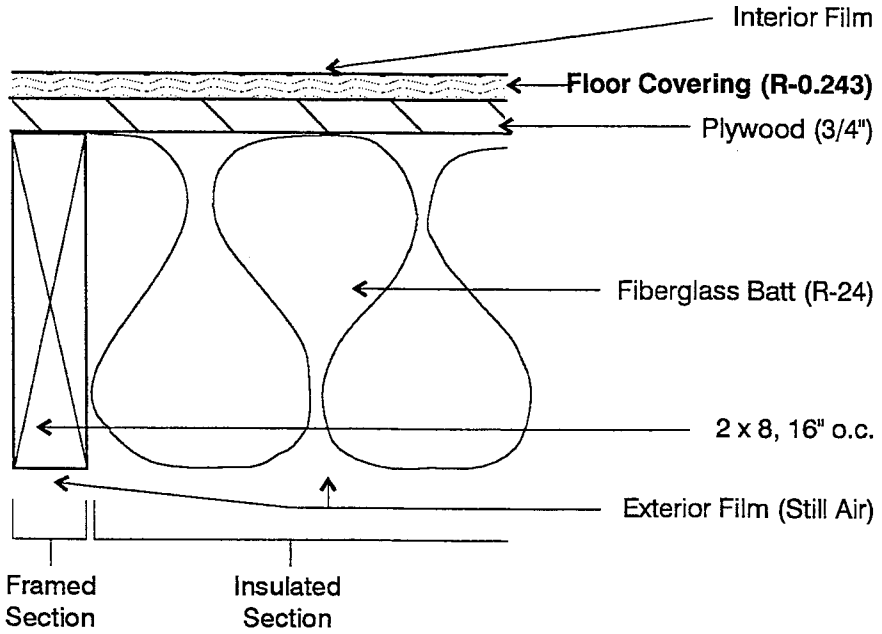

Note: Changes to Case P100A are highlighted with bold font.

CD-RH06-A0327336

Figure 2-34. Floor above vented crawl space, section—Case P110A

Table 2-56. Building Thermal Summary—Case P110A

ELEMENT (Note 1)	AREA ft2	R h*ft2*F/Btu (Note 2)	U Btu/(h*ft2*F) (Note 2)	UA Btu/(h*F) (Note 2)	HEATCAP Btu/F (Note 3)
N/E/W Ext Walls (Note 4)	848	23.58	0.042	36.0	1435
Doors	40	3.04	0.329	13.2	62
South Windows (Note 5)	325	1.96	0.510	165.7	
South Ext Insulated Wall	50	27.18	0.037	1.8	32
South Ext Framed Wall	81	16.05	0.062	5.0	441
Ceiling/Attic/Roof (Note 6)	1539	59.53	0.017	25.9	1850
Floor (Note 6)	1539	23.35	0.043	65.9	**2041**
Infiltration					
Colorado Springs, CO				118.2	
Interior Low Mass Walls	**1024**				**1425**
TOTAL BUILDING					**7285**
Excluding Infiltration				313.5	
Including Infiltration (Colorado Springs, CO)				431.7	

PASSIVE SOLAR DESIGN SUMMARY

Net south glass area (ft^2)	S.GL.A/ Floor A	Heatcap/ S.GL.A Btu/($F*ft^2$)	Mass A/ S.GL.A	LCR (Note 7) Btu/(day*F*ft^2)
237	**0.154**	**30.7**	**0.00**	**31.3**

Note 1: Changes to Case P100A are highlighted by bold font.

Note 2: Includes interior and exterior surface coefficients.

Note 3: Heat capacity includes building mass within the thermal envelope (e.g. insulation and insulation thickness of structural framing are included, exterior siding and roof/attic mass are excluded).

Note 4: Excludes area of doors. ASHRAE framed area fraction of 0.22 used for 2x6 24" O.C. construction.

Note 5: Window area and other properties are for glass and frame combined.

Note 6: ASHRAE roof/ceiling framing area fraction of 0.1 used for both ceiling and floor.

Note 7: LCR is Load to Collector area Ratio, calculated from:
((Total building UA including infiltration) - (south glass UA))*(24 h/day)/(south glass area).

hspec4.wk3, r:a733..g765 09-Aug-95

Table 2-57. Component Surface Areas and Solar Fractions—Case P110A

ELEMENT (Note 1)	HEIGHT or LENGTH ft	WIDTH ft	AREA ft^2	INSIDE SOLAR FRACTION
INTERIOR WALLS				
Gross Wall (Note 2)	8.0	128.0	1024.0	
Unframed Wall	(Note 2)		**921.6**	**0.1382**
Framed Wall	(Note 2)		**102.4**	**0.0154**

Note 1: Changes to Case P100A are highlighted with bold font.

Note 2: Width is the total length of all interior walls from Figure 2-2 (Case L100A). Framed wall area is assumed to be 10% of gross wall area for 2x4 16" O.C. framing. Only one side of the wall is considered for listed area. This area is multiplied by 2 for determining solar fractions. Solar fractions shown are for just one side of the wall. Interior walls within the conditioned zone have been included for the purpose of modeling the effect of their mass. They are not intended to divide the conditioned zone into separately controlled zones.

hspec4.wk3, j:a175..g190 21-Jul-95

Table 2-58. Material Descriptions—Case P110A

FLOOR, VENTILATED CRAWL SPACE (inside to outside)

ELEMENT (Note 1)	Thickness in	R $h*ft^2*F/Btu$	U $Btu/h*ft^2*F$	k $Btu/h*ft*F$	DENSITY lb/ft^3	Cp Btu/lb*F
Int Surf Coef (Note 2)		0.765	1.307			
Floor Covering (Note 3)		**0.243**	**4.114**			
Plywood 3/4"	0.75	0.937	1.067	0.0667	34.0	0.29
Fiberglas batt (Note 3)	7.25	24.000	0.042	0.0252	0.66	0.20
Joists 2x8 16" O.C. (Note 4)	7.25	9.058	0.110	0.0667	32.0	0.33
Ext Surf Coef (Note 6)		0.455	2.200			
Total air-air, insulated section		26.400	0.038			
Total air-air, frame section		11.458	0.087			
Total air-air, composite section (Note 7)		23.354	0.043			
Total surf-surf, composite section (Note 8)		22.134	0.045			

Note 1: Changes to Case P100A highlighted by bold font.

Note 2: Average of ASHRAE heating and cooling coefficients.

Note 3: This floor covering is included so that the steady-state air-air composite floor conductance is the same as for the high-mass passive-solar floor. "Floor Covering" replaces "Brick Pavers" in Figure 2-29 (Case P100A).

Note 4: Insulated section only, see Figure 2-29 for section view of floor. Properties account for compression of 8" batt into 7.25" cavity.

Note 5: Framed section only, see Figure 2-29 for section view of floor. Sources are ASHRAE and DOE2.1E. Conductivity is the same as for wall framing.

Note 6: Still air and brick/rough plaster roughness assumed; see Appendix C for exterior film coefficient as a function of windspeed and surface roughness. This coefficient is applied to entire floor area (1539 ft^2).

Note 7: Calculated value, ASHRAE roof/ceiling framing area fraction of 0.1 applied.

Note 8: Total air-air composite R-value less the film resistances.

hspec4.wk3 n:a400..g429 21-Jul-95

2.4.5 Case P140A: Zero Window Area Version of Case P100A

Case P140A is **exactly as Case P100A except** the glazing is removed from the south wall such that the entire southwall is now opaque with material properties per Figure 2-9 (Case L120A) and Table 2-18 (Case L120A).

The following tables summarize the changes:

- Table 2-59. Building Thermal Summary - Case P140A
- Table 2-60. Component Surface Areas - Case P140A.

Table 2-59. Building Thermal Summary—Case P140A

ELEMENT (Note 1)	AREA ft2	R h*ft2*F/Btu (Note 2)	U Btu/(h*ft2*F) (Note 2)	UA Btu/(h*F) (Note 2)	HEATCAP Btu/F (Note 3)
Exterior Walls (Note 4)	**1304**	**23.58**	**0.042**	**55.3**	**2206**
Doors	40	3.04	0.329	13.2	62
Ceiling/Attic/Roof (Note 5)	1539	59.53	0.017	25.9	1850
Floor (Note 5)	1539	23.35	0.043	65.9	11131
Infiltration					
Colorado Springs, CO				118.2	
Interior Low Mass Walls	688				957
Interior High Mass Walls	336				6989
TOTAL BUILDING					**23194**
Excluding Infiltration				**160.2**	
Including Infiltration (Colorado Springs, CO)				**278.4**	

PASSIVE SOLAR DESIGN SUMMARY

Net south glass area (ft^2)	S.GL.A/ Floor A	Heatcap/ S.GL.A Btu/($F*ft^2$)	Mass A/ S.GL.A	LCR Btu/(day*F*ft^2)
0	**0.000**	**N/A**	**N/A**	**N/A**

Note 1: Changes to Case P100A are highlighted by bold font. Windows have been removed from the south wall.
Note 2: Includes interior and exterior surface coefficients.
Note 3: Heat capacity includes building mass within the thermal envelope (e.g. insulation and insulation thickness of structural framing are included, exterior siding and roof/attic mass are excluded).
Note 4: Excludes area of doors. ASHRAE framed area fraction of 0.22 used for 2x6 24" O.C. construction.
Note 5: ASHRAE roof/ceiling framing area fraction of 0.1 used for both ceiling and floor.

hspec4.wk3, r:a773..g800 09-Aug-95

Table 2-60. Component Surface Areas—Case P140A

ELEMENT (Note 1)	HEIGHT or LENGTH ft	WIDTH ft	MULTIPLIER	AREA ft^2
EXTERIOR SOUTH WALL				
Gross Wall	8.0	57.0	1.0	456.0
Insulated L120A Wall (Note 2)				**355.7**
Framed L120A Wall (Note 2)				**100.3**

Note 1: Changes to Case P100A are highlighted with bold font.
Note 2: Insulated and framed exterior wall sections are defined in Figure 2-9 (Case L120A). ASHRAE framed area fraction of 0.22 is assumed for 2x6 24" O.C. construction.

hspec4.wk3, j:a195..g207 21-Jul-95

2.4.6 Case P150A: Even Window Distribution Version of Case P100A

This case is **exactly as Case P100A except** that all windows are evenly distributed among the walls. Interior walls are as in Case P100A. These changes are summarized in the following:

- Figure 2-35. Window Locations - Case P150A
- Table 2-61. Building Thermal Summary - Case P150A
- Table 2-62. Component Surface Areas and Solar Fractions - Case P150A.

For calculating interior solar distribution fractions, we have reverted back to assuming that solar energy transmitted through windows, and not absorbed by light weight furnishings or lost due to cavity albedo, is distributed to all interior surfaces in proportion to their areas. Solar lost (cavity albedo) remains as for Case P100A.

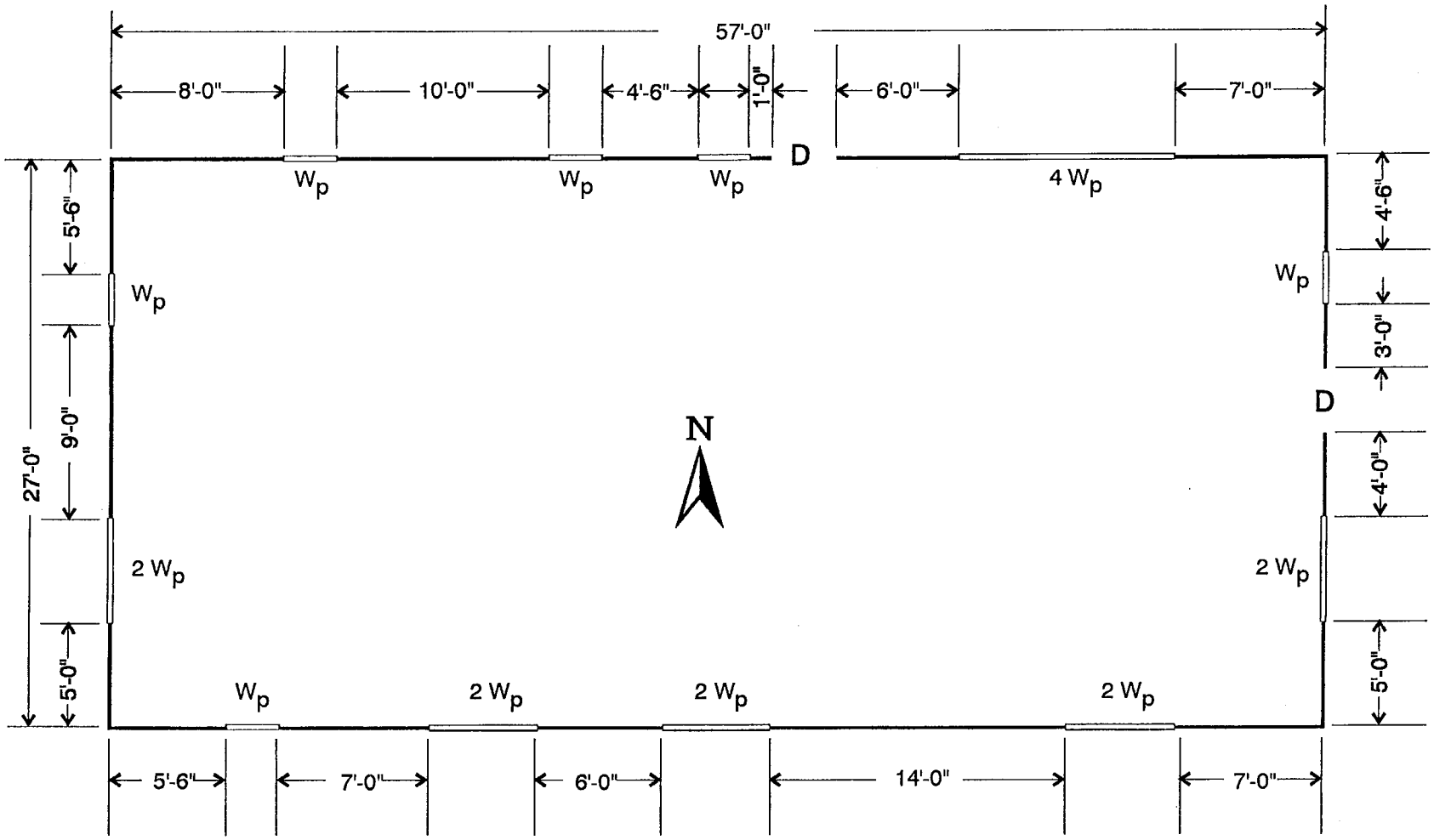

Plan

CD-RH06-A0327329

Legend:

#W_p:

W_p = window (2′6″ wide x 6′6″ high), see Figure 2-31

= number of windows along given length of exterior wall

D = Solid-core wood door (3′ wide x 6′8″ high)

Note: Interior wall locations are same as for Case P100A.

Figure 2-35. Window locations—Case P150A

Table 2-61. Building Thermal Summary—Case P150A

ELEMENT (Note 1)	AREA ft2	R h*ft2*F/Btu (Note 2)	U Btu/(h*ft2*F) (Note 2)	UA Btu/(h*F) (Note 2)	HEATCAP Btu/F (Note 3)
Exterior Walls (Note 4)	**979**	**23.58**	**0.042**	**41.5**	**1656**
North Windows (Note 5)	**113.75**	**1.96**	**0.510**	**58.0**	
East Windows (Note 5)	**48.75**	**1.96**	**0.510**	**24.9**	
West Windows (Note 5)	**48.75**	**1.96**	**0.510**	**24.9**	
South Windows (Note 5)	**113.75**	**1.96**	**0.510**	**58.0**	
Doors	40	3.04	0.329	13.2	62
Ceiling/Attic/Roof (Note 6)	1539	59.53	0.017	25.9	1850
Floor (Note 6)	1539	23.35	0.043	65.9	11131
Infiltration					
Colorado Springs, CO				118.2	
Interior Low Mass Walls	688				957
Interior High Mass Walls	336				6989
TOTAL BUILDING					**22645**
Excluding Infiltration				**312.2**	
Including Infiltration (Colorado Springs, CO)				**430.3**	

PASSIVE SOLAR DESIGN SUMMARY

Net south glass area (ft^2)	S.GL.A/ Floor A	Heatcap/ S.GL.A Btu/($F*ft^2$)	Mass A/ S.GL.A	LCR (Note 7) Btu/(day*F*ft^2)
83	**0.054**	**272.6**	**22.57**	**111.9**

Note 1: Changes to Case P100A are highlighted by bold font. Windows havebeen removed from the south wall.

Note 2: Includes interior and exterior surface coefficients.

Note 3: Heat capacity includes building mass within the thermal envelope (e.g. insulation and insulation thickness of structural framing are included, exterior siding and roof/attic mass are excluded).

Note 4: Excludes area of doors. ASHRAE framed area fraction of 0.22 used for 2x6 24" O.C. construction.

Note 5: Window area and other properties are for glass and frame combined. North and south walls contain 7 window units each; east and west walls contain 3 window units each. These are the same window units as Case P100A (Figure 2-31).

Note 6: ASHRAE roof/ceiling framing area fraction of 0.1 used for both ceiling and floor.

Note 7: LCR is Load to Collector area Ratio, calculated from:

((Total building UA including infiltration) - (south glass UA))*(24 h/day)/(south glass area).

hspec4.wk3, r:a811..g846 09-Aug-95

Table 2-62. Component Surface Areas and Solar Fractions—Case P150A

ELEMENT (Note 1)	HEIGHT or LENGTH ft	WIDTH ft	MULTIPLIER	AREA ft^2	INSIDE SOLAR FRACTION
EXTERIOR SOUTH WALL					(Note 2)
Gross Wall	8.0	57.0	1.0	456.0	
Gross Window	6.5	2.5	**7.0**	**113.8**	
Window Frame Only			**7.0**	**30.7**	**0.0039**
Insulated L120A Wall	(Note 3)			**267.0**	**0.0343**
Framed L120A Wall	(Note 3)			**75.3**	**0.0097**
EXTERIOR NORTH WALL					
Gross Wall	8.0	57.0	1.0	456.0	
Door	6.7	3.0	1.0	20.0	**0.0026**
Gross Window	**6.5**	**2.5**	**7.0**	**113.8**	
Window Frame Only			**7.0**	**30.7**	**0.0039**
Insulated L120A Wall	(Note 3)			**251.4**	**0.0323**
Framed L120A Wall	(Note 3)			**70.9**	**0.0091**
EXTERIOR EAST WALL					
Gross Wall	8.0	27.0	1.0	216.0	
Door	6.7	3.0	1.0	20.0	**0.0026**
Gross Window	**6.5**	**2.5**	**3.0**	**48.8**	
Window Frame Only			**3.0**	**13.2**	**0.0017**
Insulated L120A Wall	(Note 3)			**114.9**	**0.0148**
Framed L120A Wall	(Note 3)			**32.4**	**0.0042**
EXTERIOR WEST WALL					
Gross Wall	8.0	27.0	1.0	216.0	
Gross Window	**6.5**	**2.5**	**3.0**	**48.8**	
Window Frame Only			**3.0**	**13.2**	**0.0017**
Insulated L120A Wall	(Note 3)			**130.5**	**0.0168**
Framed L120A Wall	(Note 3)			**36.8**	**0.0047**
FLOOR/CEILING					
Gross Floor/Ceiling	57.0	27.0	1.0	1539.0	
Insulated Floor/Ceiling	(Note 4)			1385.1	**0.1780**
Framed Floor/Ceiling	(Note 4)			153.9	**0.0198**
INTERIOR WALLS					
Gross Wall (Note 5)	8.0	128.0		1024.0	
Mass Wall (Note 5)	8.0	14.0	3.0	336.0	**0.0432**
Unframed Wall	(Note 5)			619.2	**0.0796**
Framed Wall	(Note 5)			68.8	**0.0088**

Note 1: Changes to Case P100A are highlighted with bold font.

Note 2: Solar energy transmitted through windows is assumed as distributed to interior opaque surfaces in proportion to their areas. Only the radiation not directly absorbed by lightweight furnishings (assumed to exist only for the purpose of calculating inside solar fraction) or lost back out through windows is distributed to interior opaque surfaces.

Note 3: Insulated and framed exterior wall sections are defined in Figure 2-9 (Case L120A). ASHRAE framed area fraction of of 0.22 is assumed for 2x6 24" O.C. construction.

Note 4: Insulated and framed floor and ceiling sections are defined in Figures 2-29 (Case P100A) and 2-10 (Case L120A) respectively. ASHRAE roof/ceiling framing area fraction of 0.1 applied to both ceiling and floor.

Note 5: Width is the length of interior walls from Figure 2-2 (Case L100A) and Figure 2-28 (Case P100A). Framed wall area is assumed to be 10% of gross wall area for 2x4 16" O.C. framing. Only one side of the wall is considered for listed area. This area is multiplied by 2 for determining solar fractions. Solar fractions shown are for just one side of the wall. Interior walls within the conditioned zone have been included for the purpose of modeling the effect of their mass. They are not inteneded to divide the conditioned zone into separately controlled zones.

hspec4.wk3, j:a220..g274 21-Jul-95

APPENDICES

Appendix A

Typical Meteorological Year (TMY) Weather Data Format Description

For convenience we have reprinted the following discussion from the documentation for DOE2.1A *Reference Manual*, (p. VIII-31), and tables (Table 1-23) from "Typical Meteorological Year" (National Climatic Center 1981). The reprint of tables from "Typical Meteorological Year" also includes some additional notes from our experience with TMY data. If this summary is insufficient for your weather processing needs, the complete documentation on TMY weather data can be obtained from the National Climatic Center (NCC) in Asheville, North Carolina. Their address is Federal Building, Asheville, NC 28801-2733, telephone 704-271-4800.

Solar radiation and surface meteorological data recorded on an hourly[1] basis are maintained at the NCC. These data cover recording periods from January 1953 through December 1975 for 26 data rehabilitation stations, although the recording periods for some stations may differ. The data are available in blocked (compressed) form on magnetic tape (SOLMET) for the entire recording period for the station of interest.

Contractors desiring to use a data base for simulation or system studies for a particular geographic area require a data base that is more tractable than these, and also one that is representative of the area. Sandia National Laboratory has used statistical techniques to develop a method for producing a typical meteorological year (TMY) for each of the 26 rehabilitation stations. This section describes the use of these magnetic tapes.

The TMY tapes comprise specific calendar months selected from the entire recorded span for a given station as the most representative, or typical, for that station and month. For example, a single January is chosen from the 23 Januarys for which data are recorded from 1953 through 1975 on the basis of its being most nearly like the composite of all 23 Januarys. Thus, for a given station, January of 1967 might be selected as the typical meteorological month (TMM) after a statistical comparison with all of the other 22 Januarys. This process is pursued for each of the other calendar months, and the twelve months chosen then constitute the TMY.

Although the data have been rehabilitated by NCC, some recording gaps do occur in the SOLMET tapes. Moreover, there are data gaps because of the change from one-hour to three-hour meteorological data recording in 1965. Consequently, as TMY tapes were being constituted from the SOLMET data, the variables data for barometric pressure, temperature, and wind velocity and direction were scanned on a month-by-month basis, and missing data were replaced by linear interpolation. Missing data in the leading and trailing positions of each monthly segment are replaced with the earliest/latest legitimate observation.

Also, since the TMMs were selected from different calendar years, discontinuities occurred at the month interfaces for the above continuous variables. Hence, after the monthly segments were rearranged in calendar order, the discontinuities at the month interfaces were ameliorated by cubic spline smoothing covering the six-hourly points on either side of the interface.

---

[1]Hourly readings for meteorological data are available through 1964; subsequent readings are on a three-hour basis.

TAPE DECK	
9734	**Table A-1. Typical Meteorological Year Data Format**

Tape Field Number[a]	Tape Positions[a]	Element	Tape Configuration	Code Definitions and Remarks
002	001-005	WBAN Station number	01001–98999	Unique number used to identify each station
003	006–015 006–007 008–009 010–011 012–015	Solar time Year Month Day Hour	 00–99 01–12 01–31 0001–2400	 Year of observation, 00–99 = 1900–1999 Month of observation, 01–12 = Jan.–Dec. Day of month End of the hour of observation in solar time (hours and *minutes*)
004	016–019	Local Standard Time	0000–2359	Local Standard Time in hours and minutes corresponding to end of solar hour indicated in field 003.
101	020–023	Extraterrestrial radiation	0000–4957	Amount of solar energy in kJ/m^2 received at top of atmosphere during solar hour ending at time indicated in field 003, based on solar constant = 1377 J/(m^2 · s). **0000 = nighttime values for extraterrestrial radiation, and 80000 = corresponding nighttime value in field 108. 99999 = nighttime values defined as zero kJ/m^2, for stations noted as "rehabilitated" in the station list.**[b]
102 Use for direct normal solar radiation	024–028 024 025–028	Direct radiation Data code indicator[c] Data[d]	 0–9 0000–4957	Portion of radiant energy in kJ/m^2 received at the pyrheliometer directly from the sun during solar hour ending at time indicated in field 003. **99999 = nighttime values defined as zero kJ/m^2.**
103	 029 030–033	Diffuse radiation Data code indicator[c] Data[d]	 0–9 0000–4957	Amount of radiant energy in kJ/m^2 received at the instrument indirectly from reflection, scattering, etc., during the solar hour ending at the time indicated in field 003. Note: *Diffuse data not available.*
104	034–038 034 035–038	Net radiation Data code indicator[c] Data[d]	 0–9 2000–8000	Difference between the incoming and outgoing radiant energy in kJ/m^2 during the solar hour ending at the time indicated in field 003. A constant of 5000 has been added to all net radiation data. Note: *Net radiation data not available.*
105	039–043 039 040–043	Global radiation on a tilted surface Data code indicator[c] Data[d]	 0–9 0000–4957	Total of direct and diffuse radiant energy in kJ/m^2 received on a tilted surface (tilt angle indicated in station - period of record list) during solar hour ending at the time indicated in field 003. Note: *Data not available.*
	044–058	Global radiation on a horizontal surface		Total of direct and diffuse radiant energy in kJ/m^2 received on a horizontal surface by a pyranometer during solar hour ending at the time indicated in field 003.

TAPE DECK	
9734	**Table A-1. Typical Meteorological Year Data Format**

Tape Field Number[a]	Tape Positions[a]	Element	Tape Configuration	Code Definitions and Remarks
106	044–048 044 045–048	Observed data Data code indicator[c] Data[d]	 0–9 0000–4957	 Observed value. Note: *These data are not corrected. Recommend use of data in field 108.*
107	049–053 049 050–053	Engineering corrected data Data code indicator[c] Data[d]	 0–9 0000–4957	*Note: Recommend use of data in field 108.* Observed value corrected for known scale changes, station moves, recorder and sensor calibration changes, etc.
108 Use for total horizontal solar radiation	054–058 054 055–058	Standard year Corrected data Data code indicator[c] Data[d]	 0–9 000–4957	 Observed value adjusted to Standard Year Model. This model yields expected sky irradiance received on a horizontal surface at the elevation of the station. The value includes the effects of clouds. Note: *All nighttime values coded as 80000 except stations noted as rehabilitated in the station list; for those stations, nighttime values are coded 99999.*[b]
109, 110	059–068 059–064 060–063 065–068	Additional radiation measurements Data code indicators[c] Data[d] Data[d]	 0–9	Supplemental fields A and B for additional radiation measurements: type of measurement specified in station-period of record list.
111	069–070	Minutes of sunshine	00–60	For Local Standard Hour most closely matching solar hour. Note: *Data available only for when observations were made.*
201	071–072	Time of TD 1440 Observations	00–23	Local Standard Hour of TD 1440 Meteorological Observation that comes closest to midpoint of the solar hour for which solar data are recorded.
202	073–076	Ceiling height	0000–3000 7777 8888	Ceiling height in dekameters (dam = m × 10^1); ceiling is defined as opaque sky cover of 0.6 or greater. 0000–3000 = 0 to 30,000 meters 7777 = unlimited; clear 8888 = unknown height of cirroform ceiling

TAPE DECK 9734	Table A-1. Typical Meteorological Year Data Format			
Tape Field Number[a]	Tape Positions[a]	Element	Tape Configuration	Code Definitions and Remarks
203	077–081 077 078–081	Sky condition Indicator Sky condition	 0 0000–8888	Identifies observation after June 1, 1951. Coded by layer in ascending order; four layers are described; if fewer than four layers are present the remaining positions are coded 0. The code for each layer is: 0 = Clear or less than 0.1 cover 1 = Thin scattered (0.1–0.5 cover) 2 = Opaque scattered (0.1–0.5 cover) 3 = Thin broken (0.6–0.9 cover) 4 = Opaque broken (0.6–0.9 cover) 5 = Thin overcast (1.0 cover) 6 = Opaque overcast (1.0 cover) 7 = Obscuration 8 = Partial obscuration
204	082–085	Visibility	0000–1600 8888	Prevailing horizontal visibility in hectometers (hm = m × 10^2). 0000–1600 = 0 to 160 kilometers 8888 = unlimited
205	086–093 086	Weather Occurrence of thunder-storm, tornado, or squall	0–4	0 = None 1 = Thunderstorm—lightning and thunder. Wind gusts less than 50 knots, and hail, if any, less than 3/4 inch diameter. 2 = Heavy or severe thunderstorm—frequent intense lightning and thunder. Wind gusts 50 knots or greater and hail, if any, 3/4 inch or greater diameter. 3 = Report of tornado or waterspout. 4 = Squall (sudden increase of wind speed by at least 16 knots, reaching 22 knots or more and lasting for at least one minute).
	087	Occurrence of rain, rain showers, or freezing rain	0–8	0 = None 1 = Light rain 2 = Moderate rain 3 = Heavy rain 4 = Light rain showers 5 = Moderate rain showers 6 = Heavy rain showers 7 = Light freezing rain 8 = Moderate or heavy freezing rain

TAPE DECK	
9734	**Table A-1. Typical Meteorological Year Data Format**

Tape Field Number[a]	Tape Positions[a]	Element	Tape Configuration	Code Definitions and Remarks
205 (cont'd)	088	Occurrence of drizzle, freezing drizzle	0–6	0 = None 1 = Light drizzle 2 = Moderate drizzle 3 = Heavy drizzle 4 = Light freezing drizzle 5 = Moderate freezing drizzle 6 = Heavy freezing drizzle
	089	Occurrence of snow, snow pellets, or ice crystals	0–8	0 = None 1 = Light snow 2 = Moderate snow 3 = Heavy snow 4 = Light snow pellets 5 = Moderate snow pellets 6 = Heavy snow pellets 7 = Light ice crystals 8 = Moderate ice crystals Beginning April 1963, intensities of ice crystals were discontinued. All occurrences since this date are recorded as an 8.
	090	Occurrence of snow showers or snow grains	0–6	0 = None 1 = Light snow showers 2 = Moderate snow showers 3 = Heavy snow showers 4 = Light snow grains 5 = Moderate snow grains 6 = Heavy snow grains Beginning April 1963, intensities of snow grains were discontinued. All occurrences since this date are recorded as a 5.

TAPE DECK	
9734	**Table A-1. Typical Meteorological Year Data Format**

Tape Field Number[a]	Tape Positions[a]	Element	Tape Configuration	Code Definitions and Remarks
205 (Cont'd)	091	Occurrence of sleet (ice pellets), sleet showers, or hail	0–8	0 = None 1 = Light sleet or sleet showers (ice pellets) 2 = Moderate sleet or sleet showers (ice pellets) 3 = Heavy sleet or sleet showers (ice pellets) 4 = Light hail 5 = Moderate hail 6 = Heavy hail 7 = Light small hail 8 = Moderate or heavy small hail Prior to April 1970, ice pellets were coded as sleet. Beginning April 1970, sleet and small hail were redefined as ice pellets and are coded as a 1, 2, or 3 in this position. Beginning September 1956, intensities of hail were no longer reported and all occurrences were recorded as a 5.
	092	Occurrence of fog, blowing dust, or blowing sand	0–5	0 = None 1 = Fog 2 = Ice fog 3 = Ground fog 4 = Blowing dust 5 = Blowing sand These values recorded only when visibility less than 7 miles.
	093	Occurrence of smoke, haze, dust, blowing snow, or blowing spray	0–6	0 = None 1 = Smoke 2 = Haze 3 = Smoke and haze 4 = Dust 5 = Blowing snow 6 = Blowing spray These values recorded only when visibility less than 7 miles.
206	094–103	Pressure		
	094–098	Sea level pressure	08000–10999	Pressure, reduced to sea level, in kilopascals (kPa) and hundredths.
	099–103	Station pressure	08000–10999	Pressure at station level in kilopascals (kPa) and hundredths. 08000–10999 = 80 to 109.99 kPa
207	104–111	Temperature		
	104–107	Dry bulb	-700 to 0600	°C and tenths
	108–111	Dew point	-700 to 0600	-700 to 0600 = -70.0 to +60.0°C

TAPE DECK	
9734	**Table A-1. Typical Meteorological Year Data Format**

Tape Field Number[a]	Tape Positions[a]	Element	Tape Configuration	Code Definitions and Remarks
	112–118 112–114 115–118	Wind Wind direction Wind speed	 000–360 0000–1500	 Degrees m/s and tenths; 0000 with 000 direction indicates calm. 000–1500 = 0 to 150.0 m/s
209	119–122 119–120 121–122	Clouds Total sky cover Total opaque sky cover	 00–10 00–10	 Amount of celestial dome in tenths covered by clouds or obscuring phenomena. Opaque means clouds or obscuration through which the sky or higher cloud layers cannot be seen.
210	123	Snow cover Indicator	0–1	0 indicates no snow or trace of snow. 1 indicates more than a trace of snow on the ground.
211	124–132	Blank		

[a]Tape positions are the precise column locations of data. Tape Field Numbers are ranges representing topical groups of tape positions.
[b]DRYCOLD.TMY is not defined as a "rehabilitated" station.
[c]Note for Fields 102-110: Data code indicators are:
0=Observed data, 1=Estimated from model using sunshine and cloud data, 2=Estimated from model using cloud data, 3=Estimated from model using sunshine data, 4=Estimated from model using sky condition data, 5=Estimated from linear interpolation, 6=Reserved for future use, 7=Estimated from other model (see individual station notes in SOLMET: Volume 1), 8=Estimated without use of a model, 9=Missing data follows (See model description in SOLMET: Volume 2).
[d]"9s" may represent zeros or missing data or the quantity nine depending on the positions in which they occur. Except for tape positions 001-023 in fields 002-101, elements with a tape configuration of 9's indicate missing or unknown data.

Appendix B:

Infiltration and Fan Adjustments for Altitude

Infiltration heat loss or gain is a function of ambient air density, which is dependent on altitude. The decline in air density with altitude may be expressed according to the following exponential curve fit:

$$\rho_{air,u} = \rho_{air,0} * e^{a*elev}$$

where:

$\rho_{air,u}$ = Air density at specified elevation
$\rho_{air,0}$ = Air density at sea level = 0.07500 lb/ft^3
e = Inverse Ln
a = -3.71781196 * 10^{-5}/ft
elev = elevation in feet (ft)

This results in:

Air density at 6145 ft = 0.05968 lb/ft^3
Air density at 2178 ft = 0.06917 lb/ft^3.

If your software does not allow variation of air density, the specified infiltration rate is adjusted as:

Corrected Infiltration Rate for 6145 ft altitude = (Specified Rate) x (0.05968/0.07500)
Corrected Infiltration Rate for 2178 ft altitude = (Specified Rate) x (0.06917/0.07500)

Table B-1 summarizes the appropriate variation of infiltration rates from HERS BESTEST specified values for the base case (Case L100A) and cases where infiltration rates or building air volume have varied. These corrections are only to be used with software that does not automatically account for local variations in air density.

Table B-1 also includes values of equivalent thermal conductance due to infiltration (UAinf) corresponding to altitude-corrected air densities where:

$$UAinf = \rho_{air,u} * V * c_p$$

and where:

V = volumetric air flow rate (ft^3/h) converted from values in Table B-1
c_p = specific heat of air = 0.240 Btu/(lbm F).

Table B-1. Infiltration Rate Adjustments for Altitude

	Air Volume (Note 1) (ft^3)	Altitude (ft)	ACH	CFM	UAinf Btu/(h*F)
CASE L100A	12312				
HERS w/ automatic altitude adjustment			0.67	137.5	
HERS w/ site fixed at sea level					
Colorado Springs, CO		6145	0.533	109.4	118.2
Las Vegas, NV		2178	0.618	126.8	136.9
CASE L110A	12312				
HERS w/ automatic altitude adjustment			1.50	307.8	
HERS w/ site fixed at sea level					
Colorado Springs, CO		6145	1.194	244.9	264.5
Las Vegas, NV		2178	1.383	283.9	306.6
CASE L322A (Note 2)	24624				
HERS w/ automatic altitude adjustment			0.335	137.5	
HERS w/ site fixed at sea level					
Colorado Springs, CO		6145	0.267	109.4	118.2
ATTIC (ALL CASES)	3463				
HERS w/ automatic altitude adjustment			2.4	138.5	
HERS w/ site fixed at sea level					
Colorado Springs, CO		6145	1.910	110.2	
Las Vegas, NV		2178	2.213	127.7	

Note 1: Air volumes listed for specific cases only include those of the conditioned zone(s). Unconditioned attic air volume is listed separately.

Note 2: Only used if basement model combines main floor and basement zones into a single aggregate zone. Otherwise, Case L322A main floor zone uses the Case L100A infiltration rate and the basement zone infiltration rate is 0 ACH.

hspec4.wk3, s:a44..f72; 19-Sep-95

Appendix C

Exterior Combined Radiative and Convective Surface Coefficients

If your program does not automatically calculate these values internally, then use the information given below.

Exterior Surface Coefficients: ASHRAE and BLAST calculate the exterior combined radiative and convective surface coefficient as a second order polynomial in wind speed of the form:

$$h = a_1 + a_2V + a_3V^2$$

where the "a" coefficients are dependent on the surface texture. These coefficients are tabulated below for windspeed in knots (Walton 1983, p. 71).

Material	a_1	a_2	a_3
Stucco	2.04	0.535	0.0
Brick/Rough Plaster	2.20	0.369	0.001329
Concrete	1.90	0.380	0.0
Clear Pine	1.45	0.363	-0.002658
Smooth Plaster	1.80	0.281	0.0
Glass	1.45	0.302	-0.001661

Assuming a surface texture of brick or rough plaster, and a mean annual wind speed of 10.7 mph (9.304 knots), then:

Exterior Combined Surface Coefficient for All Walls and Roofs = 5.748 Btu/h-ft²-F

For programs requiring a method for disaggregation of infrared and convective surface coefficients from combined surface coefficients, see Appendix D.

Appendix D

Infrared Portion of Surface Coefficients

Tables D-1 and D-2 show convective and infrared radiative portions of film coefficients for the various orientations and surfaces of HERS BESTEST. The infrared portion of film coefficients is based on the linearized gray-body radiation equation (J. Duffie and W. Beckman):

$$h_i = 4\varepsilon\sigma T^3$$

Where:

ε	=	Infrared emissivity
σ	=	$0.1718 * 10^{-8}$ Btu/(hft^{2}R^4) (Stefan/Boltzmann constant)
T	=	Average temperature of surrounding surfaces (assumed 50°F [510°R] for outside, 68°F [528°R] for inside)
R	=	Rankine (absolute zero = 0°R = -459.67°F)
h_i	=	Infrared radiation portion of surface coefficient.

Other nomenclature used for Tables D-1 and D-2 are:

h_c	=	Convective portion of surface coefficient
h_s	=	Total combined interior surface coefficient
h_o	=	Total combined outside surface coefficient.

In Table D-1 combined exterior surface coefficients are evaluated using the algorithm of Appendix C; combined interior surface coefficients are based on ASHRAE data. In Table D-2 combined interior and exterior surface coefficients are based on the output of WINDOW 4.1.

Table D-1. Disaggregated Film Coefficients for Opaque surfaces

Inside Horizontal Surface (T= 68°F) (528°R) (ε=0.9)	
h_i (Btu/h-ft²-F)	0.908
h_s (Btu/h-ft²-F)	1.307
h_c (Btu/h-ft²-F) = h_s - h_i	0.399
Inside Vertical Surface (T= 68°F) (528°R) (ε=0.9	
h_i (Btu/h-ft²-F)	0.908
h_s (Btu/h-ft²-F)	1.460
h_c (Btu/h-ft²-F) = h_s - h_i	0.552
Inside Sloped (18.4°) Surface (T= 68°F) (528°R) (ε=0.9)	
h_i (Btu/h-ft²-F)	0.908
h_s (Btu/h-ft²-F)	1.330
h_c (Btu/h-ft²-F) = h_s - h_i	0.422
Brick/Rough Plaster, Outside (T= 50°F) (510°R) (windspeed = 10.7 mph) (ε=0.9)	
h_i (Btu/h-ft²-F)	0.819
h_o (Btu/h-ft²-F)	5.748
h_c (Btu/h-ft²-F) = h_o - h_i	4.929
Brick/Rough Plaster, Outside (T= 50°F) (510°R) (windspeed = 0.0 mph) (ε=0.9)	
h_i (Btu/h-ft²-F)	0.819
h_o (Btu/h-ft²-F)	2.200
h_c (Btu/h-ft²-F) = h_o - h_i	1.381

Table D-2. Disaggregated Film Coefficients for Windows and Window Frames

Very Smooth Surface Outside (T = 50°F) (510°R) (windspeed = 9.0 mph) (ε = 0.84)	All Types of Windows		
h_i (Btu/h-ft²-F)	0.764		
h_o (Btu/h-ft²-F)	4.256		
h_c (Btu/h-ft²-F) = h_o - h_i	3.492		
Inside Vertical Surface (T=68°F) (528°R) (ε = 0.84)	**SATB**	**DLEW**	**DW**
h_i (Btu/h-ft²-F)	0.848	0.848	0.848
h_s (Btu/h-ft²-F)	1.460	1.333	1.397
h_c (Btu/h-ft²-F) = h_s - h_i	0.612	0.485	0.549

SATB = Single pane, clear glass, aluminum frame with thermal break
DLEW = Double pane, low-e glass, wood frame with insulated spacer
DW = Double pane, clear glass, wood frame with metal spacer

Appendix E

Detailed Calculation of Solar Lost Due to Cavity Albedo

This section describes the method used to determine "solar lost" for Tables 2-5, 2-25, and 2-50. The assumptions here are useful for the calculation of solar lost, but would result in different inside solar fractions for various opaque surfaces than the area weighting shown in tables that contain solar fractions. A spreadsheet tabulation of the calculation process described below is provided in Table E-1. Note that interior walls have been excluded to simplify the calculation of solar lost.

For single-pane glazing, the solar lost approximations are calculated from:

$SF_n = B1_n + B2_n + B3_n + BR_n$

where:

n ≡ a particular surface

SF ≡ total solar fraction

B1 describes the first "bounce" of incident shortwave radiation assuming all of it initially hits the floor.

$B1_{floor} = \alpha$

$B1_{all\ other} = 0$

α ≡ interior shortwave absorptance of opaque surfaces (all interior surfaces have the same absorptance except for the window which is denoted as α_w).

B2 describes the second "bounce" such that shortwave radiation diffusely reflected by the floor is distributed over other surfaces in proportion to their view-factor-absorptance product.

$B2_{floor\text{-}floor} = 0$

$B2_{floor\text{-}other\ opaque} = (1-\alpha)(FF_i)(\alpha)$

$B2_{floor\text{-}window\ lost} = (1-\alpha)(FF_i)(1-(\rho_w+(N)(\alpha_w)))$

$B2_{floor\text{-}window\ absorbed} = (1-\alpha)(FF_i)(N)(\alpha_w)$

where:

FF are view factors from Figures E-1 and E-2 (Kreith & Bohn)

i ≡ particular surface which the floor "sees." View factors for windows are based on the view factor for the wall where the windows are located, multiplied by the fraction of the area of that wall occupied by the windows. View factors for walls with windows are adjusted similarly. To simplify calculation of solar lost, all windows are assumed located on the south wall (as in Case L150A).

Table E-1. Calculation of Solar Lost (Cavity Albedo)

PROPERTIES Case	L100A or L150A	L130A	P100A
alpha, walls	0.6	0.6	0.6
FF floor, n/s wall	0.09	0.09	0.09
FF floor, e/w wall	0.06	0.06	0.06
FF floor, ceiling	0.70	0.70	0.70
N,i	0.26	0.82	0.63
N,o		0.06	0.12
hemis inner pane alpha	0.098	0.041	0.076
hemis outer pane alpha		0.235	0.108
hemispherical reflectance	0.136	0.391	0.205
FRACTION OF INCIDENT RADIATION ABSORBED			
1ST BOUNCE (B1)			
Floor	0.6000	0.6000	0.6000
2ND BOUNCE (B2)			
S. Window out	0.0131	0.0088	0.0138
S. Window in	0.0004	0.0007	0.0011
S. Wall	0.0123	0.0123	0.0080
N. Wall	0.0216	0.0216	0.0216
E. Wall	0.0144	0.0144	0.0144
W. Wall	0.0144	0.0144	0.0144
Ceiling	0.1680	0.1680	0.1680
Total	0.2441	0.2401	0.2413
3RD BOUNCE (B3)			
Opaque-opaque	0.0894	0.0916	0.0901
S. Window out	0.0058	0.0040	0.0063
S. Window in	0.0002	0.0003	0.0005
Total	0.0954	0.0960	0.0969
REMAINING BOUNCES (BR)			
Opaque-opaque	0.0567	0.0610	0.0575
S. Window out	0.0037	0.0027	0.0040
S. Window in	0.0001	0.0002	0.0003
Total	0.0605	0.0639	0.0618
Total Solar Fraction	1.0000	1.0000	1.0000
Total Solar Lost	**0.0226**	**0.0154**	**0.0240**

ABBREVIATIONS:
alpha = interior shortwave absorptance; FFa,b = Form factor from a to b;
N = fraction of window absorbed solar radiation conducted inward;
hemis = hemispherically integrated.
ASSUMPTIONS:
All solar radiation assumed to initially hit the floor, all south window configuration, interior walls ignored for this calculation, "solar to air" = 0.

hspec4.wk3 o:a110..e156 21-Jul-95

$\rho_w \equiv$ reflectance for specific glazing, hemispherically integrated (diffuse radiation)

$\alpha_w \equiv$ absorptance for specific glazing, hemispherically integrated (diffuse radiation)

$N \equiv$ inward conducted fraction of cavity reflected absorbed solar radiation. For single-pane glass N is the ratio of the exterior film coefficient R-value to the total air-air center of glass R-value (for single-pane windows this is the sum of the interior and exterior film coefficient R-values).

B3 describes the third bounce such that the remaining non absorbed shortwave radiation is distributed over each surface in proportion to its area-absorptance product. In this part and the final part of the calculation below, solar radiative exchange between opaque surfaces can be aggregated as shown in Table E-1.

$$B3_{opaque\text{-}opaque} = (1-\alpha-\Sigma(B2_n))(A_n/A_{total})(\alpha)$$

$$B3_{opaque\text{-}window\ lost} = (1-\alpha-\Sigma(B2_n))(A_n/A_{total})(1-(\rho_w+(N)(\alpha_w)))$$

$$B3_{opaque\text{-}window\ absorbed} = (1-\alpha-\Sigma(B2_n))(A_n/A_{total})(N)(\alpha_w)$$

where:

$A_n \equiv$ area of surface n

$A_{total} \equiv$ total area of all surfaces

BR describes the distribution of all remaining bounces based on distribution fractions from calculations for $B3_n$ above.

$$BR_n = (1-\alpha-\Sigma(B2_n)-\Sigma(B3_n))(B3_n/\Sigma(B3_n))$$

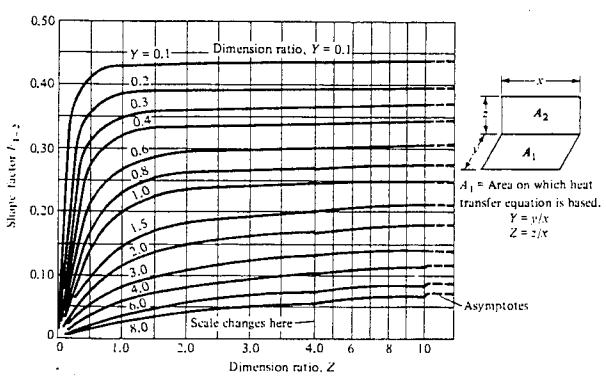

Figure E-1: Shape factor for adjacent rectangles in perpendicular planes sharing a common edge.

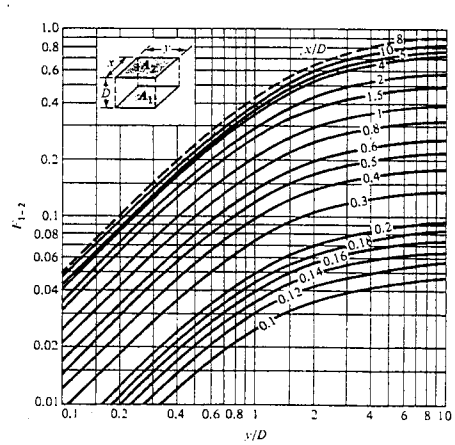

Figure E-2: Shape factor for directly opposed rectangles.

Source: F. Kreith and M. Bohn, Principles of Heat Transfer, Fourth Edition, Harper & Row, New York, NY, 1986, pp. 461, 462.

For double-pane glazing, the solar lost calculation is the same as for single-pane glazing except for the following differences.

$$B2_{\text{floor-window lost}} = (1-\alpha)(FF_i)(1-(\rho_w+N_i\alpha_i+N_o\alpha_o))$$

$$B2_{\text{floor-window absorbed}} = (1-\alpha)(FF_i)(N_i\alpha_i+N_o\alpha_o)$$

$$B3_{\text{opaque-window lost}} = (1-\alpha-\Sigma(B2_n))(A_n/A_{total})(1-(\rho_w+N_i\alpha_i+N_o\alpha_o))$$

$$B3_{\text{opaque-window absorbed}} = (1-\alpha-\Sigma(B2_n))(A_n/A_{total})(N_i\alpha_i+N_o\alpha_o)$$

where:

$\alpha_i \equiv$ inner pane absorptance for specific glazing, hemispherically integrated (diffuse radiation),

$N_i \equiv$ inward conducted fraction of cavity reflected absorbed solar radiation for inner pane,

$\alpha_o \equiv$ outer pane absorptance for specific glazing, hemispherically integrated (diffuse radiation),

$N_o \equiv$ inward conducted fraction of cavity reflected absorbed solar radiation for outer pane.

For double-pane glazing, N_i and N_o are the ratio of total R-value of the components on the exterior side of the pane in question to the total air-air center-of-glass R-value of the double-pane unit (including air gap between panes and interior and exterior film coefficients).

Appendix F

Distribution of Solar Radiation in the Passive Solar Base Case (P100A)

Solar energy transmitted through windows is distributed in the following manner.

Solar lost due to cavity albedo and solar directly absorbed by air (lightweight furnishings) are attributed to total (direct plus diffuse) radiation in proportion to the fractions of direct and diffuse solar radiation transmitted through windows. Direct and diffuse transmitted fractions for south windows were calculated using SERIRES/SUNCODE (Kennedy et al.) and Denver TMY weather data.

The portion of direct-beam radiation not absorbed by lightweight furnishings or lost from cavity albedo is assumed to initially hit only the massive surfaces (floor and interior brick walls), and is distributed among these surfaces according to their areas. Direct-beam radiation that is reflected by the massive surfaces is assumed to be diffusely reflected and is distributed among all interior surfaces in proportion to their areas.

Transmitted diffuse radiation not absorbed by lightweight furnishings or lost from cavity albedo is distributed among all interior surfaces in proportion to their areas.

Resulting interior solar distribution fractions are shown in Table F-1.

Table F-1. Interior Surface Distribution of Solar Radiation for Case P100A

PROPERTIES/ASSUMPTIONS			
alpha, walls	0.6		
Solar to Air	0.175		
Solar Lost	0.0240	(Note 1)	
direct beam frac.	0.7097	(Note 2)	
diffuse frac.	0.2903	(Note 2)	
direct beam floor depth	14 ft	(Note 3)	
direct beam to floor	0.543	(Note 4)	
direct beam to masswall	0.457	(Note 4)	
floor area frac	0.2469	(Note 5)	
mass wall area frac	0.1078	(Note 5)	
	Relative Fractions (Note 6)	Absolute Fractions (Note 7)	
FRACTION OF TRANSMITTED DIRECT BEAM RADIATION ABSORBED			
Floor	0.2609	0.1852	(Note 8)
Interior Mass Wall	0.2197	0.1559	(Note 8)
Remaining reflected	0.3204	0.2274	
FRACTION OF DIFFUSELY REFLECTED BEAM RADIATION ABSORBED			
Floor	0.2469	0.0561	
Interior Mass Wall	0.1078	0.0245	
Remaining Opaque Surfs.	0.6453	0.1467	
FRACTION OF TRANSMITTED DIFFUSE RADIATION ABSORBED			
Floor	0.1978	0.0574	
Interior Mass Wall	0.0864	0.0251	
Remaining Opaque Surfs.	0.5169	0.1500	
TOTAL FRACTIONS			
Solar to Air		0.1750	
Solar Lost		0.0240	
Floor		0.2987	
Interior Mass Wall		0.2055	
Remaining Opaque Surfs.		0.2968	
Total		1.0000	

Note 1: From Appendix E.

Note 2: From SUNCODE south window annual transmitted solar radiation, based on Denver TMY weather data.

Note 3: This is the depth of the mass interior walls.

Note 4: Fraction of initially transmitted direct beam radiation incident on named surface after subtracting out solar-to-air and solar lost.

Note 5: Used for diffuse radiation distribution, based on full floor area.

Note 6: Fraction of the specific type of radition noted below (e.g. direct beam radiation). Transmitted radiation relative fractions assume Solar Lost and Solar to Air noted above.

Note 7: Fraction of total direct plus diffuse transmitted radiation.

Note 8: Fraction of "first bounce" absorbed by named surface. Based on: 1-(solar to air) - (solar lost) x (direct beam fraction to named surface) x (alpha walls).

hspec4.wk3 o:a54..f102; 21-Jul-95

Appendix G

Detailed Ground Coupling Analysis Case Descriptions for Cases L302B, L304B, L322B, and L324B

The results for two types of ground coupling models are included in the Volume 2, Section 3 results to effectively widen the range of reference results (i.e., ease the passing criteria) for cases that include ground coupling analysis. This was done in case a HERS provider is using a more sophisticated algorithm than the application of ASHRAE steady-state heat transfer coefficients.

For the more detailed simulations of ground coupling in Cases L302B, L304B, L322B, and L324B, the following case-by-case discussion describes material properties for modeling thermal mass of portions of the building envelope in thermal contact with the ground. While this more detailed method is not well verified, it does serve to incorporate the effects of mass and solar radiation incident on soil directly into the reference simulations, thus reducing loads versus the various steady-state ASHRAE methods.

Soil modeling and solar effects

In the tables that follow, soil thicknesses may be regarded as curved path lengths for one-dimensional heat conduction between a concrete surface/adjacent soil boundary and a soil/ambient air boundary. Thus, soil is modeled as a large amount of mass in contact with ambient air. Soil conductivity is based on the 9.6 Btu-in/(h-ft^2-F) cited in *ASHRAE 1993 Fundamentals.*

Solar effects on soil are also important (especially regarding shorter conduction path lengths encountered with a slab on grade or the upper portion of a below-grade wall). Soil adjacent to a house is assumed as shaded by the house on average roughly half the time the sun is present. Exterior solar absorptance of the soil surface is assumed as 0.6. Exterior infrared emittance of soil is assumed as 0.9. The adjacent-soil-to-house-wall view factors are small so that infrared radiative exchange is assumed to occur only between soil and sky.

Case L302B Uninsulated Slab on Grade

This case is **exactly as Case L302A except** that Table G-1 is used in place of Table 2-38.

The soil thickness in Table G-1 is based on the ASHRAE perimeter method (*ASHRAE 1993 Fundamentals*, Chp. 25) for a metal stud wall (normalized for 1539 ft^2 floor area) less listed R-values of surface coefficients and the concrete slab and assuming the listed soil conductivity.

Table G-1. Material Descriptions, Slab on Grade Floor—Case L302B

FLOOR, SLAB ON GRADE, UNINSULATED WITH GROUND MASS

ELEMENT (inside to outside)	Thickness in	R $h*ft^2*F/Btu$	U $Btu/h*ft^2*F$	k $Btu/h*ft*F$	DENSITY lb/ft^3	Cp Btu/lb*F
Int Surf Coef (Note 1)		0.765	1.307			
Carpet with fibrous pad		2.080	0.481			
Concrete slab	4.0	0.320	3.125	1.0417	140.0	0.20
Soil (Note 2)	58.3	6.070	0.165	0.8000	94.0	0.19
Ext Surf Coef		0.174	5.748			
Total air-air		9.409	0.106			

Note 1: Average of ASHRAE heating and cooling coefficients.

Note 2: Soil thickness based on ASHRAE perimeter method for a metal stud wall (normalized for 1539 ft^2 floor area) less R-values of surface coefficients and concrete slab assuming the listed soil conductivity. The resulting soil thickness can be thought of as an average curved heat flow path through the soil to ambient air. As a simplification, the layer of sand typically below the concrete slab and the poured foundation wall are assumed to have the same material properties as soil.

hspec4.wk3 k:a100..g118 21-Jul-95

Case L304B Slab on Grade with Perimeter Insulation

This case is **exactly as Case L304A except** that Table G-2 replaces Table 2-40.

The perimeter insulation R-value of Table G-2 is based on the ASHRAE perimeter method for a metal stud wall with R-5.4 perimeter insulation from edge to footer normalized for 1539 ft² floor area, less the R-values of the listed surface coefficients, concrete slab, and soil layers.

Table G-2. Material Descriptions, Slab on Grade Floor—Case L304B

FLOOR, SLAB ON GRADE, PERIMETER INSULATION WITH GROUND MASS						
	Thickness	R	U	k	DENSITY	Cp
(Note 1)		h*ft²*F/	Btu/	Btu/		
ELEMENT (inside to outside)	in	Btu	h*ft²*F	h*ft*F	lb/ft³	Btu/lb*F
Int Surf Coef (Note 2)		0.765	1.307			
Carpet with fibrous pad		2.080	0.481			
Concrete slab	4.0	0.320	3.125	1.0417	140.0	0.20
Soil (Note 3)	**29.1**	**3.035**	**0.330**	**0.8000**	**94.0**	**0.19**
Perimeter insulation (Note 4)		**9.327**	**0.107**			
Soil (Note 3)	**29.1**	**3.035**	**0.330**	**0.8000**	**94.0**	**0.19**
Ext Surf Coef		0.174	5.748			
Total air-air		**18.736**	**0.053**			

Note 1: Changes to Case L302B are highlighted with bold font.
Note 2: Average of ASHRAE heating and cooling coefficients.
Note 3: Total soil path length from Case L302B divided by two.
Note 4: Perimeter insulation R-value based on ASHRAE perimeter method for metal stud wall with R-5.4 perimeter insulation from edge to footer in Colorado Springs normalized for floor area, less R-values of surface coefficients, concrete slab, and soil layers.

hspec4.wk3 k:a125..g146 21-Jul-95

Case L322B Uninsulated Conditioned Basement

This case is **exactly as Case L322A except** that Table G-3 replaces Table 2-43 and just the below-grade concrete wall description of Table 2-42.

For below-grade walls, the associated soil thicknesses are taken directly from *ASHRAE 1993 Fundamentals* (Table 14, p. 25.11). Note that the listed below-grade soils are for parallel conduction paths, each representing 1' of wall height except for the deepest increment, which represents 7" of wall height.

For the below grade slab floor, soil thickness is based on *ASHRAE 1993 Fundamentals* (Table 15, p. 25.11) less R-values of surface coefficients and concrete slab, and multiplied by the listed soil conductivity.

Table G-3. Material Descriptions, Basement Below Grade Wall and Slab Floor—Case L322B

BASEMENT BELOW GRADE WALL (inside to outside) WITH GROUND MASS						
ELEMENT	Thickness in	R h*ft²*F/ Btu	U Btu/ h*ft²*F	k Btu/ h*ft*F	DENSITY lb/ft³	Cp Btu/lb*F
BELOW GRADE CONCRETE WALL						
Int Surf Coef		0.685	1.460			
Poured concrete	6.0	0.480	2.083	1.0417	140.0	0.20
Below grade soil is in parallel paths for listed increments of depth. (Note 1)						
Below grade soil 0'-1' depth	8.16	0.850	1.176	0.8000	94.0	0.19
Below grade soil 1'-2' depth	27.2	2.838	0.352	0.8000	94.0	0.19
Below grade soil 2'-3' depth	46.6	4.850	0.206	0.8000	94.0	0.19
Below grade soil 3'-4' depth	66.2	6.900	0.145	0.8000	94.0	0.19
Below grade soil 4'-5' depth	84.6	8.813	0.113	0.8000	94.0	0.19
Below grade soil 5'-6' depth	103.8	10.813	0.092	0.8000	94.0	0.19
Below grade soil 6'-6'7" depth	123.4	12.850	0.078	0.8000	94.0	0.19
Ext Surf Coef		0.174	5.748			
Total air - air (Note: 2)		5.481	0.182			
BASEMENT BELOW SLAB FLOOR (inside to outside) WITH GROUND MASS						
Int Surf Coef		0.765	1.307			
Poured concrete	4.0	0.320	3.125	1.0417	140.0	0.20
Below grade soil below slab (Note 3)	380.1	39.592	0.025	0.8000	94.0	0.19
Ext Surf Coef		0.174	5.748			
Total air-air (Note 4)		40.851	0.0245			

Note 1: Listed thickness is the ASHRAE (1993 Handbook of Fundamentals, Table 14, p.25.11) conduction path length. Also each layer is only 1' high except for the deepest layer which is only 7" high.

Note 2: Although ASHRAE's soil conductivity was applied, overall U-value calculated by summing parallel heat flow through each increment of soil depth comes out 7% higher than the value of Table 2-42 which was obtained using just the ASHRAE steady-state heat transfer coefficients.

Note 3: Soil thickness based on ASHRAE 1993 Fundamentals, Table 15, p.25.11 (Heat Loss through Basement Floors) less R-values of surface coefficients and concrete slab assuming the listed soil conductivity. The resulting soil thickness can be thought of as an average curved heat flow path through the soil to ambient air. As a simplification, the layer of sand typically below the concrete slab is assumed to have the same material properties as soil.

Note 4: This is the overall heat loss interpolated from ASHRAE 1993 Fundamentals, Table 15, p. 25.11.

hspec4.wk3 q:a254..g293 21-Jul-95

Case L324B Interior Insulated Conditioned Basement

This case is **exactly as Case L324A except** that Table G-4 replaces just the below-grade concrete wall description of Table 2-48.

Table G-4. Material Descriptions, Basement Below Grade Wall—Case L324B

BASEMENT BELOW GRADE WALL (inside to outside) WITH GROUND MASS (Note 1) ELEMENT	Thickness in	R h*ft²*F/ Btu	U Btu/ h*ft²*F	k Btu/ h*ft*F	DENSITY lb/ft³	Cp Btu/lb*F
Int Surf Coef		0.685	1.460			
Plasterboard	**0.5**	**0.450**	**2.222**	**0.0926**	**50.0**	**0.26**
Fiberglass batt (Note 2)	**3.5**	**11.000**	**0.091**	**0.0265**	**0.6**	**0.20**
Frame 2x4, 16" O.C. (Note 3)	**3.5**	**4.373**	**0.229**	**0.0667**	**32.0**	**0.33**
Batt/frame composite (Note 4)		**9.989**	**0.100**			
Poured concrete	6.0	0.480	2.083	1.0417	140.0	0.20
Below grade soil is in parallel paths for listed increments of depth. (Note 5)						
Below grade soil 0'-1' depth	8.16	0.850	1.176	0.8000	94.0	0.19
Below grade soil 1'-2' depth	27.2	2.838	0.352	0.8000	94.0	0.19
Below grade soil 2'-3' depth	46.6	4.850	0.206	0.8000	94.0	0.19
Below grade soil 3'-4' depth	66.2	6.900	0.145	0.8000	94.0	0.19
Below grade soil 4'-5' depth	84.6	8.813	0.113	0.8000	94.0	0.19
Below grade soil 5'-6' depth	103.8	10.813	0.092	0.8000	94.0	0.19
Below grade soil 6'-6'7" depth	123.4	12.850	0.078	0.8000	94.0	0.19
Ext Surf Coef		0.174	5.748			
Total air - air (Note 6)		**15.920**	**0.063**			

Note 1: Changes to Case L322B are highlighted with bold font.

Note 2: Insulated section only, 90% insulated area section.

Note 3: Framed section only, 10% framed area section.

Note 4: Due to the complexity of this below grade wall construction, the insulated framed basement wall was modeled using this combined resistance in the reference simulations. The R-value shown is the total air-air composite section below grade basement wall R-value given in Table 2-48 less the Table 2-48 R-values for interior film coefficient, plasterboard, and "wall and soil".

Note 5: Listed thickness is the ASHRAE (1993 Handbook of Fundamentals, Table 14, p.25.11) conduction path length. Also each layer is only 1' high except for the deepest layer which is only 7" high.

Note 6: The overall U-value calculated by summing parallel heat flow through each increment of soil depth comes out 2% higher than the value of Table 2-48.

hspec4.wk3 q:a300..g337 11-Oct-95

Appendix H

Procedure for Developing Example Pass/Fail Criteria

The certifying agency using HERS BESTEST may adopt this procedure for developing example pass/fail criteria or develop their own procedure. Neither DOE, NREL, or the authors of this report can be held responsible for any misfortunes that occur due to the use of this procedure in your certification program.

Passing a Test

A HERS tool may be thought of as having passed successfully through the test series when its results compare favorably with reference program outputs on a case-by-case and a sensitivity basis (difference or delta (Δ) between certain cases).

Example pass/fail ranges based on fictitious reference results used for this appendix were developed according to the procedure described in the following section and are presented in Table H-1. A HERS tool would pass a case if its result for that case falls within the passing range represented by "Example Range Max" and "Example Range Min" shown in Table H-1. A HERS tool would pass HERS BESTEST if its results are passing for all the cases (including the differences in results for certain cases).

Procedure for Developing Example Passing Ranges

Example values relevant to the discussion below are included in Table H-1. The example passing ranges for each case were developed as follows:

1. Determine the maximum reference result, the minimum reference result, the sample mean (average) of the reference results, and the sample standard deviation (n-1 method) of the reference results. These quantities are shown in Table H-1 as "Ref Max," "Ref Min," "Ref Mean," and "Ref Stds," respectively.

2. Calculate the 90% confidence interval for the population mean assuming a Student's "t" distribution based on the reference results (Spiegel). The extremes (confidence limits) of the 90% confidence interval for the population mean are determined from:

$$L_a = X + (t_c)(s)/(N-1)^{1/2} \qquad \text{(H-1)}$$

$$L_b = X - (t_c)(s)/(N-1)^{1/2} \qquad \text{(H-2)}$$

where:

L_a = maximum confidence limit for the confidence interval
L_b = minimum confidence limit for the confidence interval
X = sample mean
t_c = confidence coefficient, see below
s = sample standard deviation
N = number of samples.

The confidence coefficient (t_c) is determined from the number of samples and the desired confidence interval. Tables of these coefficients and an explanation of how to use the tables should be available in

Table H-1. Example Pass/Fail Criteria Using Fictitious Results

Description	Case #1 (MBtu/y)	Case #2 (MBtu/y)	Delta Case #1 - Case #2 (MBtu/y)
Reference Result #1	73.00	46.00	27.00
Reference Result #2	70.00	45.00	25.00
Reference Result #3	82.00	50.00	32.00
Ref Max	82.00	50.00	32.00
Ref Min	70.00	45.00	25.00
Ref Mean	75.00	47.00	28.00
Ref Stds	6.24	2.65	3.61
Ref 90% Conf Max	87.89	52.46	35.44
Ref 90% Conf Min	62.11	41.54	20.56
Ref Max + 4 MBtu	86.00	54.00	36.00
Ref Max - 4 MBtu	66.00	41.00	21.00
Example Range Max	87.89	54.00	36.00
Example Range Min	62.11	41.00	20.56

hers4.wk3; p:a8..f30; 21-Jul-95

any introductory statistics text book. For this example with three samples and a desired confidence interval of 90%:

$$t_c = 2.92 \tag{H-3}$$

Equations H-1 and H-2 then reduce to:

$$L_a = X + 2.92(s)/2^{1/2} \tag{H-4}$$

$$L_b = X - 2.92(s)/2^{1/2} \tag{H-5}$$

The resulting confidence limits are shown in Table H-1 as "Ref 90% Conf Max" and "Ref 90% Conf Min."

3. Calculate:

   (Ref Max) + 4 MBtu

   and

   (Ref Min) - 4 MBtu.

   The results of these calculations are shown in Table H-1 as "Ref Max + 4 MBtu" and "Ref Min - 4 MBtu."

4. The example passing range ("Range Max", "Range Min") is then determined by taking the maximum of "Ref 90% Conf Max" and "Ref Max + 4 MBtu" as "Range Max" and the minimum of "Ref 90% Conf Min" and "Ref Min - 4 MBtu" as "Range Min". Therefore, using Table H-1, a HERS tool passes a case if its test result falls within the range for that case. Notice in Table H-1 fictitious sets of results are given such that the confidence interval range setting and the "Ref Max + 4 MBtu" and "Ref Min - 4 MBtu" range setting set the range extremes for Case #1 and Case #2 respectively (it is also possible to have results where one range setting method sets one extreme and the other range setting method sets the other extreme as shown in the "Delta Case #1 - Case #2" result of Table H-1).

Procedure for Developing Example Passing Ranges for HERS Programs That Designate Heating and Cooling Seasons

The same procedure described in the previous section can be applied to developing passing ranges for HERS programs that designate heating and cooling seasons. In this case, the annual reference results must be replaced by seasonal reference results developed from the monthly output corresponding to the designated heating and cooling seasons. The remainder of the procedure then applies.

Adjusting Passing Ranges

A certifying agency may prefer to adjust the example range setting criteria to suit its particular needs. To assist with this, some background and other thoughts about range setting are included in the following section.

Background

In choosing our algorithms for determining passing ranges, we wanted to have some buffer zone around the reference results because:

- The reference results do not represent truth, but rather the state of the art in thermal analysis of buildings.
- A result just outside the range of reference results should pass.
- Where reference results ranges are very narrow, we wanted to have some allowable disagreement based on economic criteria that would still pass.

Determining passing ranges using the widest range created by a 90% confidence interval and by extending reference result extremes by 4 MBtu at each extreme serves this purpose as described below.

Use of confidence intervals provides some theoretical basis for developing passing ranges (Spiegel). The 90% confidence level was chosen because a 95% confidence interval for the population mean widens the range of passing beyond our level of comfort based on allowable fuel cost uncertainty. Similarly, we felt the passing range produced with an 80% confidence interval would be too narrow. To adjust confidence intervals, we would choose a confidence coefficient that corresponds to a confidence interval within the range of 80% to 95%.

Where reference results are very close together, the 4 MBtu factor was used because at typical gas prices it represents roughly $25/y, which we take as a threshold of economic uncertainty concern. Depending on fuel prices, climate, mortgage lending policy, and other circumstances in specific regions, it may also make sense to adjust this factor.

Case Discrimination

Some cases may deserve to have more strict passing criteria than would be generated using the range setting described above. A possible example are cases with higher loads. In these cases where the percentage disagreement between reference results can be roughly consistent with those for lower load cases, the higher loads produce a greater extension of the passing range in terms of estimated fuel cost than is seen for lower load cases.

References, Volume 1 and Volume 2

Affordable Housing Through Energy Conservation-A Guide to Designing and Constructing Energy Efficient Homes (Technical Support Document). (1989). Berkeley, CA: Lawrence Berkeley Laboratory.

ASHRAE Handbook Fundamentals. (1993). Atlanta, GA: American Society of Heating, Refrigerating, and Air-Conditioning Engineers; pp. 25.10-25.12.

BLAST User Reference, Volume 1. (1991a). BLAST Support Office. Urbana, IL: University of Illinois.

BLAST User Reference, Volume 2. (1991b). BLAST Support Office. Urbana, IL: University of Illinois.

Bloomfield, D.P. (1988). *An Investigation into Analytical and Empirical Validation Techniques for Dynamic Thermal Models of Buildings.* Executive Summary, Vol. 1, SERC/BRE final report, BRE Garston.

Bowman, N.T. and K.J. Lomas. (1985). "Empirical Validation of Dynamic Thermal Computer Models of Buildings." *Build. Serv. Eng. Res. Technol., 6(4)*; pp. 153-162.

Brick Institute of America. (Sept./Oct. 1980.) *Technical Notes on Brick Construction, Brick Passive Solar Heating Systems Material Properties - Part IV*, #43D.

Carpenter S. and McGowan A. *Effect of Framing Systems on the Thermal Performance of Windows.* ASHRAE Transactions 99(1), pp. 907-914.

Department of Energy 10 CFR Part 437,[Docket No. EE-RM-95-202]. *Voluntary Home Energy Rating System Guidelines.*

DOE-2 Reference Manual (Version 2.1A) Part 1. (May 1981). D. York and C. Cappiello, eds. Berkeley, CA: Lawrence Berkeley Laboratory.

DOE-2 Supplement (Version 2.1E). (January 1994). Berkeley, CA: Lawrence Berkeley Laboratory.

Duffie, J.A. and W.A. Beckman. (1980). *Solar Engineering of Thermal Processes.* New York, NY: John Wiley & Sons.

Energy Policy Act of 1992, Conference Report to Accompany HR 776, October 5, 1992. Order to be printed, Part VI, Residential Energy Efficiency Rating Guidelines, Section 271.

Home Energy Ratings Systems (HERS) Council. (1995). *Guidelines for Uniformity: Voluntary Procedures for Home Energy Ratings.* Washington, D.C.: The Home Energy Rating Systems Council.

Housing Characteristics 1990. Washington, D.C.: U.S. Department of Energy, Energy Information Administration.

Irving, A. (January 1988). *Validation of Dynamic Thermal Models, Energy, and Buildings.* ISSN 0378-7788, Lausanne, Switzerland: Elsevier Sequoia, S.A.

Judkoff, R. (1988). "Validation of Building Energy Analysis Simulation Programs at the Solar Energy Research Institute." *Energy and Buildings*, Vol. 10, No. 3; p. 235.

Judkoff, R., and J. Neymark. (1995). *Building Energy Simulation Test (BESTEST) and Diagnostic Method.* NREL/TP-472-6231. Golden, CO: National Renewable Energy Laboratory.

Judkoff, R.; D. Wortman; B. O'Doherty; and J. Burch. (1983a). *A Methodology for Validating Building Energy Analysis Simulations.* SERI/TR-254-1508. Golden, CO: Solar Energy Research Institute (now NREL).

Kennedy, M.; L. Palmiter; and T. Wheeling. (1992). *SUNCODE-PC Building Load Simulation Program.* Available from Ecotope, Inc., 2812 E. Madison, Seattle, WA, 98112, (206) 322-3753. This software is based on SERIRES-1.0 developed at NREL. (See also Palmiter et al.)

Kreith, F. and M. Bohn. (1986). *Principles of Heat Transfer.* Fourth Edition. New York, NY: Harper & Row.

Latta, J.K. and G.G. Boileau. (1969). *Heat Losses from House Basements.* Canadian Building 19(10):39.

Lomas, K.J. (1991). "Dynamic Thermal Simulation Models of Buildings: New Method of Empirical Validation." *BSER&T* 12(1); pp. 25-37.

McQuiston, F. and J. Spitler. (1992). *Cooling and Heating Load Calculation Manual.* Second Edition. Atlanta, GA: American Society of Heating, Refrigerating, and Air-Conditioning Engineers; p. 4.12.

National Association of Home Builders (NAHB) Research Center. (1992). *1980 Base Case and Feasibility Analysis.* Prepared for National Renewable Energy Laboratory, Golden, CO.

National Climatic Center. (May 1981). *Typical Meteorological Year User's Manual.* TD-9734. Asheville, NC: National Climatic Center.

National Fenestration Rating Council. (1993). *Certified Products Directory.* First Edition. Silver Spring, MD: National Fenestration Rating Council.

National Renewable Energy Laboratory. (1992). *A National Program for Energy-Efficient Mortgages and Home Energy Rating Systems: A Blueprint for Action,* Final Report of the National Collaborative on Home Energy Rating Systems and Mortgage Incentives for Energy Efficiency. Washington, D.C.: National Renewable Energy Laboratory.

Palmiter, M.L., T. Wheeling, R. Judkoff, B. O'Doherty, D. Simms, and D. Wortman. (1983). *Solar Energy Research Institute Residential Energy Simulator (Version 1.0).* Golden, CO: Solar Energy Research Institute (now NREL).

Passive Solar Design Strategies: Guidelines for Home Building, Colorado Springs, Colorado. Passive Solar Industries Council, National Renewable Energy Laboratory, Charles Eley Associates.

Spiegel, M.R. (1961). *Schram's Outline of Theory and Problems of Statistics.* New York, NY: McGraw-Hill.

U.S. Department of Energy. *Notice of Proposed Rule Making, Part VI Residential Energy Efficiency Rating Guidelines, Section 271.*

Walton, G. (March 1983). *Thermal Analysis Research Program Reference Manual* (TARP). NBSIR 83-2655. Washington, D.C.: National Bureau of Standards. (Note that this software is based on BLAST, and the manual has a high level of technical detail. Since the BLAST Support Office does not supply an engineer's manual, the TARP manual is used as a substitute.) A reprint of this document can be obtained through the BLAST Support Office, Department of Mechanical Engineering, University of Illinois, Urbana, IL.

Wang, F.S. (1979.) "Mathematical Modeling and Computer Simulation of Insulation Systems in Below Grade Applications." Presented at ASHRAE/DOE Conference on Thermal Performance of the Exterior Envelopes of Buildings, Orlando, FL, December.

WINDOW 4.1. (March 1994.) Lawrence Berkeley Laboratory, Berkeley, CA 94720, LBL-35298.

REPORT DOCUMENTATION PAGE

Form Approved
ORB NO. 0704-0188

Public reporting burden for this collection of information is estimated to average 1 hour per response, including the time for reviewing instructions, searching existing data sources, gathering and maintaining the data needed, and completing and reviewing the collection of information. Send comments regarding this burden estimate or any other aspect of this collection of information, including suggestions for reducing this burden, to Washington Headquarters Services, Directorate for Information Operations and Reports, 1215 Jefferson Davis Highway, Suite 1204, Arlington, VA 22202-4302, and to the Office of Management and Budget, Paperwork Reduction Project (0704-0188), Washington, DC 20503.

1. AGENCY USE ONLY (Leave blank)	2. REPORT DATE	3. REPORT TYPE AND DATES COVERED
	October 1995	Technical Report

4. TITLE AND SUBTITLE

Home Energy Rating System Building Energy Simulation Test (HERS BESTEST) Volume 1, Tier 1 and Tier 2 Tests User's Manual

5. FUNDING NUMBERS

(TA) BE51.4101

6. AUTHOR(S)

Ron Judkoff, Joel Neymark

7. PERFORMING ORGANIZATION NAME(S) AND ADDRESS(ES)

National Renewable Energy laboratory
1617 Cole Boulevard
Golden, CO 80401-3393

8. PERFORMING ORGANIZATION REPORT NUMBER

NREL/TP-472-7332

9. SPONSORING/MONITORING AGENCY NAME(S) AND ADDRESS(ES)

National Renewable Energy Laboratory
1617 Cole Boulevard
Golden, CO 80401-3393

10. SPONSORING/MONITORING AGENCY REPORT NUMBER

NA

11. SUPPLEMENTARY NOTES

12a. DISTRIBUTION/AVAILABILITY STATEMENT

National Technical Information Service
U.S. Department of Commerce
5285 Port Royal Road
Springfield, VA 22161

12b. DISTRIBUTION CODE

UC-1600

13. ABSTRACT *(Maximum 200 words)*

The Home Energy Rating System (HERS) Building Energy Simulation Test (BESTEST) is a method for evaluating the credibility of software used by HERS to model energy use in buildings. The method provides the technical foundation for "certification of the technical accuracy of building energy analysis tools used to determine energy efficiency ratings," as called for in the Energy Policy Act of 1992 (Title I, Subtitle A, Section 102, Title II, Part 6, Section 271). Certification is accomplished with a uniform set of test cases that facilitate the comparison of a software tool with several of the best public-domain, state-of-the-art building energy simulation programs available in the United States. This set of test cases represents the Tier 1 and Tier 2 Tests for Certification of Rating Tools as described in DOE 10 CFR Part 437 and the HERS Council Guidelines for Uniformity (HERS Council). A third Tier of tests not included in this document is also planned.

14. SUBJECT TERMS

Home Energy Rating System, Building Energy Simulation, Building Energy Simulation Validation

15. NUMBER OF PAGES

155

16. PRICE CODE

A08

17. SECURITY CLASSIFICATION OF REPORT	18. SECURITY CLASSIFICATION OF THIS PAGE	19. SECURITY CLASSIFICATION OF ABSTRACT	20. LIMITATION OF ABSTRACT

NSN 7540-01-280-5500

Standard Form 298 (Rev. 2-89)
Prescribed by ANSI Std. Z39-18
298-102