2-16-96 J-2(1)

December 1995 • NREL/TP-430-20517

Go to NREL/TP-430-20517
Summary Report

Go to NREL/TP-430-20517
Volume 1

# Economic Development Through Biomass System Integration: Volumes 2 – 4

Max M. DeLong
*Northern States Power Company*
*Minneapolis, Minnesota*

National Renewable Energy Laboratory
1617 Cole Boulevard
Golden, Colorado 80401-3393
A national laboratory of the U.S. Department of Energy
Managed by the Midwest Research Institute
for the U.S. Department of Energy
under Contract No. DE-AC36-83CH10093

MASTER

DISTRIBUTION OF THIS DOCUMENT IS UNLIMITED BS

NREL/TP-430-20517 • UC Category: 1503 • DE96000498

# Economic Development Through Biomass System Integration: Volumes 2 – 4

Max M. DeLong
*Northern States Power Company*
*Minneapolis, Minnesota*

NREL Technical Monitor:
Kevin Craig

National Renewable Energy Laboratory
1617 Cole Boulevard
Golden, Colorado 80401-3393
A national laboratory of the U.S. Department of Energy
Managed by the Midwest Research Institute
for the U.S. Department of Energy
under Contract No. DE-AC36-83CH10093

Prepared under Subcontract No. AAE-5-14456-01

October 1995

DISTRIBUTION OF THIS DOCUMENT IS UNLIMITED

**NOTICE**

This report was prepared as an account of work sponsored by an agency of the United States government. Neither the United States government nor any agency thereof, nor any of their employees, makes any warranty, express or implied, or assumes any legal liability or responsibility for the accuracy, completeness, or usefulness of any information, apparatus, product, or process disclosed, or represents that its use would not infringe privately owned rights. Reference herein to any specific commercial product, process, or service by trade name, trademark, manufacturer, or otherwise does not necessarily constitute or imply its endorsement, recommendation, or favoring by the United States government or any agency thereof. The views and opinions of authors expressed herein do not necessarily state or reflect those of the United States government or any agency thereof.

Available to DOE and DOE contractors from:
Office of Scientific and Technical Information (OSTI)
P.O. Box 62
Oak Ridge, TN 37831
Prices available by calling (615) 576-8401

Available to the public from:
National Technical Information Service (NTIS)
U.S. Department of Commerce
5285 Port Royal Road
Springfield, VA 22161
(703) 487-4650

Printed on paper containing at least 50% wastepaper, including 10% postconsumer waste

## Table of Contents


**Chapter** **Page**

**SUMMARY** ..... **1**

**CHAPTER 1 INTRODUCTION** ..... **1-1**

1.1 OBJECTIVE ..... 1-1
1.2 PROJECT DESCRIPTION ..... 1-1

**CHAPTER 2 SUITABILITY OF ALFALFA STEMS FOR GASIFICATION** ..... **2-1**

2.1 INVESTIGATION OF ALFALFA FEEDSTOCK PROPERTIES ..... 2-1
2.1.1 Discussion of Alfalfa Properties ..... 2-2
2.2 DETERMINATION OF BASIC GASIFICATION PROCESS CONDITIONS ..... 2-8
2.3 TECHNICAL CHALLENGES: PILOT PLANT TESTING ..... 2-10

**CHAPTER 3 FUEL SUPPLY TO THE PLANT** ..... **3-1**

**CHAPTER 4 IGCC PLANT DESCRIPTION** ..... **4-1**

4.1 PRELIMINARY PLANT SIZE DETERMINATION ..... 4-1
4.1.1 Combustion Turbine Selection ..... 4-1
4.1.2 Gasifier Capacity ..... 4-3
4.2 GENERAL IGCC PROCESS DESCRIPTION ..... 4-5
4.2.1 Gasification Plant ..... 4-5
4.2.2 Power Plant ..... 4-7
4.3 INTEGRATION INTO EXISTING FACILITIES ..... 4-8
4.3.1 Existing Plant Description ..... 4-8
4.3.2 Site Arrangement ..... 4-8
4.3.3 IGCC Plant Interfaces With Existing Plant ..... 4-8
4.4 INTEGRATION INTO THE FUEL PREPARATION AND ALFALFA PROCESSING PLANT ..... 4-9
4.5 DESCRIPTION OF MAJOR IGCC DEMONSTRATION PLANT COMPONENTS ..... 4-9
4.5.1 Dried Alfalfa Stems Onsite Storage ..... 4-9
4.5.2 Fuel Feed From Onsite Storage to Gasifier Island ..... 4-9
4.5.3 Gasifier Pressurized Feed System ..... 4-10
4.5.4 Bottom Ash Removal System ..... 4-10
4.5.5 Fly Ash Removal System ..... 4-10
4.5.6 Fluidized-Bed Gasifier ..... 4-11
4.5.7 Cyclone ..... 4-11
4.5.8 Gasifier Air System ..... 4-11
4.5.9 Gasification Steam ..... 4-12
4.5.10 Product Gas Cooler ..... 4-12
4.5.11 Hot Gas Cleaning System ..... 4-12
4.5.12 Combustion Turbine System ..... 4-18
4.5.13 Steam Turbine System ..... 4-26
4.5.14 Heat Recovery Steam Generator ..... 4-30
4.5.15 Plant Control System ..... 4-30
4.5.16 Balance of Plant Systems ..... 4-31
4.6 PLANT OPERATION AND MAINTENANCE ..... 4-33
4.6.1 Operation ..... 4-33
4.6.2 Availability, Safety, and Maintenance ..... 4-33

**CHAPTER 5 IGCC PLANT PERFORMANCE ..... 5-1**

5.1 DESIGN CRITERIA ..... 5-1
5.2 OVERALL PLANT PERFORMANCE SUMMARY ..... 5-1
5.2.1 Combustion Turbine Performance ..... 5-4
5.2.2 Steam Turbine Performance ..... 5-4
5.3 IGCC HEAT AND MATERIAL BALANCES ..... 5-4
5.4 PLANT AUXILIARY POWER REQUIREMENTS ..... 5-4
5.5 EMISSIONS SUMMARY ..... 5-8

**CHAPTER 6 WARRANTY AVAILABILITY ..... 6-1**

6.1 GASIFICATION SYSTEM ..... 6-1
6.2 HOT GAS CLEANUP SYSTEM ..... 6-1
6.3 GAS TURBINE ..... 6-1

## LIST OF FIGURES


| Figure No. | | Page |
|---|---|---|
| S-1 | The Tampella IGCC Process for Biomass | S-3 |
| 2-1 | Comparison of Char Gasification Rates of Alfalfa, Corn Stover, Maple Pulpwood, Minnesota Peat, and Bituminous Coal | 2-7 |
| 2-2 | Enviropower's Gasification Pilot Plant in Tampere, Finland | 2-11 |
| 4-1 | Westinghouse 251B12 ECONOPAC Combustion Turbine | 4-2 |
| 4-2 | Westinghouse W201 Combustion Turbine Modified for 90-Btu/SCF Blast Furnace Gas | 4-4 |
| 4-3 | General Arrangement of Hot Gas Cleanup System | 4-16 |
| 4-4 | Hot Gas Cleanup System Layout | 4-17 |
| 4-5 | Hot Gas Cleanup Filter Assembly | 4-18 |
| 4-6 | Longitudinal Cross-Section of 251B12 Combustion Turbine | 4-22 |
| 4-7 | Conceptual Layout 251B12 Turbine for Low-Btu Fuel Application | 4-24 |
| 4-8 | Conceptual MASB Combustor for 251B12 Combustion Turbine | 4-25 |
| 4-9 | MASB 18-in. Test Combustor | 4-26 |
| 4-10 | Westinghouse Single-Case Non-reheat Steam Turbine With Down Exhaust | 4-29 |
| 4-11 | WDPF System Architecture | 4-34 |
| 5-1 | IGCC Process Flow Diagram | 5-7 |

## LIST OF TABLES


| Table No. | | Page |
|---|---|---|
| S-1 | Overall Plant Performance | S-4 |
| 2-1 | Analysis of Alfalfa From Three Counties Near the Granite Falls Plant Site | 2-3 |
| 2-2 | Elemental Ash Analysis of Alfalfa From Three Counties Near the Granite Falls Plant Site | 2-3 |
| 2-3 | Results of IGT Boat Test for Alfalfa Ash Agglomeration Tendency | 2-5 |
| 2-4 | Feed Chopping Results With Alfalfa and Comparison to Hawaiian Bagasse Feedstock | 2-9 |
| 2-5 | Gasifier Scale-Up Data | 2-14 |
| 5-1 | Dry and Wet Bulb Temperatures at Site | 5-2 |
| 5-2 | Alfalfa Stems Analysis | 5-2 |
| 5-3 | Typical Dolomite Analysis | 5-3 |
| 5-4 | Overall Plant Performance | 5-3 |
| 5-5 | Combustion Turbine Performance | 5-5 |
| 5-6 | Steam Turbine Performance | 5-6 |
| 5-7 | Full-Load Auxiliary Power Requirements | 5-6 |
| 5-8 | Total IGCC Emissions at Full Load | 5-10 |

# SUMMARY

The conversion of a sustainable biomass energy crop, alfalfa, into electricity was investigated in this feasibility study by the Northern States Power Company, University of Minnesota, Tampella Power Corporation, Westinghouse Electric Corporation, and Institute of Gas Technology (IGT). The study to determine the costs and feasibility of locating a fluidized-bed integrated alfalfa gasification combined-cycle demonstration project in Minnesota was divided into three areas. Northern States Power Company has the overall responsibility for this study and investigated the business aspects of implementing an alfalfa-to-electricity project at a selected plant site in Granite Falls, Minnesota. The University of Minnesota team has investigated the issues surrounding the growing, harvesting, transportation, and farmer participation in an alfalfa-based energy crop described as a dedicated feedstock supply system (DFSS). They have also investigated a process of separating the leaf fraction from the alfalfa and producing a value-added leaf meal product. Tampella, Westinghouse, and IGT have investigated the conversion of the alfalfa stem fraction into electricity via gasification, gas cleanup, and combustion and steam turbine production of electricity as an integrated gasification combined-cycle (IGCC) process.

The IGCC process feasibility investigation with the alfalfa feedstock is presented in this report. Capital costs and operating and maintenance costs have been derived for the plant. These are included and discussed with various economic options in the Economics and Business Plan, Volume 3.

**The IGCC Process**

Electricity is produced from the alfalfa stems in an IGCC power plant. In a combined-cycle power plant electricity is produced by two separately powered turbine/generators. In the first cycle the turbine is powered by the combustion of biomass gas. The fuel for the combustion turbine is provided by the gasification of the alfalfa stems. The heat in the exhaust gas from the combustion turbine is reclaimed as steam in a heat recovery-steam generator (HRSG). This steam is used to power the turbine in the second cycle. By combining the cycles in this manner and integrating the combined cycles with the gasification process, the overall efficiency of the power plant is maximized. The gasifier is sized to process 1096 tons per day of alfalfa stems to meet the design load requirements of the combustion turbine. The gasification and power production operations are closely integrated as is shown by the alfagas process diagram in Figure S-1.

In the gasifier, the alfalfa stems are rapidly heated to gasification temperatures approaching 1650°F while in contact with air and steam at a pressure of 300 psig. Leaving the gasifier, the gases are cooled to 1020°F and cleaned so that the fuel gas entering the gas turbine meets the manufacturer's requirements.

The combustion turbine is one of Westinghouse's standard industrial designs, which has been modified to accommodate low-Btu biogas fuel. The turbine is equipped with Westinghouse's state-of-the-art gas combustion system, which represents the Best Achievable Control Technology

(BACT) for the mitigation of $NO_x$ in combustion turbines. Some 50.1 MW of electrical power is produced in the gas turbine generator.

The usable heat remaining in hot combustion gases leaving the gas turbine is recovered in the heat recovery steam generator (HRSG) in the form of superheated, high-pressure steam. The steam is used to produce an additional 29.3 MW in the steam turbine generator. The stack gases leaving the HRSG meet or exceed all air quality requirements.

From the total 79.4 MW produced in the IGCC plant, 4.3 MW is used internally as auxiliary equipment power, thus producing net power of 75.1 MW. The overall performance for the Alfagas IGCC plant is summarized in Table S-1. The plant costs and economic analysis are presented in the Economics and Business Plan, Volume 3.

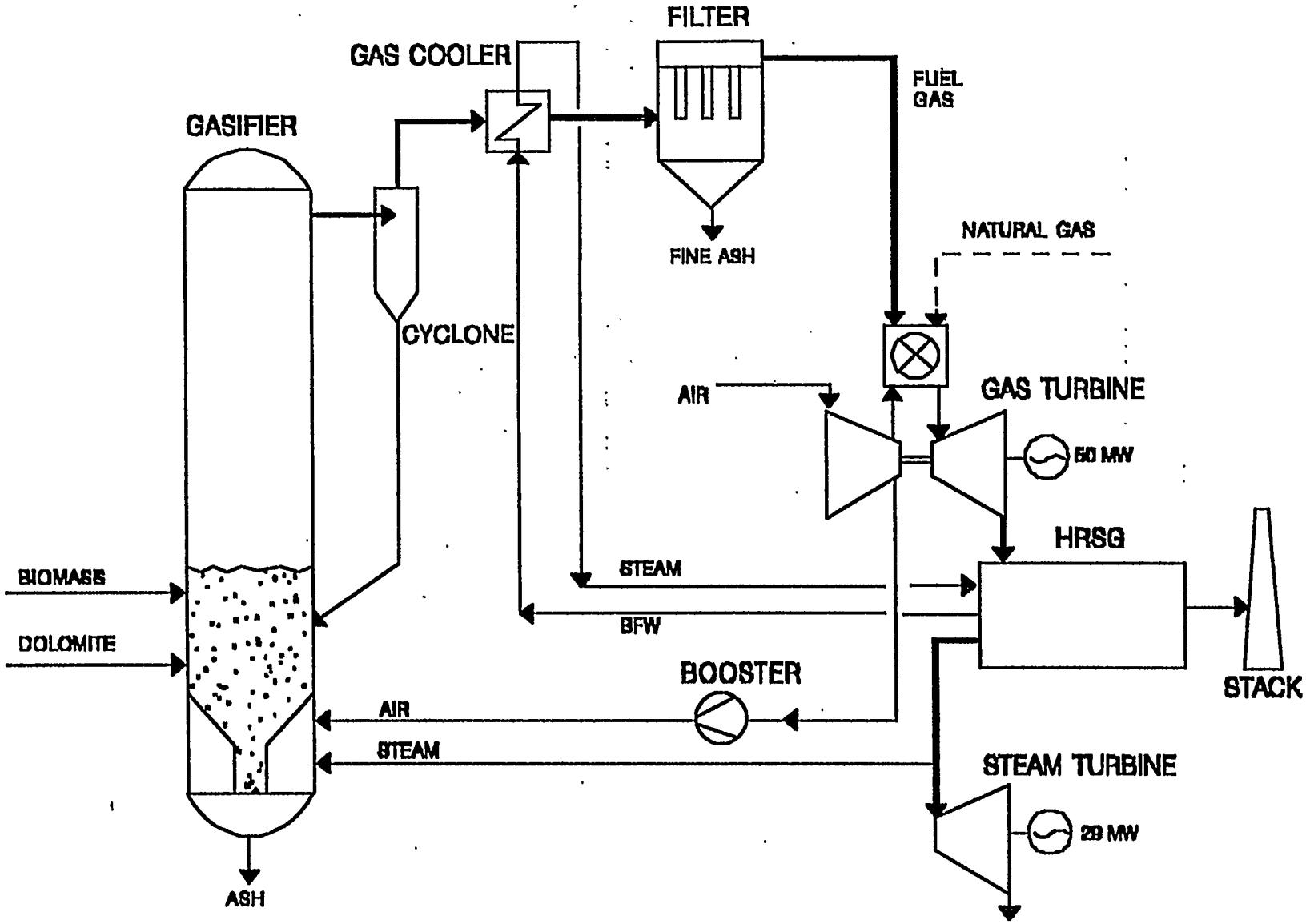


FIGURE 1 THE ALFAGAS PROJECT: 75.1 MW NET POWER PRODUCTION FROM ALFALFA STEMS

| Table S-1. OVERALL PLANT PERFORMANCE | | |
|---|---|---|
| Parameter | Biomass Gas | Natural Gas |
| Dried Biomass Feed Rate, lb/h (9.4% moisture) | 91,300 | 0 |
| Gasifier Heat Input (HHV), MMBtu/h | 669 | 0 |
| Combustion Turbine Firing Rate (HHV), MMBtu/h(note a) | 614 | 574 |
| Heat Export to Leaf Processing Plant | | |
| - Steam @ 4,100 lb/h, MMBtu/h | 5 | 5 |
| - Flue gas @ 310,000 lb/h, MMBtu/h | 20 | 20 |
| Combustion Turbine Gross Power, kW | 50,100 | 53,300 |
| Steam Turbine Gross Power, kW | 29,300 | 19,800 |
| Gross Plant Output, kW | 79,400 | 73,100 |
| Auxiliary Power, kW | 4,310 | 2,710 |
| Net Plant Output, kW | 75,090 | 70,390 |
| Net Plant Heat Rate (HHV), Btu/kWh | 8,910 | 8,155 |
| Net Plant Efficiency (HHV), % | 38.3 | 41.9 |

(a) Biomass gas inlet temperature 1,020°F, HHV = 155 Btu/SCF, LHV = 143 Btu/SCF

# Chapter 1 INTRODUCTION

## 1.1 Objective

The objective of this study is to determine the technical feasibility of building and locating a fluidized-bed integrated gasification combined cycle (IGCC) demonstration plant in southwestern Minnesota for operation on alfalfa stems. The alfalfa stem feedstock, which is provided as a dedicated feedstock supply system (DFSS), is to be evaluated for suitability for gasification. Technical issues to be investigated include feeding the alfalfa to the pressurized gasifier, operating the gasifier, and cleaning the product gas for combustion in the power turbine. Areas for further investigation and testing that would reduce design risks and costs associated with overly conservative design are to be identified. Suggestions for future process equipment or parametric evaluation tests, sensitivity studies, and issues concerning reliable operation are sought.

Capital, operating, and maintenance costs are to be developed for the economic evaluation of the IGCC plant and preparation of a business plan.

## 1.2 Project Description

Northern States Power (NSP) has initiated a study to determine the feasibility of an alfalfa gasification-combined cycle electric power generation facility. The alfalfa feedstock proposed is an available sustainable energy crop. The biomass gasification technology of Tampella Power Corporation, licensed from the process developer, the Institute of Gas Technology, is ready for demonstration. Westinghouse Electric Corporation provides the technology of hot gas cleanup and a low-Btu gas combustion turbine to maximize the overall process efficiency. The University of Minnesota's Center for Alternative Plant and Animal Products (CAPAP), working with various agriculture and agri-business groups, will study the alfalfa production system needed and also evaluate a co-product process to separate the alfalfa into a leaf and stem fraction. The stems will be delivered to the gasifier, and the leaf fraction will produce a value-added animal leaf meal product.

A region in southwestern Minnesota has been selected that has the production capability for alfalfa and an existing power plant where the IGCC plant could be placed. The power plant is central to the alfalfa production area, and the existing site could accommodate an integrated DFSS and the conversion equipment to build a fully integrated energy and co-product production system.

The purpose of this study is to assess the commercial readiness of 1) the alfalfa supply system, 2) the conversion technology for the production of electricity, and 3) the integration of agricultural production and utility operations for co-product processing.

# Chapter 2 SUITABILITY OF ALFALFA STEMS FOR GASIFICATION

The alfalfa stem feedstock was analyzed chemically and physically. The analyses were compared with a similar biomass feedstock; namely bagasse, that has been successfully gasified in a fluidized-bed gasifier. The initial results are positive, and the alfalfa stem feedstock is expected to be as good as the bagasse feedstock for fluidized-bed gasification. In a concurrent DOE program, the IGT RENUGAS process development unit (PDU) gasifier system was modified to evaluate the hot gas cleanup for the 100ton per day bagasse demonstration gasifier being built in Hawaii. One alfalfa gasification test was conducted in that program. The alfalfa was successfully reduced in size with the forage harvester with an increase in the bulk density to about 10 lbs per cubic foot and fed smoothly to the PDU gasifier at the rate of 7.7 tons per day for an 8-hour test duration. The entire alfalfa plant was gasified, including the leaves and stems.

The purpose of this test was to obtain information on cracking of the oil and tar fraction and filtering of the hot, dust-laden gases leaving the RENUGAS gasification process. Results showed that the alfalfa carbon conversion to gases and condensible liquids at the 1470°F gasifier temperature was about 98% and the product gas composition was similar to bagasse gasification with about 1/2% of very stable oil and tar fraction exiting the tar cracker and entering the hot gas filter. However, in this limited test, the test conditions were not optimized for the alfalfa according to the conditions identified in this feasibility study, but overall, the test indicates alfalfa can be successfully gasified.

Additional alfalfa gasification performance testing at the PDU or larger scale is needed to obtain detailed engineering design information. Alfalfa exhibits some variation in the amount and type of ash components between the stem and leaf fractions and also between the different growing regions around the proposed plant site. It is expected that these differences will not impact the proposed alfalfa gasification scheme, but this also needs to be evaluated with gasification tests. The gasification of alfalfa stems in a fluidized bed of dolomite is expected to control ash agglomeration tendencies as is discussed later. The alfalfa test in the PDU was conducted with about 8? Dolomite added with the alfalfa to the fluidized bed of the inert aluminum bead material used for alfalfa gasification.

## 2.1 Investigation of Alfalfa Feedstock Properties

Knowledge of the chemical and physical properties of the alfalfa feedstock are important to determine successful gasification operating conditions and feed handling operations. The important chemical properties of alfalfa include its moisture level, ultimate analysis, calorific value, and the elemental composition of the ash. Another chemical property important for gasification is char reactivity with steam. Reactivity of the biomass char carbon with steam is a measure of the slowest reaction step in the complete conversion of biomass into gases. After the very rapid devolatilization step, about 5% to 15% of the initial biomass weight remains as char

carbon. The char carbon reacts with steam in the gasifier to complete the gasification process forming additional carbon monoxide and hydrogen. The rate of this reaction determines the char residence time in the fluidized bed, hence, is related to the size of the gasifier.

The physical properties of alfalfa that are important include its particle shape, particle size distribution, and bulk density. Handling characteristics relate to biomass particle-to-particle friction and biomass particle-to-wall friction factors that are important in solids handling considerations. Also included with the physical properties is an assessment of the tendency of the ash constituents to combine and form agglomerates within the gasifier or in downstream equipment. Alkali elements such as potassium and sodium can combine with silica to form agglomerates in the gasifier. Unlike woody biomass feedstocks, which tend not to form agglomerates, alfalfa contains amounts of potassium, sodium, and silica that may form a eutectic mixture with a melting point near the expected gasification temperature. Furthermore, alkali compounds may exit the gasifier with the product gases as aerosols. These could potentially pass through the barrier filter and eventually deposit on the blades of the combustion turbine.

### 2.1.1 Discussion of Alfalfa Properties

The moisture, ultimate analysis, and heating value results for the alfalfa feedstock are presented in Table 2-1 for samples of alfalfa obtained from three counties with different soil classifications surrounding the Granite Falls plant site. The alfalfa samples received were separated into stem and leaf fractions and were analyzed individually. The alfalfa stems will be the gasification feedstock. The leaves are to be separated and processed into value-added leaf meal products.

The alfalfa compositions shown in Table 2-1 are within the expected range of most biomass feedstocks considered for gasification. The major distinctions seen in Table 2-1 are that the leaf fraction has more ash and also a higher nitrogen content than the stems. The higher nitrogen content of the leaves is related to the animal protein feed value. If the leaf fraction is to be gasified along with the stems, then the higher ash and fuel-bound nitrogen levels have to be considered in the design of the plant.

Table 2-2 presents the ash analyses of the stem and leaf fractions of alfalfa from the three county samples. The leaf fraction is up to 40% of the dried alfalfa plant. The amounts of potassium, sodium, and silicon are important. These elements can combine to form a eutectic that have a melting temperature below the normal gasification temperature. Possible combinations of the oxides of these elements are well known in coal combustion systems and in iron-making. The presence of these species is a concern in combustion boilers with an oxidizing atmosphere which favors the formation of agglomerates that foul the boiler internals. There is a concern that even at lower temperatures and in the reducing atmosphere of a fluidized-bed gasifier these agglomerates may form.

**Table 2-1. ANALYSIS OF ALFALFA FROM THREE COUNTIES NEAR THE GRANITE FALLS PLANT SITE**

| County | Olivia | | Montevideo | | Clarkfield | | Average | |
|---|---|---|---|---|---|---|---|---|
| **Moisture and Ash Analysis, wt %** | Stems | Leaves | Stems | Leaves | Stems | Leaves | Stems | Leaves |
| Moisture | 9.99 | 6.65 | 8.40 | 6.91 | 9.73 | 6.42 | 9.37 | 6.66 |
| Ash | 5.18 | 11.01 | 4.62 | 7.37 | 4.69 | 9.03 | 4.83 | 9.14 |
| **Ultimate Analysis, wt %** | | | | | | | | |
| Ash | 5.65 | 11.43 | 4.98 | 7.68 | 5.14 | 9.48 | 5.26 | 9.53 |
| Carbon | 47.15 | 47.11 | 47.47 | 48.22 | 46.96 | 47.02 | 47.19 | 47.45 |
| Hydrogen | 5.84 | 5.89 | 5.94 | 6.10 | 5.93 | 5.92 | 5.90 | 5.97 |
| Nitrogen | 2.14 | 4.76 | 2.07 | 4.80 | 1.98 | 4.53 | 2.06 | 4.70 |
| Sulfur | 0.08 | 0.29 | 0.08 | 0.28 | 0.08 | 0.21 | 0.08 | 0.26 |
| Oxygen (by diff.) | 39.14 | 30.52 | 39.46 | 32.92 | 39.91 | 32.84 | 39.5 | 32.09 |
| Total | 100.00 | 100.00 | 100.00 | 100.00 | 100.00 | 100.00 | 100.00 | 100.00 |
| **Higher Heating Value, Btu/lb (dry)** | 8030 | 8230 | 8140 | 8660 | 8080 | 8360 | 8083 | 8417 |

**Table 2-2. ELEMENTAL ASH ANALYSIS OF ALFALFA FROM THREE COUNTIES NEAR THE GRANITE FALLS PLANT SITE**

| County | Olivia | | Montevideo | | Clarkfield | | Average | |
|---|---|---|---|---|---|---|---|---|
| **Ash Element, wt % of Ash** | Stems | Leaves | Stems | Leaves | Stems | Leaves | Stems | Leaves |
| Silicon | 0.23 | 0.56 | 0.26 | 0.25 | 0.80 | 1.21 | 0.43 | 0.67 |
| Aluminum | 0.00 | 0.00 | 0.00 | 0.00 | 0.00 | 0.00 | 0.00 | 0.00 |
| Iron | 0.00 | 0.00 | 0.00 | 0.00 | 0.00 | 0.00 | 0.00 | 0.00 |
| Manganese | 0.00 | 0.00 | 0.00 | 0.00 | 0.00 | 0.00 | 0.00 | 0.00 |
| Titanium | 0.00 | 0.00 | 0.00 | 0.00 | 0.00 | 0.00 | 0.00 | 0.00 |
| Phosphorus | 0.95 | 0.76 | 1.84 | 1.13 | 1.57 | 1.93 | 1.45 | 1.27 |
| Calcium | 5.67 | 5.77 | 6.33 | 11.40 | 13.80 | 11.20 | 8.60 | 9.46 |
| Magnesium | 1.46 | 1.18 | 2.09 | 1.69 | 1.65 | 2.29 | 1.73 | 1.72 |
| Sodium | 0.56 | 0.49 | 0.70 | 0.37 | 0.32 | 0.42 | 0.53 | 0.43 |
| Potassium | 10.50 | 7.40 | 12.60 | 9.59 | 6.23 | 10.50 | 9.78 | 9.16 |
| Sulfur | 0.52 | 0.50 | 0.62 | 1.24 | 2.04 | 1.54 | 1.06 | 1.09 |

Table 2-3 presents the results of an agglomeration test used at the Institute of Gas Technology (the IGT boat test) to assess the degree of agglomeration under non-oxidizing conditions. The general test procedure involves reducing the size of the biomass to 200 mesh and then pyrolyzing the mass in a 3/8-inch by 3-inch ceramic boat under nitrogen at 1800°F followed by cooling under nitrogen to room temperature. The residue is then evaluated in terms of agglomeration strength. The mass of biomass char carbon and ash that remains in the boat after cooling shows varying degrees of agglomeration ranging from a very strong adhesive mass to completely free-flowing particles.

The boat test conducted with the alfalfa stems showed a very weakly agglomerated mass of char and ash. Just the weight of a pencil point could break up the mass and it also could not be extracted intact from the boat. It was weakly held together by the adhesion due to the ash components. The bagasse feed that was successfully gasified in the RENUGAS process development unit (PDU) at IGT showed a more strongly agglomerated mass than the alfalfa. The subsequent PDU bagasse gasification test at 1600°F (871°C) did not show any evidence of agglomeration with the agitation and mixing with the inert material of the fluidized-bed gasifier. Bagasse, however, is washed of most of the potassium and sodium elements in the sugaring process, so a precaution is recommended for the first alfalfa gasification test.

One possibility for preventing agglomeration in the gasifier would be to add small amounts of certain additives that contain magnesium, which is known to prevent the formation of the lower melting temperature agglomerates. Two such additives were tested in the boat test. Each was mixed with the samples of alfalfa stems and the alfalfa leaves, which have higher alkali ash elements. These additives were magnesium oxide and a high magnesium carbonate content dolomite. The amount of these materials that were added to the alfalfa was kept to a minimum and was calculated as a one-to-one weight ratio of the amount of potassium that was measured in the ash of the samples.

All of the boat tests conducted with these two additives showed that the char-ash residue became completely free flowing, just like dry sand. Hence, if the alfalfa fluidized-bed gasifier is designed to operate with dolomite as the fluidized-bed media, then alfalfa ash agglomeration will

**Table 2-3. RESULTS OF IGT BOAT TEST FOR ALFALFA ASH AGGLOMERATION TENDENCY**

| Sample Description | Result of Boat Test |
|---|---|
| Alfalfa Stems | Weakly agglomerated; pencil point can break up the mass |
| Stems with 4 wt % MgO added* | Completely free-flowing, even under microscope inspection |
| Stems with 8 wt % dolomite added | Completely free-flowing, even under microscope inspection |
| Leaves with 8 wt % dolomite added | Completely free-flowing, even under microscope inspection |

* MgO = lab reagent grade magnesium oxide
high magnesium carbonate dolomite (42 wt %).

**Boat Test Procedure:**

1. Alfalfa stems are ground to 200 mesh.
2. Additives are blended. The amount of magnesium oxide or a high magnesium carbonate content dolomite added was on a 1 : 1 weight ratio with the amount of potassium in the alfalfa stems.
3. The mass is pyrolyzed at 1800 °F under nitrogen in a ceramic boat.
4. The char is cooled to room temperature under nitrogen and then visually observed and described as either completely free-flowing like sand or in varying degrees of agglomeration.

be controlled and not a concern. Furthermore, conditions for alkali capture or removal from the product gas stream should be enhanced with the collection of the dolomite fines by the hot gas filter.

The first alfalfa gasification test in the PDU was conducted successfully for the 8-hour duration of the test with about 8% dolomite added with the alfalfa feed. However, the dolomite particle size was selected at about 200 mesh so that it would elutriate and not accumulate in the bed. This was necessary as the present PDU does not have a dolomite addition and removal system installed. Extended gasification testing in a 100% dolomite bed has to be done with system provisions for adding and removing dolomite bed material to obtain confidence for the process design.

Figure 2-1 shows the char reactivity or the steam-char gasification rate measured for alfalfa char and compared to chars measured previously from a similar agricultural residue, namely, corn stover, and a silvicultural residue, maple wood chips. Also shown in comparison to the three biomass species are the slower char gasification rates measured for peat and bituminous coal. The base carbon entity plotted in the figure is the weight of char carbon that remains after completion of the rapid devolatilization step minus the weight of the ash in the material.

The char reactivity measurements were made in a pressurized thermobalance operating at expected gasification conditions of 1600°F and 300 psig. The composition of the gas in the thermobalance was representative of the gasifier product gas with respect to steam and hydrogen: namely, 45% steam, 5% hydrogen, and 50% nitrogen. Hydrogen is a product of the steam-char reaction, thus the design char gasification rate is measured under similar hydrogen concentration.

As seen in the figure, the alfalfa char reacted at essentially the same rate as the corn stover and the maple chars under similar conditions. Therefore, it is expected that the alfalfa char should gasify at least at the same rate as char from wood chips that have been successfully gasified. In terms of the process design, the alfalfa throughput rate over the same cross-sectional area of the gasifier should be at least equal to that of the maple wood chips, which have been extensively tested in the PDU.

A conventional farm forage harvester-chopper (knife mill) was used to reduce the size of the alfalfa stems to determine the bulk density of the chopped alfalfa and to assess its flow characteristics for transfer between equipment. The alfalfa chopped fiber pieces had clean ends with no bristles or brooming that could impede flow in the solids feeding and handling systems. The same equipment was used previously to chop the bagasse feedstock. The bagasse that was chopped to the same size as the alfalfa produced a less dense material. Based on the successful feeding of the bagasse in the PDU gasification tests, the alfalfa is expected to feed equally well.

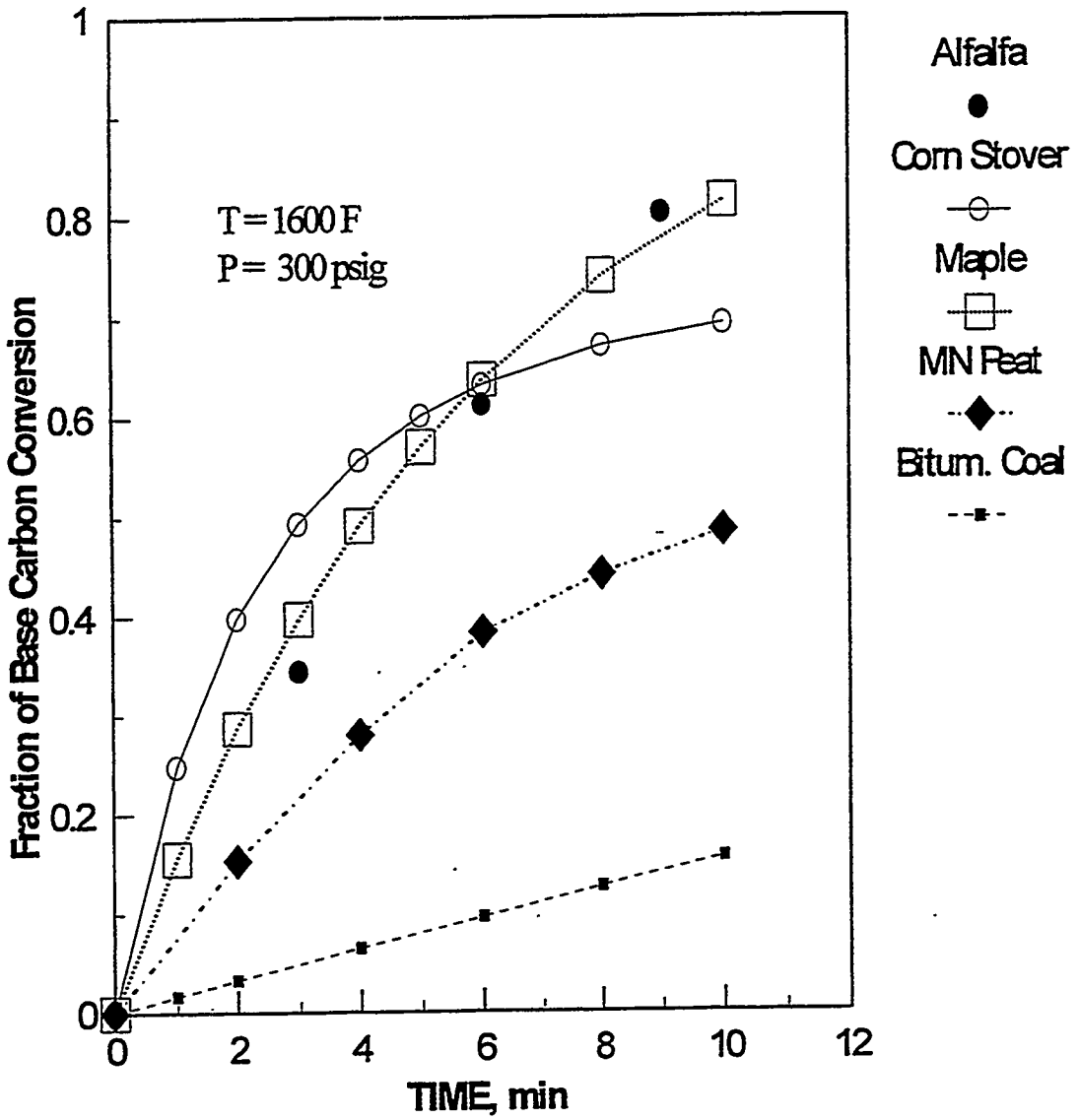


Figure 2-1. COMPARISON OF CHAR GASIFICATION RATES OF ALFALFA, CORN STOVER, MAPLE PULPWOOD, MINNESOTA PEAT, AND BITUMINOUS COAL

Physical bulk density values, which were measured after chopping with a 5/8-inch-diameter hole screen behind the standard knife cage of the harvester, are presented in Table 2-4. These are compared to the recent bagasse size reduction values. The bulk density values provide an estimate of the vessel volumes and equipment sizes needed for handling the chopped alfalfa feedstock. The bulk density values of the material were measured by filling a known volume container under free-fall conditions (untapped) and by filling while tapping the container to deaerate the loose material and produce a higher bulk density value. This is the range of bulk densities to be expected in handling and transfer operations. It is expected that the chopped alfalfa, as well as hammermilled alfalfa, will handle well in the gasification plant and will not be resistant to flow between equipment in the feed system. Hammermilling of the alfalfa stems is a possible method for size reduction; however, this was not tested. Hammermills have been used for many biomass materials, and even if it reduces the material in size without clean-cut ends, in large equipment, the material may still flow well. Large pneumatic or mechanical transport systems should not have any difficulty handling either chopped or hammermilled alfalfa.

## 2.2 Determination of Basic Gasification Process Conditions

The specification of the basic conditions for the air-blown, fluidized-bed gasification process include the gasification temperature and pressure, and to a lesser degree, the acceptable limits for feed moisture and the amount of steam addition to the fluidized bed.

The gasification temperature is the most important operating variable in terms of achieving the highest carbon conversion efficiency, namely, conversion of the feed carbon to gases along with the lowest amount of oil and tar species in the product gas. The incoming feed moisture will affect the amount of air needed to maintain a selected gasification temperature. Hence, the heating value of the product gas is affected as more air is required.

Based on data from the thermobalance test of the alfalfa char gasification rate at pressure and 1600°F, and from the previous gasification test experience in the IGT RENUGAS PDU with the Hawaiian bagasse feedstock at 1580°F, which yielded 96% feed carbon conversion, it is expected that an alfalfa gasification temperature near 1600°F should yield similar or greater feed carbon conversions. Indeed, the first alfalfa gasification test in the PDU at 1470°F achieved 98% carbon conversion indicated a very reactive char.

**Table 2-4. FEED CHOPPING RESULTS WITH ALFALFA AND COMPARISON TO HAWAIIAN BAGASSE FEEDSTOCK**

| Feedstock (as-received) | Bulk Density, lb/ft$^3$ untapped | tapped |
|---|---|---|
| Alfalfa (Olivia) | 10.0 | 13.3 |
| Bagasse (Hawaii) | 5.8 | 7.2 |

**Procedure:**
Feed size reduction test was conducted with New Holland Company forage harvester.
Harvester was modified with 5/8-inch-diameter hole screen behind chopping blades.
Bulk density calculated from weight of biomass in 0.67 cubic foot container, for case of untapped fill and for tapped fill of container.

The specification of the gasification system pressure is dictated by the requirements of the gas turbine power generation system and the sum of the pressure drops through the downstream equipment and piping. Based on these requirements the operating pressure of the air-blown alfalfa fluidized-bed gasifier was specified at 300 psig. The effect of pressure on the inherent gasification reactions or conversion efficiency is small, thus pressure is not a gasification process design variable. Generally, higher operating pressures allow greater biomass throughput for a given cross-sectional area of the fluidized bed, thus allowing for smaller diameter vessel design. Also, the quality of fluidization in the gasifier is enhanced as higher pressure creates smaller bubbles, which contribute to better mixing. Higher operating pressures, however, require more inert gas for the lockhopper operation of the alfalfa feeding system.

The feed moisture affects the amount of air input to maintain the gasification temperature. The baled alfalfa feedstock and the alfalfa dryer associated with the alfalfa processing plant prior to the gasification system will provide alfalfa stems to the gasifier at about 10% moisture. Feed moisture levels of 10% is considered low compared to other typical biomass gasification species, such as the 20%+ moisture wood chips. The lower the feed moisture, the better the overall gasification energy efficiency as less heat energy is needed in the gasifier to convert the feed moisture into superheated steam. Higher or lower moisture levels of the alflafa feedstock may be encountered at certain times, hence investigation of moisture as a parameter is necessary.

Additional steam input to the gasifier is recommended especially with the low moisture alfalfa feedstock to assure the completion of steam-char gasification reaction. A small quantity of steam, about 2 to 5 weight percent of the incoming alfalfa feed carbon, added to the lower plenum region of the gasifier provides uniformly dispersed steam across the area of the fluidized bed. This uniformly distributed steam not only assures the completion of the steam-char

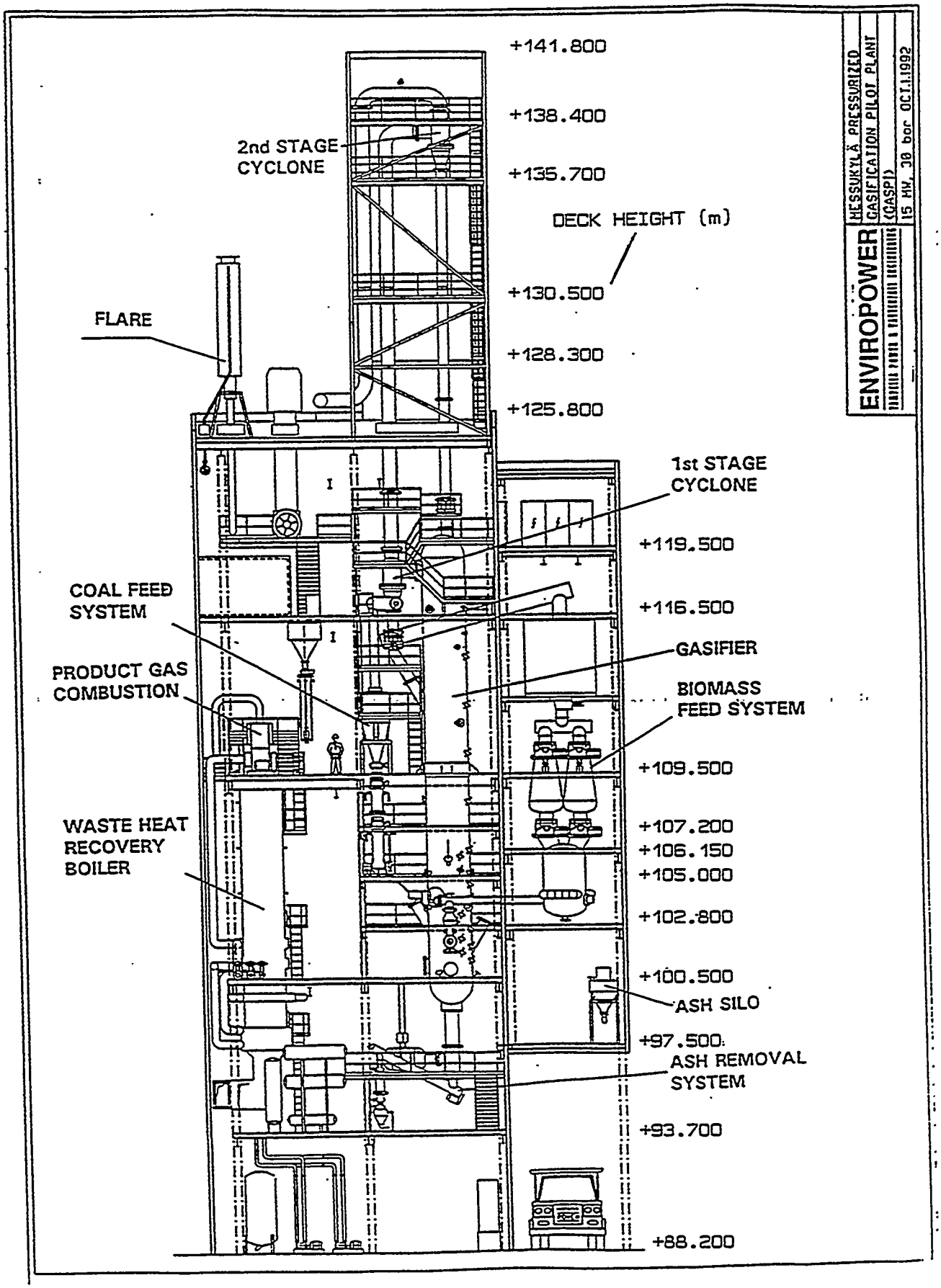


Figure 2-2. ENVIROPOWER'S GASIFICATION PILOT PLANT IN TAMPERE, FINLAND (Capacity from 10 to 17 MW (thermal) and up to 435-psig operation.)

gasification reaction but it also promotes the steam-hydroreforming reactions to help destroy heavy oil and tar species.

## 2.3 Technical Challenges

### 2.3.1 Pilot Plant Testing

The alfalfa feedstock appears to be suitable as a gasification feedstock, however, further testing is needed. Gasification tests of the alfalfa feedstock at a larger scale would provide valuable information on the gasification process parameters and would produce useful design information for the handling and feeding systems. Obtaining this test information early in the design evaluation stage would reduce design risks and costs in the overall plant. Preliminary gasification testing could be conducted in IGT's RENUGAS PDU to evaluate the gasification performance of the alfalfa stem feedstock and establish baseline operating parameters.

The detailed design of the Alfagas gasifier will be based on pilot plant operations using alfalfa stems as feed. The tests will be conducted at Enviropower's facilities in Tampere, Finland. Enviropower, Inc., is Tampella's R & D subsidiary, and the owner of IGT's licenses for the RENUGAS™ and U-GAS™ processes for Tampella.

Enviropower's pressurized fluidized-bed gasification plant is used for research, component testing, as well as for process optimization with site-specific coal and biomass fuels and mixtures of coal and biomass. The plant is rated from 10 $MW_{(th)}$ (thermal) to 17 $MW_{(th)}$ depending on the feedstock.

With the exception of a gas turbine system, all of the components of a biomass IGCC plant are included in the Tampere pilot plant. The pilot plant, as shown in Figure 2-2, includes the following:

- Fuel preparation (including crushing and drying)
- Fuel and sorbent feeding
- Gasification
- Gas cooling
- Hot gas cleanup
- Heat recovery system.

Since its commissioning in 1991, the pilot plant has processed some 2500 tons of biomass and logged 2000 hours in coal and biomass operations. The pilot plant test program for alfalfa stems will extend over a period of 4 weeks and will cover the following:

- Feed system reliability
- Bed material and ash handling characteristics
- Optimum operating conditions, air and steam-to-carbon ratios, temperature, pressure, fluidized-bed velocities, etc.
- Ash analysis
- Product gas composition and design ranges
- Off-gas contaminant concentrations
- Effectiveness of the hot gas cleanup systems on tars, alkalis, ammonia, and particulate removal
- Ash production for disposition tests.

### 2.3.2 Process Scaleup Issues

The maximum outside diameter of the top freeboard section of the proposed alfalfa gasifier vessel to be constructed of carbon steel is expected to be about 15 feet. The outside diameter would reduce to about 12 feet around the fluidized bed section. The inside diameter of the fluidized bed section of the vessel will be approximately 9 feet. The refractory thickness in all sections of the vessel would be about 1.5 feet.

Coal gasification vessels of this size have recently been designed and built in China based on IGT's UGAS coal fluidized bed gasification process (see Table 2-5). Six of these 9-foot I.D. fluidized bed gasifier vessels (with two additional spares) are beginning operation to gasify about 800 tons per day of coal. Development of the UGAS process was done at IGT using a 3-foot diameter pilot plant unit.

The proposed alfalfa gasifier with the 9-foot I. D. (1096 tons per day capacity) is following a similar development path as did the coal gasification process. IGT began development of the RENUGAS biomass gasification process in a 1-foot I.D. fluidized bed

process development unit (10 tons per day capacity) and Tampella Power Corporation has continued testing the process in a 3-foot I. D. pilot plant unit (60 tons per day capacity).

The major gasification process scaleup design issues involve (1) the process conversion chemistry and (2) the similitude of the reactants' distribution and mixing in the fluidized bed of a larger vessel. The process conversion chemistry has been studied extensively for both coal and biomass gasification. Advantageously, biomass conversion chemistry has proved to be simpler than coal conversion chemistry.

The reasons for the simpler biomass conversion chemistry compared to coal are (1) biomass has greater than 80% volatile matter compared to about 30% for coal; (2) the smaller amount of char carbon that remains after biomass devolatilization is about ten times more reactive than coal; (3) the amount of biomass ash (1/2-5%) is lower than coal (5-15%), and consequently, the char carbon is more accessible to react with steam to complete the gasification in the fluidized bed.

The scaleup design issue of similar fluidized bed behavior from smaller pilot plant sizes to larger sizes has also been studied and addressed by IGT and Tampella. These concern the process design effects of the fluidized bed geometry, its hydrodynamics and mixing, the fluidizing gas distribution, and the feed nozzle locations and uniform feed dispersion. The volume of a coal gasifier fluidized bed is composed of coal char and is designed to attain a certain volumetric residence time for the char carbon reactions. On the other hand, biomass gasifier fluidized beds are primarily composed of inert media such as sand or dolomite and designed for a specific biomass/area throughput. Hence, the fluidized bed conversion of the smaller amount of the more reactive biomass char carbon is less complex in the scaleup design.

Confidence in the scaleup design experience with coal gasification has lead to scaleup factors of 10-to-1 capacity. However, the factor for biomass fluidized bed gasification approaches about 20-to-1 because biomass gasification is less complicated to scaleup than coal gasification. The scaleup design factor from the Tampella pilot unit experience to the proposed alfalfa gasifier is within this confidence range at 18-to-1.

## Table 2-5. GASIFIER SCALE-UP DATA

| PLANT SITE | GASIFIER SIZE BED I.D. FT. | GASIFIER SIZE VESSEL O.D. FT. | HEAT INPUT MWTH | NET OUTPUT MWE | COAL FEED TPD | BIOMASS FEED TPD | STATUS |
|---|---|---|---|---|---|---|---|
| IGT - PDU (USA) | 0.7 | 1.5 | 1 | | 3 | | Operate |
| EP - Pilot (Finland) - Coal | 3 | 6 | 10 | | 30 | | Operate |
| EP - Pilot (Finland) - Biomass | 3 | 6 | 15 | | | 80 | Operate |
| SHANGHAI (China) - 8 Units | 8.5 | | 11 | Fuel Gas | 130 | | Start-Up |
| HAWAII - PICHTR (USA) | 3 | | 18 | TBD | | 100 | Start-Up |
| MEMPHIS (USA) | 12.5 | 21 | 903 | Fuel Gas | 910 | | Proposal |
| **CLEAN COAL 4 (USA)** | | | | | | | |
| Case 1: GE Frame 6 (B) | 7 | 11 | 467 | 54 | 430 | | Proposal |
| Case 2: GE Frame 6 (FA) | 8.5 | 15.5 | 821 | 105 | 742 | | Design |
| Case 3: ABB 11ND | 10.5 | 18 | 1,160 | 129/Repwr | 1,463 | | Proposal |
| VEGA (Sweden) | 5.5 | 12 | 175 | 63/Cogen | | 951 | Proposal |
| HOLLAND | 4.5 | 9.5 | 120 | 39 | | 570 | Proposal |
| EC (Denmark) | 3 | 7.5 | 21 | 8 | | 116 | Proposal |
| **SUMMA (Finland)** | | | | | | | |
| Case 1: GE Frame 6 (B) | 7 | 11 | 164 | 57/Cogen | | 1,180 | Design |
| Case 2: Westinghouse 251 | 7.5 | 14.5 | 193 | 70/Cogen | | 1,390 | Design |
| **ALFAGAS (USA)** | 7.5 | 14.5 | 196 | 75 | | 1,096 | Proposal |

# Chapter 3 FUEL SUPPLY TO THE PLANT

Receiving the alfalfa and preparation of the alfalfa stem feedstock for the gasifier are described in Volume 4. The alfalfa production and feedstock supply systems are discussed in Volume 1. The report presents the information about the following issues:

**Volume 1**

- Alfalfa harvesting arrangement
- In-field drying and storage
- Offsite storage
- Delivery to plant site

**Volume 4**

- Fuel processing/storage cycle
- As received fuel onsite storage
- Separation of leaves and stems
- Drying before the gasifier
- Fuel preparation and IGCC interfaces.

# Chapter 4 IGCC PLANT DESCRIPTION

The IGCC plant is comprised of fuel handling, gasification, gas cleanup, combustion turbine, heat recovery steam generator, steam turbine, steam condensing and cooling system, and balance-of-plant systems. The terminal points between the IGCC plant and the alfalfa processing plant are the following and belong to the IGCC plant:

- Dried alfalfa stems conveyor inlet hopper at alfalfa processing plant
- Process steam pipe at the combined-cycle building wall (steam for leaf process)
- Flue gas duct at the combined-cycle building wall (HRSG extract for drying).

## 4.1 Preliminary Plant Size Determination

The factors determining the IGCC plant size are the availability of the alfalfa feedstock, limits on transportation distance, and logistics of handling. Retrofit considerations of the existing electric generating plant in Granite Falls will also impact the alfalfa IGCC plant size. Preliminary sizing considering these factors allowed a plant size to be up to 2000 tons per day for the site. These factors are discussed as agricultural issues in Volume 1 and in the Economics and Business Plan, Volume 3. Within these preliminary size limitations, the detailed plant size was determined by the capacity of the combustion turbine and other design factors, as discussed in this report.

### 4.1.1 Combustion Turbine Selection

The Westinghouse 251B12 combustion turbine, as shown in Figure 4-1, was selected for the Alfagas plant based on several criteria. The input fuel requirement for the turbine matches the output of a single pressurized gasifier with a capacity of 1096 tons per day of alfalfa stems. The turbine combustor is adaptable for low-Btu fuel gas combustion. Satisfying the above criteria plus the fact that the 251B series combustion turbine is a tried and proven engine with over 200 units installed and never having missed a performance guarantee, it was determined that there was little risk in using it as the basis for the plant design.

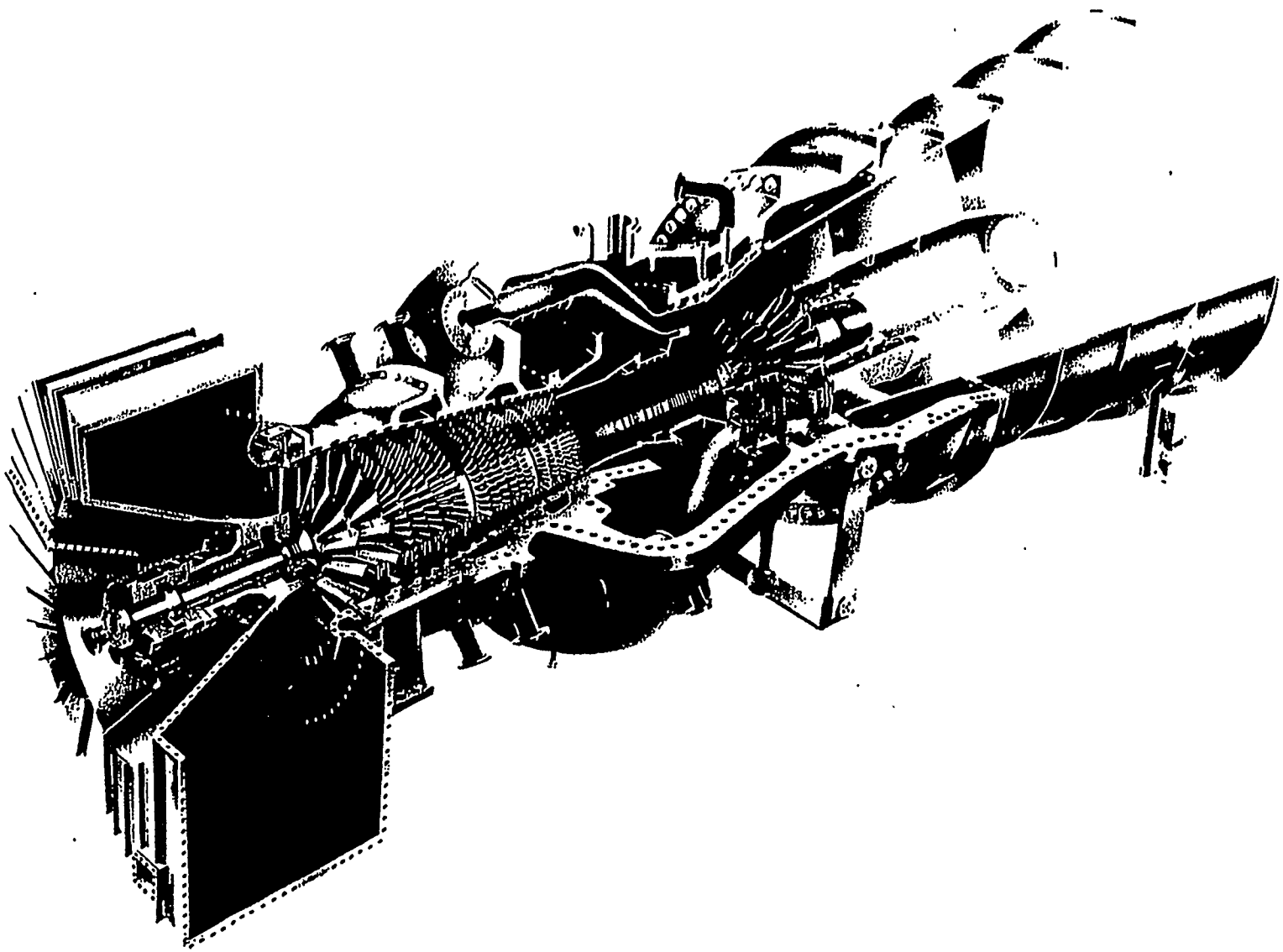

Westinghouse

Figure 4-1. WESTINGHOUSE 251B12 ECONOPAC COMBUSTION TURBINE

*Adaptability of Combustion Turbine to Low-Btu Fuel Combustion*

Westinghouse combustion turbines utilizing low heating value fuels date back to the 1950s with the conversion of the W201 (see Figure 4-2). Several models of Westinghouse combustion turbines have been modified to combust fuel with a heating value as low as 80 Btu/SCF. Two MW251 combustion turbines built by Mitsubishi Heavy Industries (a Westinghouse technical alliance partner) based on the Westinghouse 251B combustion turbine design were modified in 1989 to combust low-Btu gas from steel mill blast furnaces. DOW Chemical successfully operated a modified Westinghouse W191 combustion turbine on 80 Btu/SCF coal gas in the early 1980s and has successfully operated two modified Westinghouse 501D combustion turbines on 239 Btu/SCF coal gas for the past 6 years at their Plaquemine, Louisiana chemical plant. The combustion system designed for use with the modified 501D engines is being evaluated for use on the 251B12 for this project.

An additional alternative is the multi-annular swirl burner (MASB) combustor being developed by Westinghouse under a Department of Energy Clean Coal program. This particular combustor is being designed specifically for use with high-temperature, low-Btu synfuels that contain large amounts of fuel-bound nitrogen (FBN). These larger MASB combustors have been conceptually designed for 251B12 IGCC application.

### 4.1.2 Gasifier Capacity

The gasifier system capacity is determined by the heat consumption of the gas turbine. The gasifier island is sized to provide sufficient quantities of low-Btu biomass gas to the gas turbine/generator in order for it to generate the design electrical power output. Biomass feed rate and reagent consumption rates are determined by gasifier reaction kinetics and thermodynamic considerations. Based on the Westinghouse 251B12 gas turbine, it was determined that the gasifier will use 1096 tons per day of dried alfalfa stems at 9.4% moisture. Material balance data are provided in Section 5 of this report and are also indicated on the main process flowsheet, as Figure 5-1.

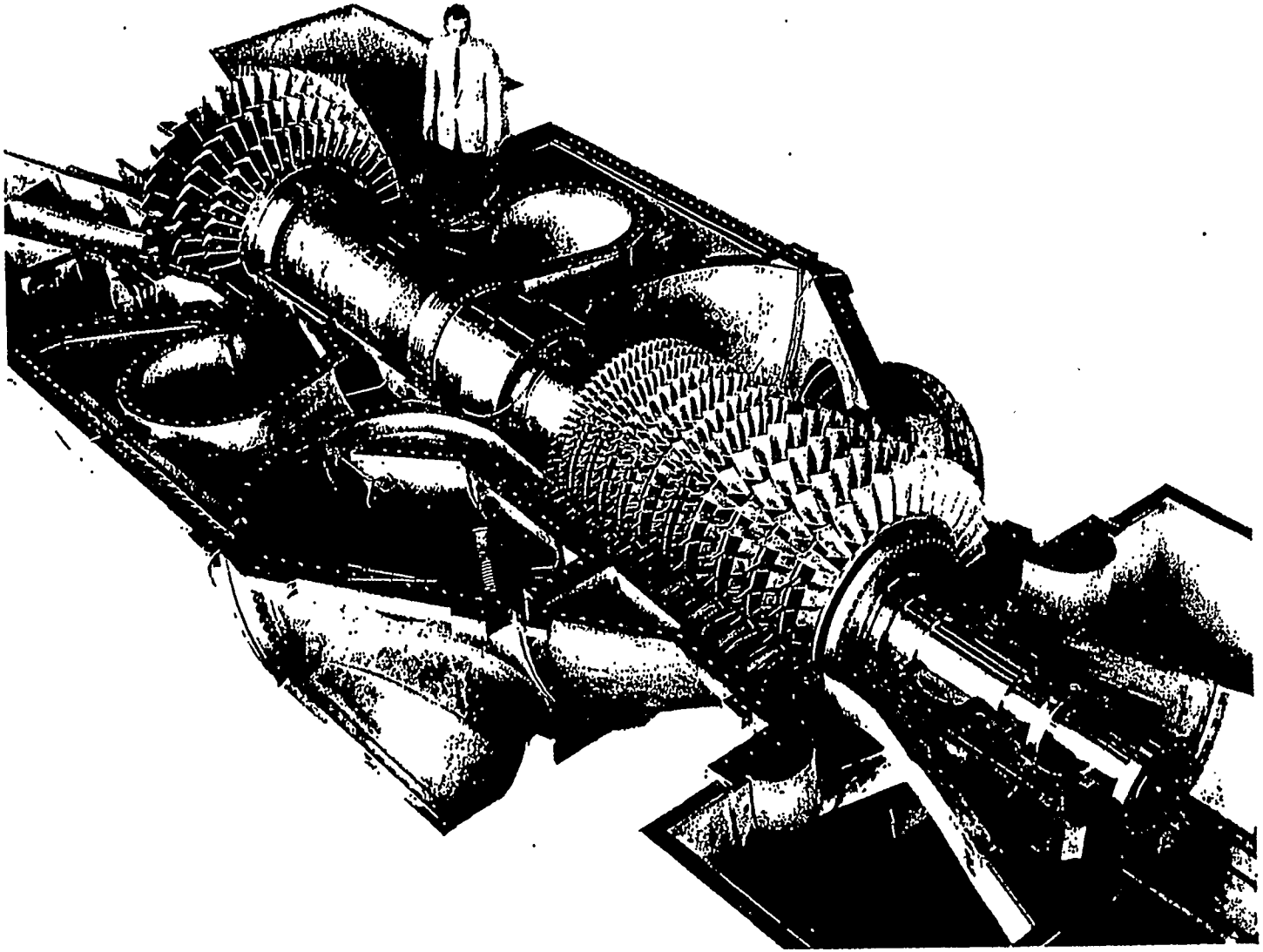

Figure 4-2. WESTINGHOUSE W201 COMBUSTION TURBINE MODIFIED FOR 90-Btu/SCF BLAST FURNACE GAS

## 4.2 General IGCC Process Description

The IGCC plant is based on Tampella's pressurized, air-blown, fluidized-bed gasification technology. Tampella Power is developing air-blown IGCC power production systems based on U-GAS and RENUGAS technologies, which were developed by IGT for solid fuels including coal, biomass, peat, and petroleum coke.

Tampella purchased the worldwide licenses for these technologies (U-GAS for coal, RENUGAS for biomass) in 1989, and has since made substantial investment of its resources and manpower to develop state-of-the-art commercial applications. A new subsidiary, Enviropower Inc., was established to pursue and demonstrate the application of this leading edge technology. Tampella built a 15-$MW_{(th)}$ (70 ton/d) pilot plant in Finland to develop the integrated operation of the gasification subsystems.

The IGCC process incorporates an air-blown, fluidized-bed gasification system with hot gas cleanup. It includes two major subsystems:

1. Gasification Plant
2. Power Plant.

### 4.2.1 Gasification Plant

The gasification plant includes the following system components: biomass receiving and feeding, gasification, and hot gas cleanup. The gasification reactions occur among the biomass, air, and steam in a hot bed of inert, partially calcined dolomite (or limestone). Dried alfalfa stems with the proper size consist is conveyed from the leaf processing plant to storage silos adjacent to the gasifier building. From the silos the fuel is delivered to a weigh hopper, located in the gasifier building. From there it is transferred to a lockhopper/screw feeder system and is fed into the fluidized-bed gasifier. A dolomite feed system is also provided to maintain the inventory of inert material in the fluidized bed. The feeding system uses inert gas for pressurization.

In the gasifier, the carbon and the volatile matter in the biomass react with air and steam at a temperature typically between 1550° and 1750°F. Bed temperatures depend on fuel moisture and the bed/freeboard air ratio. Freeboard temperature is controlled by secondary air injection. Typical operating pressure is 300 psig. The product gas contains carbon monoxide, carbon dioxide, methane, hydrogen, water vapor, and nitrogen. In addition, small amounts of vaporized light tars, ammonia, hydrogen sulfide, and other trace impurities are also present.

The fluidizing and gasifying media are mixtures of air and steam. Gasification air is extracted from the compressor of the gas turbine and fed into the gasifier through a booster compressor. Steam is extracted from the steam turbine. The fluidizing mixture is fed into the reactor through a distributor plate (a sloping grid at the bottom of the bed) to maintain fluidization. The gasification air is introduced through a central jet pipe into the middle of the fluidized bed thus

maintaining intensive internal circulation and mixing of the gasifier bed, which results in high gasification rates.

The fluidization regime in the gasifier is in between conventional bubbling bed and circulating fluidized-bed conditions: the gasifier operates as a so-called spouting bed with intensive circulation of solids from top to bottom. This feature guarantees rapid gasification reactions and long residence times of solids, thus promoting the cracking of tars to more desirable hydrocarbon compounds. Freeboard temperature is maintained by air injection which further mitigates the formation of tars and ammonia.

The gasifier incorporates a cyclone system to recycle the carry-over fines. The fines circulating through the cyclone consist of bed material, ash, and biomass char, which are returned to the lower part of the fluidized bed where the residual carbon reacts rapidly with the fresh oxidant.

The inert material, which inevitably accompanies the fuel (stones, sand, etc.) and the larger particles of the bed material itself, will sink to the bottom of the fluidized bed. These are removed through the bottom discharge system, which contains a water-cooled screw and a depressurizing lockhopper system.

Biomass gases exiting the cyclone system are cooled in the product gas cooler to 1020°F, the maximum temperature tolerated by the gas turbine control valve. The product gas cooler is a fire-tube type boiler, which generates saturated steam. This cooler is tied-in with the steam cycle plant and the steam being generated and directed to the HRSG steam drum.

Hot gas cleanup (HGCU) is a key component of the simplified IGCC process. The advantages of hot gas cleanup over conventional scrubbers include a higher overall efficiency due to utilization of the sensible heat of the gas, the elimination of process liquids and their treatment for disposal, a less complex system to operate, and a lower investment cost. The product gas is cleaned to protect the gas turbine and to comply with environmental regulations. The main contaminants in biomass gas are tars, particulate, ammonia, and alkali metals. Very low concentrations of hydrogen sulfide may also be present from the sulfur in the feed. Biomass typically has less than 0.1 weight percent sulfur, therefore, $SO_x$ emissions are usually not an environmental issue. The formation of tars is kept to an inconsequential minimum by the use of Tampella's gasification technology.

Biomass usually contains alkali metals that can form compounds, which may cause fouling and lead to high-temperature corrosion in the gas turbine. The alkali metals exit the gasifier as finely dispersed solids, liquids, and gases. As the gas stream is cooled, these materials condense, coalesce, and become attached to the particulate matter, which subsequently is captured by the hot gas filter. These contaminants include sodium and potassium chlorides and hydroxides. The concentration of the vapor phase alkalis leaving the filter is typically below 0.05 ppm, which is acceptable to the 251B12 combustion turbine.

The particulate separated from the product gas by the HGCU filter elements is periodically cleaned from the filter elements with pulses of nitrogen gas. The particulate collects in the bottom cone ash hopper of the HGCU vessel where it is then removed through a bottom

discharge system consisting of a water-cooled screw and a pressure letdown system similar to the gasifier vessel.

Fuel-bound nitrogen (FBN), primarily ammonia, in synfuels is of concern because the ammonia tends to selectively convert to $NO_x$ during combustion. Minimizing this conversion of ammonia to $NO_x$ will be an important design consideration in the selection of the 251B12 combustion system for this project.

### 4.2.2 Power Plant

The power plant includes the following system components: combustion turbine-generator, heat recovery steam generator, steam turbine-generator, and balance-of-plant equipment. Ambient air is drawn through the inlet air filtration and silencing system into the compressor element of the combustion turbine where it is compressed to approximately 14 atmospheres. The combustion turbine will be designed to fire low-Btu biogas and natural gas. Fuel is fired in the combustion section, after which the hot gases expand through the turbine element. The combustion turbine is connected to its air-cooled generator through a speed reduction gear. The combustion turbine has two functions: 1) to produce electrical power, and 2) to supply hot gases to the heat recovery steam generator (HRSG). Exhaust from the combustion turbine passes through the HRSG using its heat to generate steam. The gas is discharged into the atmosphere through the stack. Plant gaseous emissions are controlled with the use of a biogas combustion system.

The HRSG forms the link between the combustion turbine and the steam turbine. It is a horizontal gas flow type heat recovery boiler, which incorporates extended fin tube construction. This particular combined-cycle plant utilizes a three pressure non-reheat HRSG design. The high-pressure (HP), intermediate-pressure (IP), and low-pressure (LP) sections contain an economizer tube bundle, a natural circulation type evaporator tube bundle with a steam drum, and a superheater tube bundle. High-pressure and intermediate-pressure feedwater is pumped through the economizer sections of the HRSG.

The steam generated in the HRSG is supplied to the non-reheat single-cylinder, axial flow condensing steam turbine. Intermediate-pressure induction steam is mixed with the main steam flow at the appropriate pressure level in the turbine blade path. The steam turbine has an intermediate extraction to provide steam for gasifier operation. When the combustion turbine is operated on natural gas, steam injection is required for $NO_x$ control. It is taken from the HRSG high-pressure steam header upstream of the throttle valve. Steam exhausts into a water-cooled condenser located at the end of the steam turbine. The condensed steam (condensate) is pumped through the feedwater heater to the deaerator integral with the HRSG. Intermediate high-pressure steam, as well as hot flue gas, are also taken from the HRSG and exported to the adjacent leaf processing plant for process use and leaf drying, respectively.

The steam turbine is directly connected by a rigid coupling to a direct air-cooled generator that produces electrical power. Steam is condensed in a wet surface condenser. The condenser is a side entry design to accommodate the axial exhaust from the steam turbine. The

condenser is designed to allow 100% steam bypass of the steam turbine. Condensate is removed from the condenser hotwell by two of three 50% capacity condensate pumps. Pumped condensate passes through the feed water heater section of the HRSG prior to entering the deaerator. The steam cycle ultimate heat sink is provided by a mechanical draft cooling tower.

The combustion turbine generator and steam turbine generator are connected to a two-winding, oil-filled step up transformer, which increases the voltage at the generator terminals to the interconnecting voltage at the high side terminals. Included are the provisions for the automatic synchronization and protection of the combustion turbine-generator.

During start-up, the power to start the combustion turbine-generator and supply auxiliary loads is provided by the station auxiliary transformer and distribution auxiliary transformer, through back-feed from the utility system via the step-up transformer. Once running, the turbine generators provide power to the station and distribution auxiliary transformers.

An integrated distributed control system (DCS) is used to control the entire IGCC plant, as well as the alfalfa leaf processing plant. All control, monitoring, and data logging and trending will be done from the central control room utilizing operator interactive control stations. Existing operations and administrative and support facilities will be utilized where possible. The central control room will be modified to accommodate the additional equipment, providing a controlled atmosphere from which to monitor and control plant functions. Plant computers and a programming office will be located adjacent to the control room. Existing offices for plant management and administrative staff, men's and women's locker facilities, and a maintenance shop will also be utilized.

## 4.3 Integration Into Existing Facilities

### 4.3.1 Existing Plant Description

The description of the equipment at the existing plant site in Granite Falls is given in the Economics and Business Plan, Volume 3, prepared by NSP. It describes the existing boilers, turbines, fuel handling, cooling system, power transmission accessibility, ash disposal, buildings, and operating and maintenance personnel.

### 4.3.2 Site Arrangement

The Granite Falls plant site plot plan, which shows the probable new plant addition is given in Volume 3.

### 4.3.3 IGCC Plant Interfaces With Existing Plant

The IGCC plant interfaces with many sub-systems at the existing plant site in Granite Falls. A description of these sub-systems is given in Volume 3. The list of existing plant sub-systems to interface with the IGCC plant include the following:

- Demineralized water supply

- Potable water supply
- Wastewater treatment system
- Cooling water system
- Fire water system
- Plant air/instrument air system
- UPS (uninterrupted power supply) system
- Transmission line interconnection
- Buildings (lab/administration/warehouse/maintenance/etc.)
- Control room/MCC room
- Environmental monitoring system
- Plant communication system
- Access roads/railroad/etc.
- Backup fuel availability
- Data highway.

## 4.4 Integration Into the Fuel Preparation and Alfalfa Processing Plant

The integration of the IGCC plant with the alfalfa processing plant has been considered and concerned the heat requirement for the drying of the alfalfa bales that are received by the alfalfa processing plant, the heat requirement for the alfalfa leaf processing, and the delivery of the alfalfa stems to the IGCC plant. The description and definition of the integration of these systems with the IGCC plant and the alfalfa processing plant is given in the Volume 1 prepared by the University of Minnesota.

## 4.5 Description of Major IGCC Demonstration Plant Components

### 4.5.1 Dried Alfalfa Stems Onsite Storage

The provision anticipated for the onsite storage of the dried alfalfa stems from the alfalfa processing plant is described in Volume 1. Depending on the storage facility of the alfalfa processing plant, the IGCC plant may receive the stems into its day bin or silo. The size of the silo will be determined, but should be large enough to hold a supply of stems for gasification for the time to overcome any minor feed drying equipment and supply interruptions.

### 4.5.2 Fuel Feed From Onsite Storage to Gasifier Island

The feed system for the stems from the alfalfa processing plant to the gasifier feed system is part of the alfalfa processing plant and described in Volume 1.

### 4.5.3 Gasifier Pressurized Feed System

Solids, both biomass and make-up bed material, are fed into the gasifier through lockhopper pressurized feed systems. Both are delivered by their respective feed systems to the gasifier island. Surge capacity is provided by atmospheric hoppers, sized at about half an hour operating capacity. The solids are then transferred by gravity flow to the lockhopper feed systems. Each system consists of a lockhopper and a surge hopper. The system provides for three independent feed systems with a capacity of 45,600 lb/h (50% of full load) each. The feeding system components include the following:

- Weigh hopper
- Discharge screw
- Distributing screw
- Shut-off valves
- Two parallel lockhoppers
- Screw bottom with discharge screw
- Shut-off valves
- Surge hopper
- Screw bottom with discharge screw
- Shut-off valve
- Screw feeder to gasifier.

The lockhoppers are pressurized with inert gas. The biomass feed rate is controlled by a variable-speed screw feeder. The make-up bed material is fed to the gasifier through a parallel double lockhopper system.

### 4.5.4 Bottom Ash Removal System

Bottom ash exits the gasifier via gravity flow to pressurized cooling screws. Two cooling screws are provided for redundancy, each normally operating at a reduced load. The cooling screws are designed for the same pressure as the gasifier. Each screw has a nominal cooling duty of 1 MM Btu/h.

The cooling screws are provided with variable-speed drives. The screws discharge the cooled ash into a double lockhopper depressurization system. The cooled ash is conveyed pneumatically into a storage silo from which it is trucked for ultimate disposal.

### 4.5.5 Fly Ash Removal System

Fly ash is collected in the HGCU vessel ash hopper. It is periodically discharged into a pressurized screw conveyor cooler and then discharged into a depressurizing lockhopper system

very similar to the gasifier bottom ash removal system. The screw conveyor cooler will be continuously purged with a small positive flow of nitrogen, countercurrent to the ash flow to keep the product gas from entering the lockhopper system. Upon discharge from the lockhopper system the ash is conveyed pneumatically into the ash storage silo.

### 4.5.6 Fluidized-Bed Gasifier

Biomass gasification takes place in a refractory-lined carbon steel vessel. The gasifier is a vertical pressure vessel designed in accordance with ASME requirements. The gasifier vessel measures 15 feet OD and has an overall height of 80 feet.

The gasifier vessel has tapered transitions between the freeboard and the fluidized bed. Start-up burners are an integral part of the gasifier design. The lining consists of high-temperature firebrick and castable refractory, backed by insulating refractory. Sufficient insulating refractory is provided to keep the gasifier metal shell temperature at about 200°F, well below the 570°F design limit. The internals of the gasifier include proprietary designs for the fluidizing gas distribution and fly ash recycle systems.

### 4.5.7 Cyclone

Carry-over fines are separated from the biomass gas exiting the gasifier in a cyclone system. The cyclone is a refractory-lined carbon steel vessel. The design conditions for the cyclone are the same as the gasifier vessel. The collected fines are recycled back to the gasifier to maximize carbon utilization.

### 4.5.8 Gasifier Air System

The oxidant for the gasification reactions is provided by air. Air is extracted from the gas turbine air compressor, and it is further compressed by a booster compressor to overcome the pressure losses in the gasifier, the hot gas cleanup, and the gas turbine control valve.

The booster compressor, the single largest electrical power consumer in the gasifier island, is a multi-stage, centrifugal machine. The power requirement during full-load gasifier operations is 1200 kW. The booster compressor is provided as a skid-mounted package system consisting of the following components:

- Multi-stage air compressor with motor drive
- Force-feed lubrication system
- Shell and tube inter-cooler with separator and trap
- Local control panel and gauge board
- Interconnecting piping, instrumentation, and controls.

### 4.5.9 Gasification Steam

Steam for fluidization and for the gasification reactions is provided by intermediate extraction from the steam turbine.

### 4.5.10 Product Gas Cooler

Leaving the cyclone system, the biomass gases enter the product gas cooler. The gas cooler is a fire-tube boiler, integrated with the overall plant steam cycle. It generates saturated steam. Feedwater is received from the HRSG economizer discharge, and the saturated steam product is directed back to the HRSG steam drum for subsequent superheating.

The horizontal gas cooler meets ASME pressure vessel requirements. The tube sheets are designed in accordance with ASME/TEMA. Refractory lining is applied to the biomass gas inlet, outlet, and to the gas side tube sheets. The heat transfer surfaces consist of composite tubes. The inner tubes in contact with reducing biomass gases are manufactured of special alloys, such as Incoloy 800. The outer tube material conforms to the steam side parameters and is manufactured of materials such as SA-213-T11.

Tube side velocities for the dust-laden biomass gases were designed based on the following criteria:

- Velocity must be sufficiently high to ensure a self-cleaning effect to minimize fouling and solids deposition.
- Erosion of tube heating surfaces must be kept to a minimum.

The overall product gas cooler heat duty is about 52 MMBtu/h. The gas cooler is provided with an integral steam drum. The gas cooler scope of supply also includes all interconnecting piping, such as down-comers and risers, and steam drum internals including cyclones and perforated plates.

### 4.5.11 Hot Gas Cleaning System

The particulate-laden fuel gas from the gasifier is cleaned in the hot gas cleanup unit (HGCU). High-temperature particulate-laden gas enters the filter vessel and the ash collects on the outer surface of the ceramic filter elements. The clean gas passes through the filters and into the clean side of the filter elements. This produces a particulate free gas, which proceeds to the combustion turbine.

Periodically the filter elements are pulse-cleaned with a short blast of back pulse nitrogen to release the ash cake on the outer surface of the filter elements. The ash collects in the vessel cone and flows through to the ash cooler and into the pressure letdown system.

The general arrangement of the hot gas cleanup system is presented in Figure 4-3, the vessel layout drawing in Figure 4-4, and the filter assembly drawing in Figure 4-5. The discussion of the hot gas cleanup system is to be taken with reference to these figures.

Dry ash is collected at two locations; the gasifier bottom outlet nozzle and the hot gas cleanup filter bottom outlet nozzle. The hot gas cleanup outlet nozzle will be provided with an ash cooler, ash lockhopper, and appropriate data acquisition and control devices.

### *HGCU Pressure Vessel*

The HGCU vessel will be designed in conformance with the ASME Section VIII Code for unfired pressure vessels. The overall footprint can be modified to meet facility constraints and provide easy inspection and maintenance. The inlet can be either tangential or radial, and the outlet can be either vertical or horizontal; the two layouts are shown in Figures 4-4 and 4-5. The

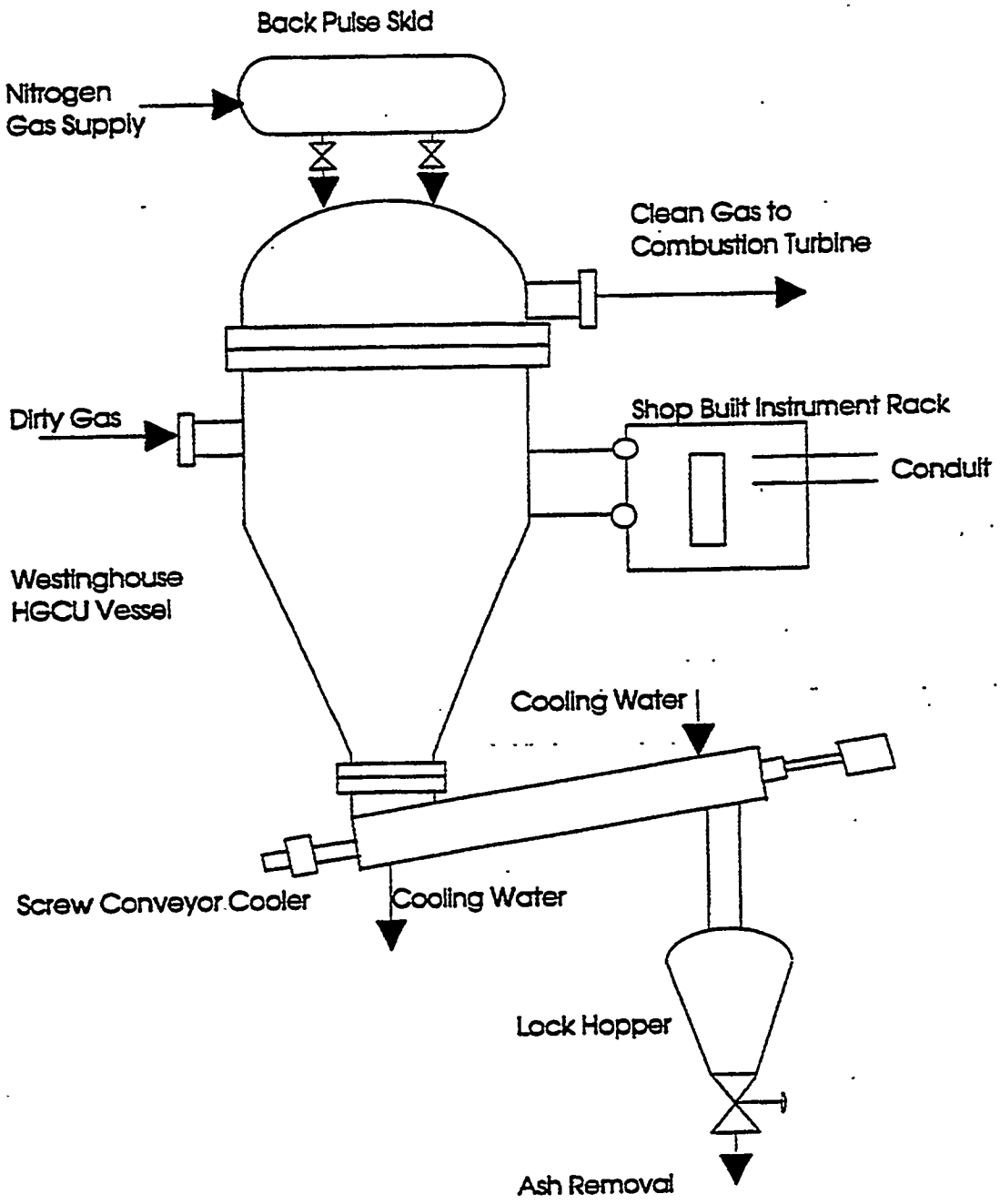


Figure 4-3. GENERAL ARRANGEMENT OF HOT GAS CLEANUP SYSTEM

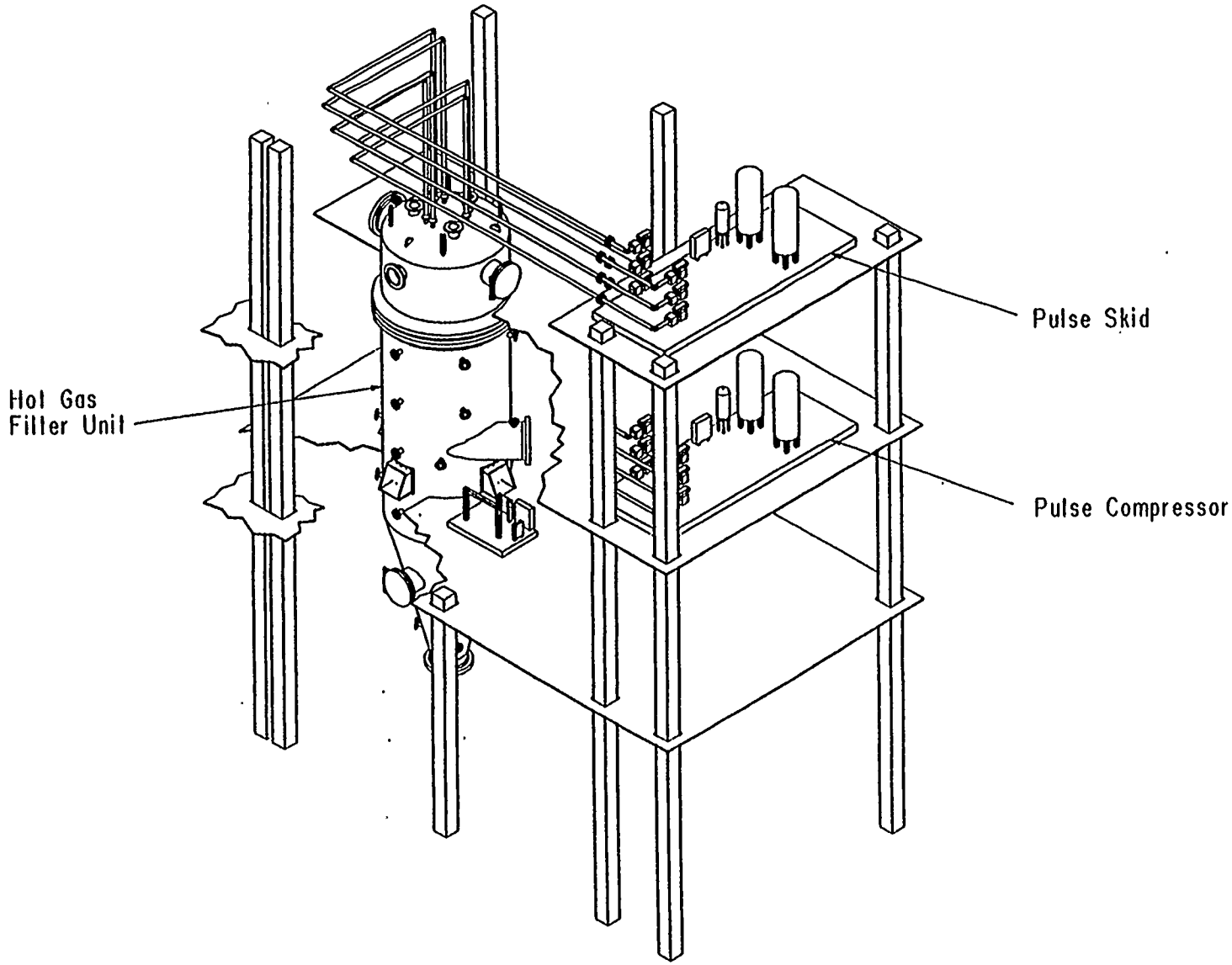


Figure 4-4. HOT GAS CLEANUP SYSTEM LAYOUT

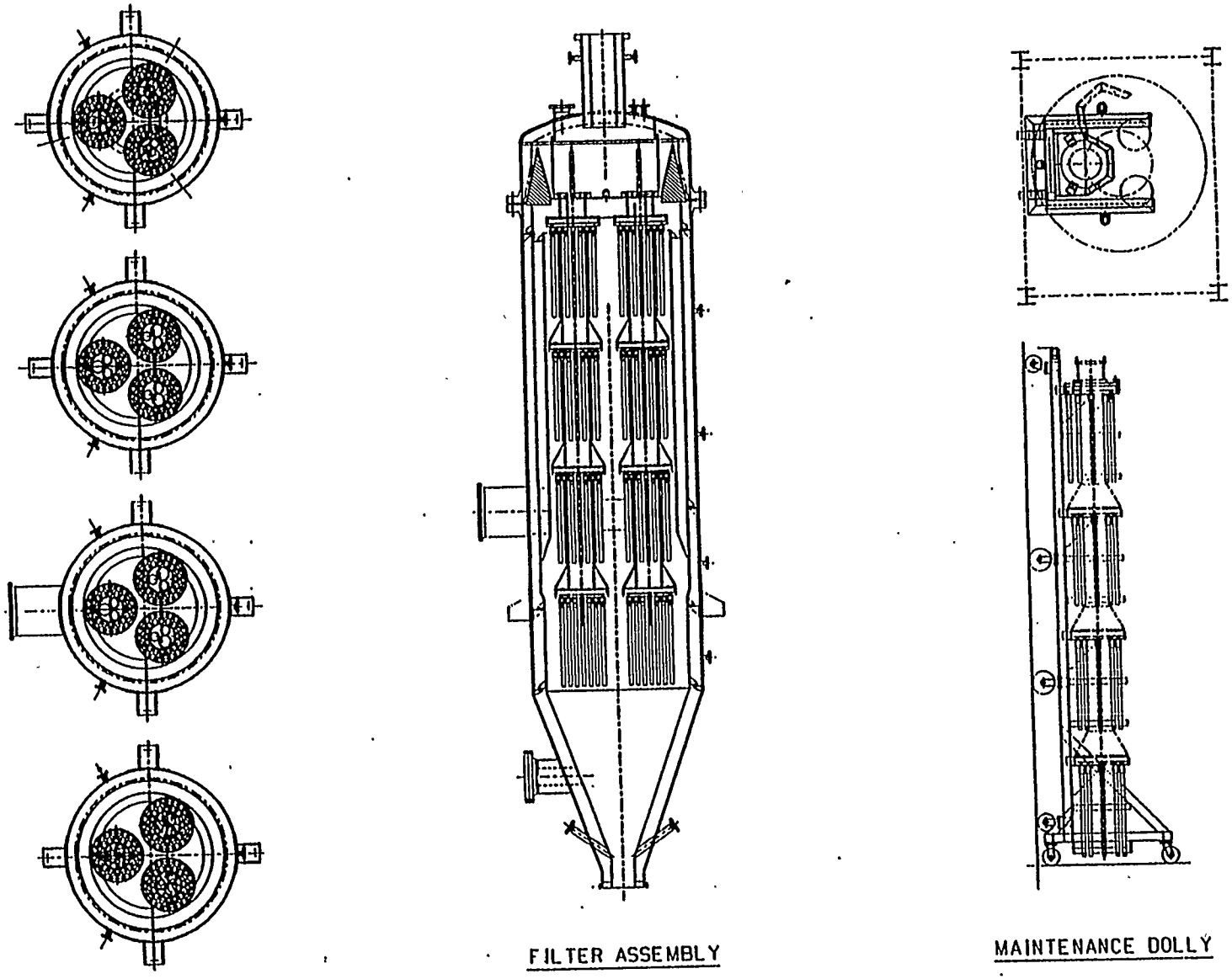


Figure 4-5. HOT GAS CLEANUP FILTER ASSEMBLY

vessel is insulated with a cast refractory. The insulation is further protected from gas impingement by an inner steel lining. The vessel is provided with manholes in the hopper and head, and boroscope inspection ports located for easy access. A boroscope can also be inserted into the pulse cleaning nozzles to examine the clean side of the filter plenums and to ascertain the integrity of the ceramic elements and dust seals.

The vessel contains a shroud to decelerate and re-direct the gas and solids for top-down flow across the filters, protecting the filter elements from direct impingement, minimizing dust cake re-entrainment, and eliminating filter breakage due to dust slugs.

### *Internal Structure and Filter Elements*

The internal structure consists of three ceramic candle clusters connected into a common tubesheet. The maintenance dolly in Figure 4-5 is shown holding one cluster assembly. The cluster assembly of four plenums is provided with separate back pulse injection to each plenum. The design provides low back pulse gas consumption and uniform filter cleaning. The 1.5-meter-long ceramic candle filters are each fitted with a thermal regenerator and failsafe device. The tubesheet is a high-alloy flat plate attached to a double cone and outer supporting ring, which does not need cooling and provides a hermetic seal between the dirty and clean sides of the process.

### *Back Pulse System*

Westinghouse has designed an efficient and reliable pulse gas delivery system. The system maximizes the cleaning action of the pulse gas and features redundant critical components to maintain full-load operation.

The back pulse system will be supplied as two preassembled modules. The first module comprises the compressors, dryers, filters, and primary accumulator tanks. The second module comprises the secondary accumulator tanks, the pulse valves, and the valve instrumentation racks for automatically sensing and controlling the back pulse intensity.

### *Instrumentation and Controls*

The instrumentation and control system (I&C) for the HGCU uses a programmable logic controller, process sensors, and diagnostics that are integrated with the distributed control system for the entire plant. The HGCU I&C system provides automated filter cleaning initiation and safeguards to eliminate events damaging to the filter and provide a high degree of filter system availability. The heart of the I&C system is a programmable logic controller which has as its main purpose the automated pulse cleaning operation of the HGCU system. The HGCU pulse cleaning sequence consists of 12 pulses, one for each of the 12 filter plenums. The I&C system also consists of pressure transmitters, thermocouples, flow meters, and fast response differential pressure transmitters, which will enable the operator to evaluate filter system performance.

### 4.5.12 Combustion Turbine System

The 251B12 ECONOPAC™, nominally rated at 50 MW, is a self-contained, electric power generating system. The combustion turbine packaged plant is used in a heat recovery configuration for the cogeneration of heat and power. The heat, provided as steam, is used in the leaf processing plant. Additional power is generated with a steam turbine in a steam bottoming cycle.

*The Econopac System*

Westinghouse's 251B12 ECONOPAC™ system features modular construction to facilitate shipment and assembly. Westinghouse will supply all of the equipment within the power block. The system is pre-assembled to the maximum extent permitted by shipping limitations. Where possible, subsystems are grouped and installed in auxiliary packages to minimize field assembly. These packages are completely assembled and wired at the factory and require only interconnections at the site.

The basic bill of material for each ECONOPAC system shows the following equipment and assemblies:

Combustion Turbine-Generator on Bedplate Assembly

- Auxiliaries:
  - Starting Package
  - Inlet Air System including Filter (2-stage pad)
  - Exhaust System
  - Electrical/Control Package
  - Compressor Water Wash System
  - Fuel-Gas/Steam-Injection Skid
  - Cooler Assemblies
  - Generator Switchgear
  - Medium-Voltage Motor Starter
  - Fire Protection.

*Combustion Turbine-Generator on Bedplate Assembly*

The combustion turbine, the main reduction gear, and the integral lubrication system are assembled on a single bedplate. The combustion turbine consists of three basic elements: axial-flow compressor, combustion system, and power turbine as shown in Figure 4-6. Incorporated into the design are such features as a horizontally split sectionalized casing, two-bearing support,

turbine air cooling system, air extraction system for gasifier operation, compensating alignment system, and axial-flow exhaust.

The combustion turbine drives from the cold compressor-end, with the turbine solidly coupled to the generator through the horizontally offset main reduction gear. The air-cooled generator and brushless exciter are equipped with integral lubricating oil and cooler piping, and necessary instrumentation.

***Low-Btu Fuel Combustion System***

The product gas from air-blown alfalfa gasification differs from traditional combustion turbine fuels in three ways: first, it has a lower heating value (approximately 15% of the value of natural gas); second, the gasifier product gas will enter the combustion turbine at 1020°F; and third, it contains significant quantities of FBN.

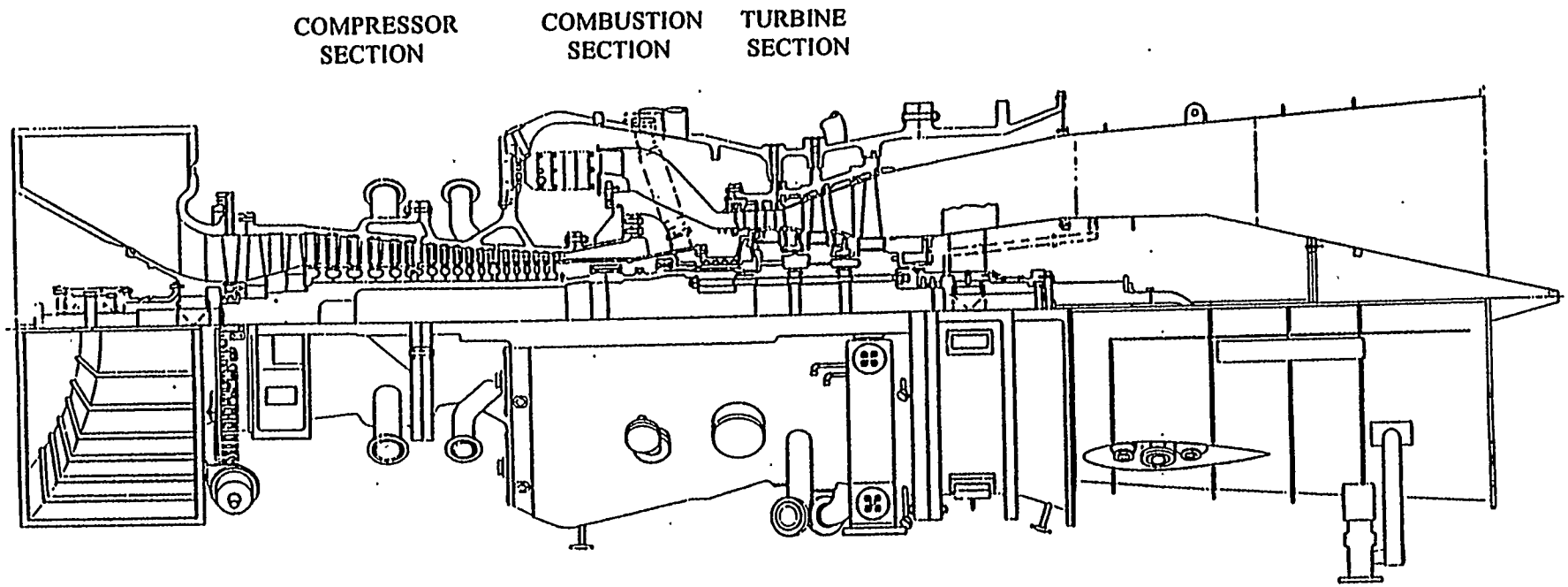


Figure 4-6. LONGITUDINAL CROSS-SECTION OF 251B12 COMBUSTION TURBINE

Certain design considerations must be made to the combustion turbine to address these fuel characteristics. The lower heating value and increased temperature of the fuel will affect the size of the combustor because of the increased volumetric flow of fuel. The fuel piping and fuel nozzle must be designed to accommodate this increased volumetric flow. Second, the FBN tends to selectively convert to $NO_x$. Therefore, the combustion system should be designed to minimize this conversion of FBN to $NO_x$.

The combustion turbine cylinder must be enlarged to accommodate the larger combustion system components. Initial conceptual designs indicate that the engine will be shipped fully assembled (with the fuel manifolds shipping separately) as shown in Figure 4-7.

The high-temperature, low-Btu fuel combustors must meet emission levels while operating on biogas, natural gas (backup fuel), or a combination of both. The leading candidate is the combustion system used on two Westinghouse 501D5 combustion turbines at the DOW Plaquemine IGCC plant. These units produce 160 $MW_e$ using 239 Btu/SCF syngas and have been in service for over 6 years. An alternate combustion system being considered is the multi-annular swirl burner as shown in Figure 4-8.

In tests to date, an 18-inch MASB has been tested with 1200°F syngas with 1600°F vitiated air and natural gas. The full-scale 18-inch MASB test combustor is shown in Figure 4-9. Westinghouse, the Department of Energy (DOE), the University of Tennessee Space Institute, and others are continuing our MASB test program to qualify its use in the DOE's Wilsonville Process Development Test Facility due to begin operation in mid-1995. A full-size MASB combustor will be installed at Wilsonville and used to operate a nominal 5-$MW_e$ combustion turbine.

Parallel programs, such as Wilsonville, will provide valuable input to this project in terms of the $NO_x$ conversions and reliability aspects of the MASB combustion system. Based on the current schedule for Wilsonville, this input will be available prior to making the final combustion system selection for the Alfagas project.

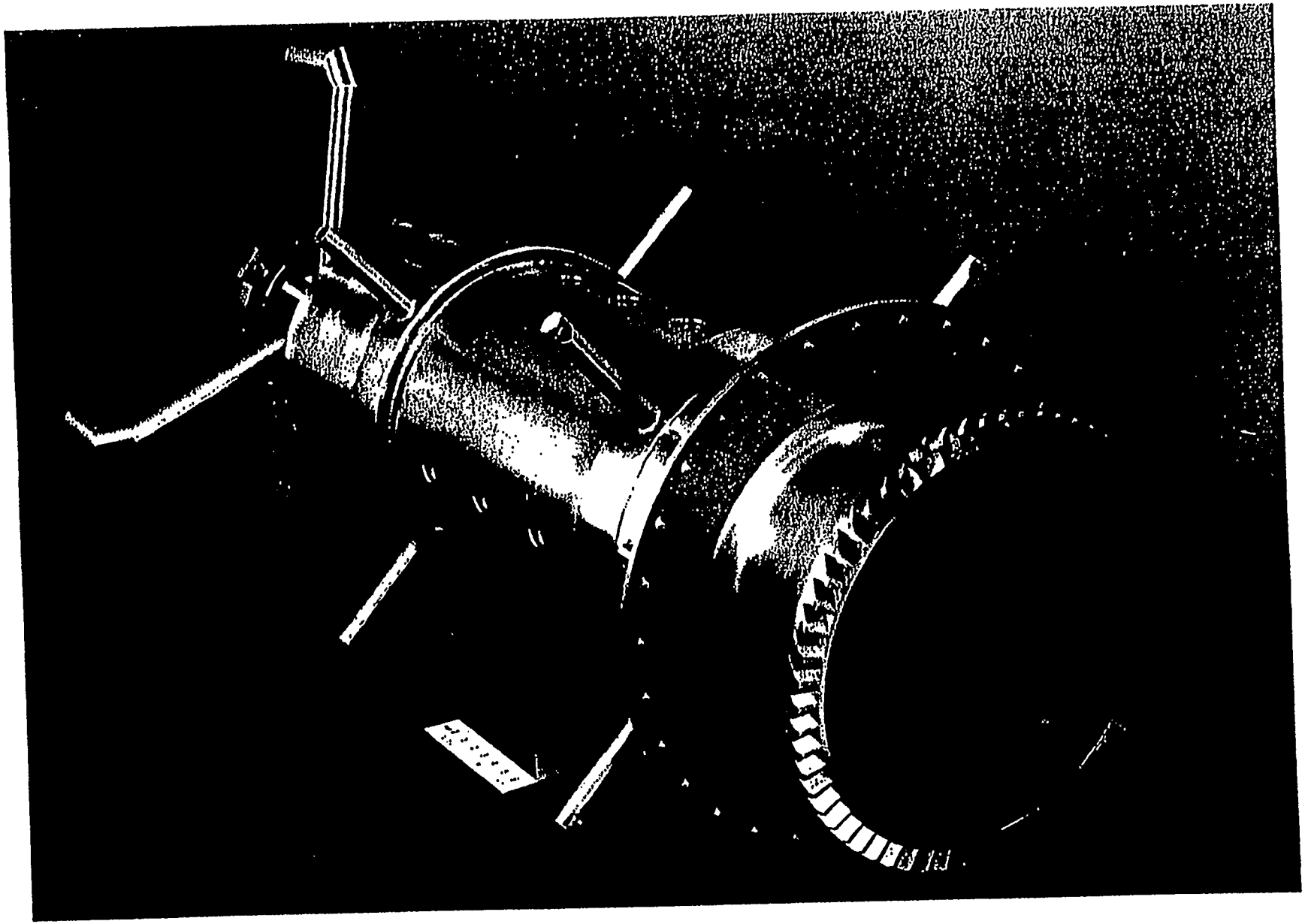

Figure 4-9. MASB 18-in. TEST COMBUSTOR

*Starting Package*

The electric-motor starting package is premounted on a bedplate and shipped as a module. The package contains all the equipment necessary to provide breakaway torque for initial rotation of the turbine generator, and the torque necessary for acceleration to self-sustaining speed.

*Inlet Air System*

A side inlet air duct directs filtered air into the compressor inlet manifold. The manifold is designed to provide an efficient flow pattern into the axial-flow compressor. A parallel baffle silencing configuration is located in the inlet system for sound attenuation.

*Exhaust System*

After expanding through the combustion turbine, the gases flow through the exhaust manifold and exhaust transition. The HRSG is connected axially at this point for heat recovery.

*Electrical/Control Package*

The electrical/control package contains equipment necessary for sequencing, control, and monitoring of the turbine and generator. This includes the Powerlogic II control system, motor control centers, generator protective relay panels, voltage regulator, pressure switch and gauge cabinet, fire protection control system, redundant air conditioners, battery, and the battery charger. The batteries are in an isolated section of the package and are readily accessible from the outside. The Westinghouse Powerlogic II is a microprocessor-based control system with distributed architecture based on the Westinghouse WDPF line of control hardware.

*Fuel-Gas/Steam Injection Skid*

The fuel-gas system provides a controlled flow of cleaned product gas to the turbine combustors. The fuel gas components are located on a skid, which is adjacent to the turbine enclosure. Components include fuel supply strainer, liquids separator, throttle valve, and overspeed trip valve.

When operating on natural gas the steam injection system provides a controlled flow of steam from the HRSG to the combustors to maintain $NO_x$ emissions to a predetermined level. The steam control valves are assembled on the fuel-gas/steam-injection skid.

*Cooler Assemblies*

The standard lubricating oil cooler is the fin-fan type using ambient air for cooling. The turbine rotor cooling air is drawn from the compressor discharge and flows through an external air-to-air cooler. The fin-fan air-to-air cooler is mounted on top of the electrical/control package.

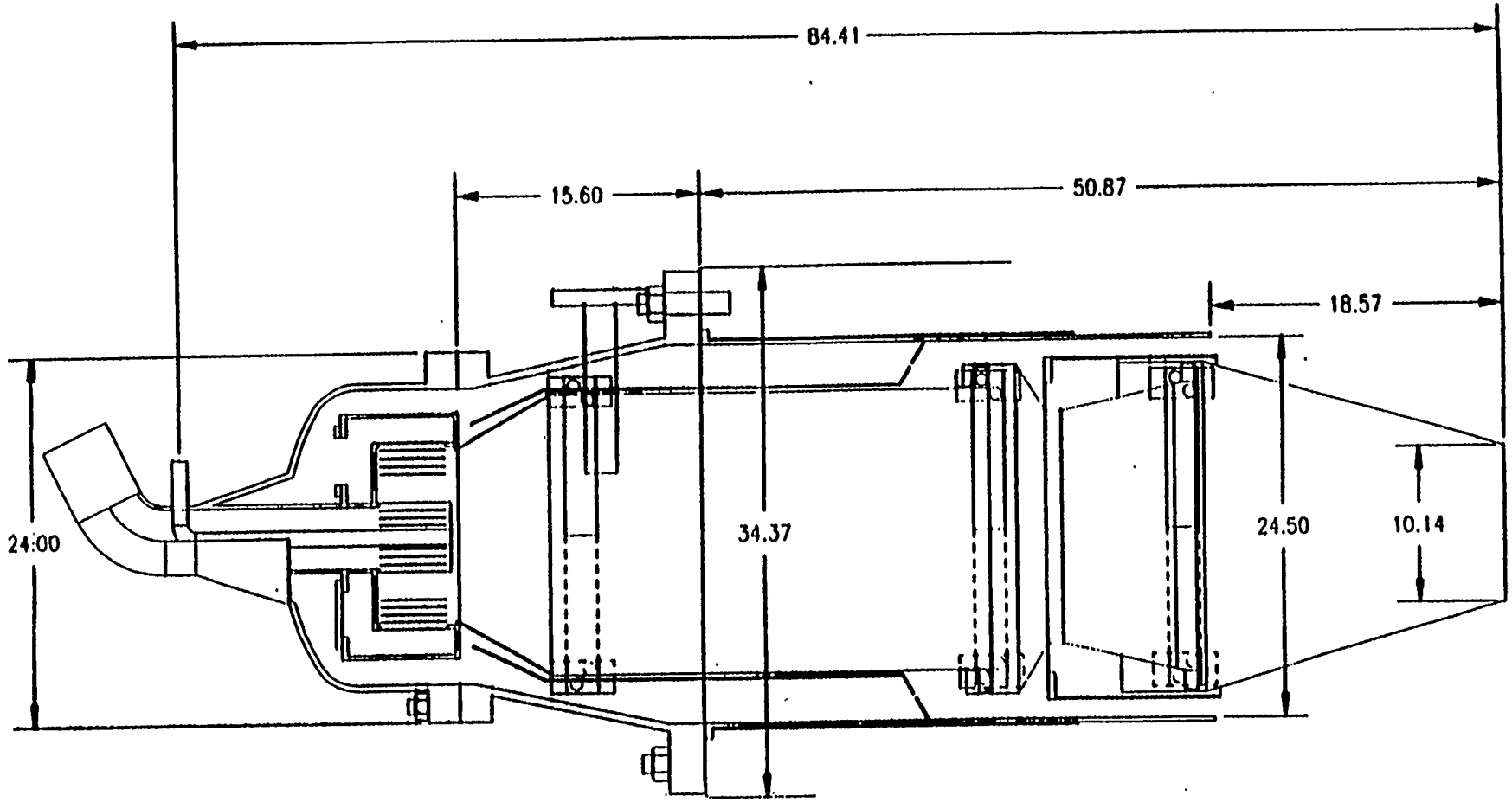


Figure 4-8. CONCEPTUAL MASB COMBUSTOR FOR 251B12 COMBUSTION TURBINE

*Generator Switchgear*

The 13.8-kV generator metalclad switchgear is the weatherproof, outdoor, aisleless type with vertical cells, and it contains a vacuum breaker. Included is generator surge protection with potential and current transformers. A 3000-A breaker is provided with the 251B12.

*Medium-Voltage Motor Starter*

The fused motor-starter controls the power to the single-speed, 4.16-kV, 1000-hp squirrel-cage induction motor used to start the combustion turbine. The starter is a metal-enclosed unit incorporating 3-pole, heavy-duty, 400-A rated vacuum contactor of drawout construction suitable for continuous operation.

*Fire Protection*

The fire protection system gives visual indication of actuation at the operator's control panel located in the central control room. The system provides total engine protection with dry chemical flooding of the turbine enclosure and the electrical/control package. A dry chemical system is also provided for the exhaust bearing area of the turbine.

### 4.5.13 Steam Turbine System

The steam turbine proposed for the Alfagas IGCC project is based on the Westinghouse Single-Case family of combined HP-LP steam turbines as shown in Figure 4-10.

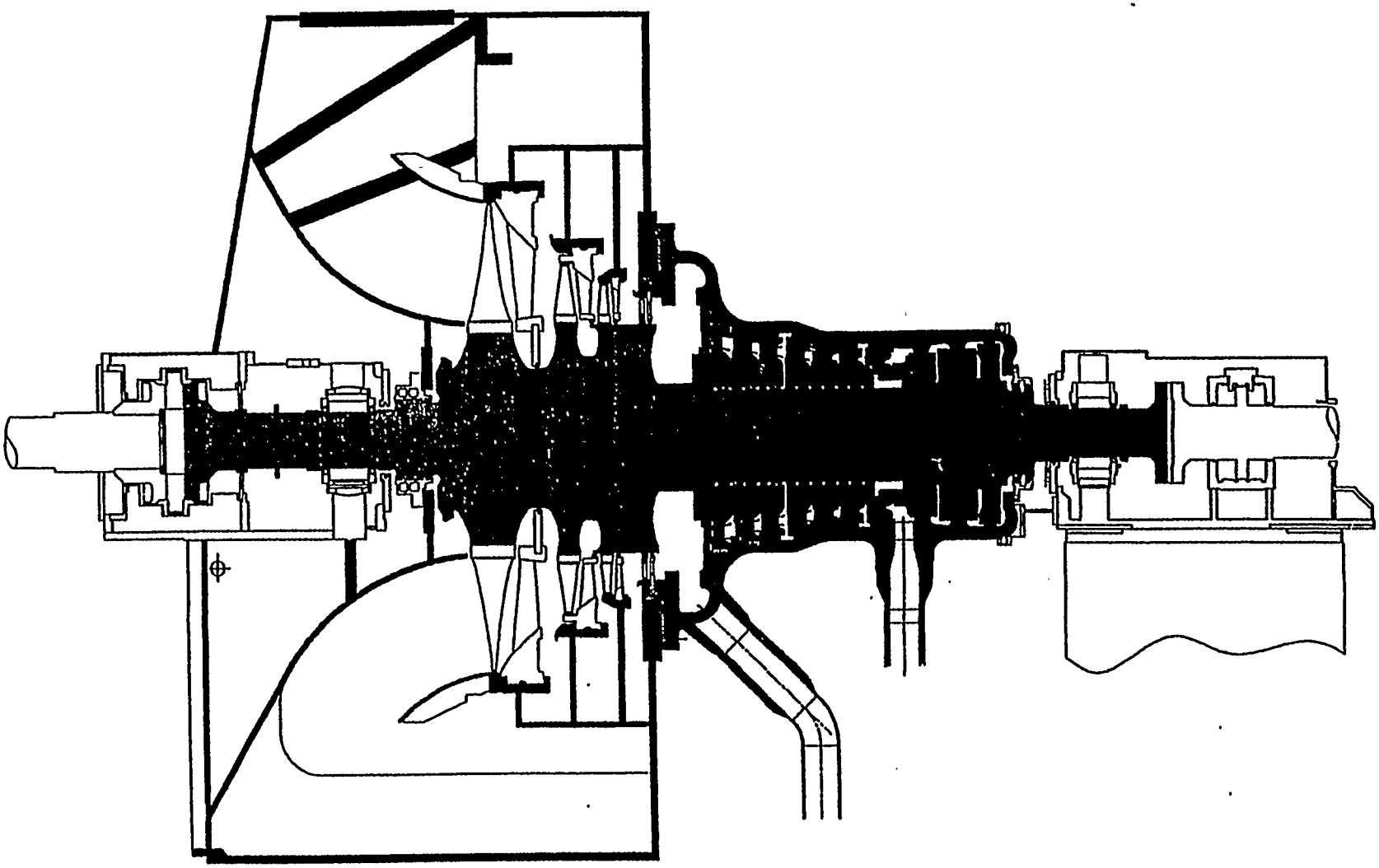

Figure 4-10. WESTINGHOUSE SINGLE-CASE NON-REHEAT STEAM TURBINE WITH DOWN EXHAUST

### *Cylinders*

The turbine cylinders are designed and supported to allow unrestricted expansion of all components during operation, and the steam chest design allows for steam extraction for the gasifier and alfalfa processing plant. The turbine cylinder is composed of two major sections, the HP section and the LP section. Both sections consist of upper and lower halves with a bolted joint at the horizontal centerline for easy access to the internal components during maintenance outages. During manufacture, or erection, the LP cylinder halves are bolted to the HP cylinder to form a single unit. The steam chest is integrally mounted in the upper half of the HP section for high reliability and reduced maintenance. Axial LP exhaust designs are available for minimized foundation heights or for use with air condensers. Each frame is also available with a down exhaust configuration for use with conventional underslung condensers.

### *Stationary Blading*

The inlet to the control stage is through a replaceable nozzle block mounted in each nozzle chamber. The nozzle blocks are designed to minimize hard particle erosion due to exfoliation from the steam generator. In the HP section, diaphragm assemblies are used to hold the nozzles. The stationary blades in the LP section are made from forged or cast alloy steel vane sections assembled into inner and outer rings that are mounted into the LP cylinder.

### *Rotor*

The rotor is machined from a no-bore fully integral alloy steel rotor forging. The no-bore rotor design produces rotor critical speeds that are well within acceptable limits and it eliminates rotor bore exams during the life of the unit.

The HP and LP blade paths have been designed for optimum efficiency, verified by cascade and field performance testing. To minimize the effect of moisture droplet erosion of the LP turbine blades, moisture collectors have been installed throughout the blade path and the last two rows of blades have stellite shields on the blade leading edges.

### *Bearings*

All main turbine bearings are forced lubrication sleeve-type journal bearings. Each bearing is split at the horizontal centerline and has babbitt bonded to the inside diameter of the carbon steel outer ring. The thrust bearing is installed in an adjustable housing, which allows the axial position of the rotor to be adjusted during maintenance outages.

### *Coupling*

The turbine rotor has an integrally forged rigid coupling that is solidly coupled to the generator.

### *Governor Pedestal*

The governor pedestal contains many of the necessary monitoring, sensing, and controlling devices for the turbine as well as various lubricating oil system components. It also contains the governor end bearing, thrust bearing, and turning gear.

### *Combined Lubricating/Control Oil System*

The combined lubricating/control oil system supplies lubrication for the turbine and generator journal bearings, thrust bearing, and turning gear and provides the hydraulic fluid for the servomotors on the main steam stop valve(s), governor valves, and induction stop valve. The system also consists of the oil reservoir, oil pumps, vapor extraction system, oil pressure regulating valve, filters, coolers, and valves.

### *Protective Valves*

A complete system of valving to protect and control the steam turbine during operation is provided. The system includes hydraulically actuated main steam stop valve(s), main steam control valve(s), induction steam stop valve, and air-operated induction control valve(s).

### *Gland Steam Seal System*

A gland steam seal system is provided to prevent air in-leakage into the low-pressure end of the turbine and to prevent high-pressure steam from leaking from the high-pressure end of the turbine.

### *Advanced MOD III Turbine Control System*

The single-case steam turbine and its auxiliaries are control by a digital electro-hydraulic turbine control system designated DEH MOD III. Like the combustion turbine Powerlogic II control system, the MOD III is a microprocessor-based control system with distributed architecture based upon the Westinghouse WDPF line of control hardware. The MOD III system provides operator interface and separate redundant Operator Automatic and protective functions including speed control, load control, feedback loop initiation, remote control, and overspeed protection. In addition an emergency trip system provides fast, accurate and effective means of protection against critical situations that might cause damage to the unit if it is not immediately taken out of service. The system continuously monitors critical turbine parameters on a multi-channel basis. If the parameters exceed the limit of safe turbine operation, all steam valves will close, tripping the unit.

### 4.5.14 Heat Recovery Steam Generator

The heat recovery steam generator is the link between the combustion turbine and steam turbine. It's performance is dependent on the combustion turbine exhaust flow rate, temperature, and composition. The HRSG is a horizontal gas flow type heat recovery boiler which incorporates extended fin tube construction. This particular combined-cycle plant utilizes a three pressure level unit with an integral feedwater heater and deaerator. The HRSG provides feedwater to the gasifier gas cooler which in turn provides high-pressure saturated steam back to the HRSG. This steam is superheated and sent to the steam turbine to generate power. In addition, the HRSG also provides the steam for $NO_x$ control in the combustion turbine when it is operated on natural gas.

Intermediate high-pressure steam, as well as hot flue gas, are also taken from the HRSG and exported to the adjacent leaf processing plant for process use and leaf drying, respectively.

### 4.5.15 Plant Control System

The biomass IGCC power plant, as well as the alfalfa leaf processing plant, will be controlled with the Westinghouse Distributed Processing Family (WDPF) of microprocessor-based equipment.

WDPF is a data highway-based system as shown in Figure 4-11. The distributed architecture is accomplished by segmentation of the control functions into functional drops (e.g., the gasifier, HGCU, combustion turbine, steam turbine, HRSG, etc.), each capable of a large array of independent functions. Communication from drop to drop is handled across the data highway. The control drops, called distributed processing units (DPUs) are microprocessor based. Critical functions such as control, alarming, and operator interfaces are implemented within redundant DPUs that have the capability of performing bumpless transfer to the backup processor. Less critical, monitoring-type functions use single (non-redundant) DPUs for maximum cost effectiveness. All functions have direct access to the data highway, providing a global data base capable of handling 32,000 different named points and updating the value and status of 16,000 points each second.

The alfagas IGCC plant would be operated from the central control room with a minimum of two operators: one operator attentive to the alfalfa gasifier and its associated/supporting equipment, and the other operator attentive to the rotating equipment, HRSG, HGCU system, and remaining balance-of-plant hardware.

A three-level plant automation logic would be integrated in the Alfagas IGCC plant control system. The three levels would be designed to maximize plant automation, minimize operator interface requirement, and enhance reliability by permitting operator action should the automatic control level degrade for any reason. With the built-in, on-line processor's self-diagnostics and the information available from the engineer's console, the WDPF has a proven track record of 99% availability.

### 4.5.16 Balance of Plant Systems

The balance of the IGCC plant systems are part of the existing power plant at the site. The description and adaption of these systems for the IGCC plant are addressed in the system economics in Volume 3. This includes the following systems:

- Water supply and treatment
- Wastewater and solids disposal
- HVAC system

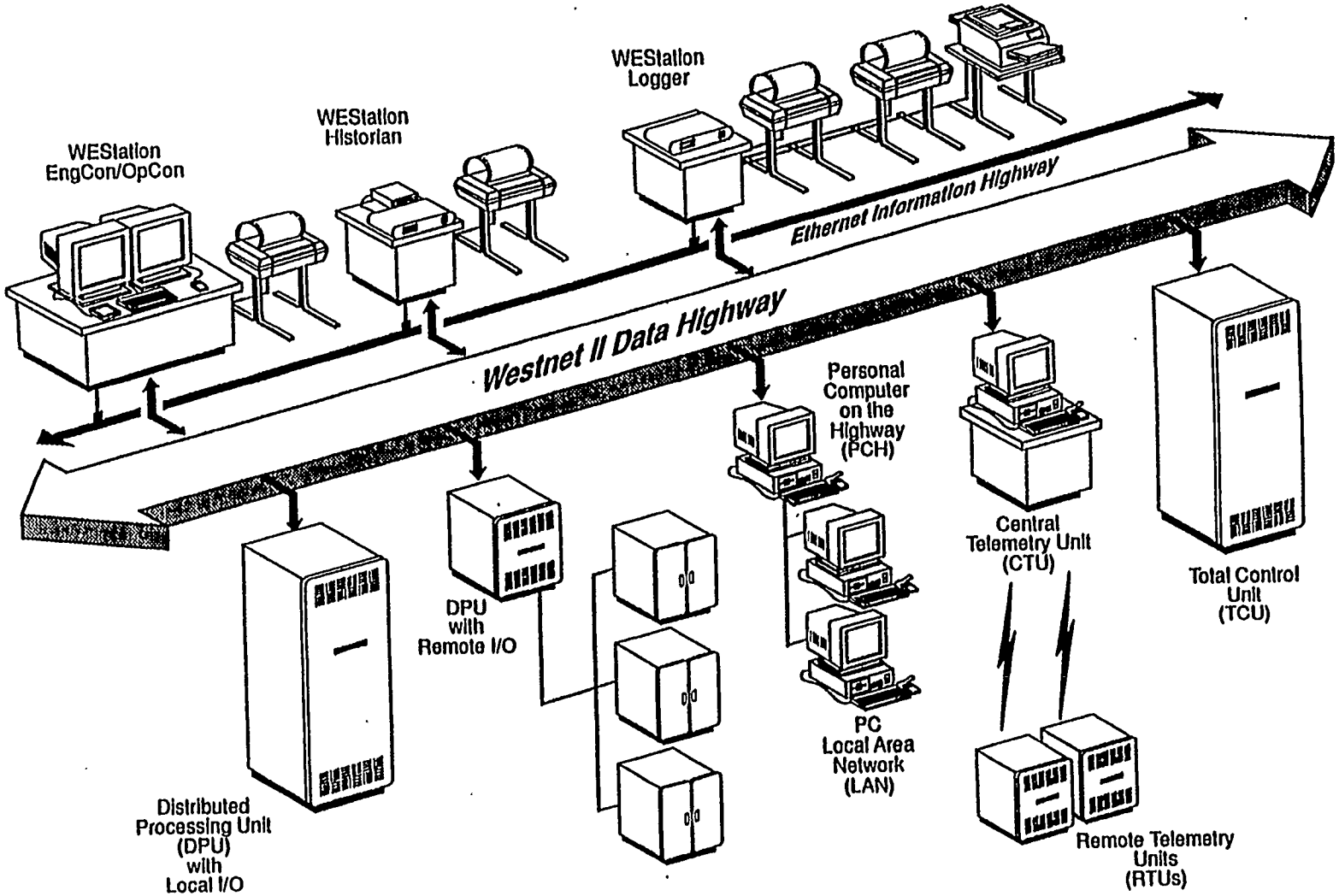


Figure 4-11. WDPF SYSTEM ARCHITECTURE

- Fire protection systems
- Electrical systems
- Civil and structural systems
- Substation and transmission system.

## 4.6 Plant Operation and Maintenance

### 4.6.1 Operation

Operating a gasifier is similar, in principle, to operating a fluidized-bed boiler. The air-to-fuel and steam-to-fuel ratios are controlled to maintain optimum gasification conditions. The fuel feed is set by the gas turbine fuel demand (basically, a fuel gas pressure control). The turndown capability is about 50%, the limits being set by the fluidized bed. Cold start-up time is approximately 24 hours, during which the gasifier and downstream vessels like the HGCU are heated up by gas burners with the off gases directed to the flare. After the inert bed material has been fed to the gasifier and heated, the biomass fuel feed is started. Normal shutdown takes approximately 8 hours. In an emergency situation, the gasifier is first cooled with inert gas, then with steam.

For a 75-MW biomass IGCC plant (gasification and power plants) the total staff consists of between 30 and 35 persons, including management, supervisors, operators, permanent maintenance staff, laboratory staff, and materials handling persons. The actual number depends on the site-specific arrangements for fuel preparation, ash handling, and whether the IGCC plant can share some functions with the existing plant. The skill level required from the gasifier operators is comparable to the skills of people operating solid fuel-fired boilers and chemical recovery boilers. The initial training for key plant operators will be at Tampella's pilot plant. A computer simulator will be used for onsite operator training. An essential part of the training will be done by having the operators participate in the construction check-out and commissioning of the plant.

### 4.6.2 Availability, Safety, and Maintenance

Tampella, and its subsidiary, Enviropower have performed extensive studies to identify potential problem areas in the gasifier operation. These include mechanical failures of components, gas leakages, and potential fires or explosions. The results of these studies have been applied in the construction of the 100-TPD pilot plant in Tampere, Finland. Subsequent experience will be incorporated into the demonstration plant design.

Based on pilot plant operations, Potential Problems Analysis (PPA), and other safety studies performed by Tampella/Enviropower for the gasifier system, unplanned downtime is assumed to decrease to 15% over the first 3 years of operation. After the design improvements, which will have been identified during the demonstration period, have been implemented, 10% to 15% unplanned downtime is assumed, which represents 36 to 55 d/yr. Adding the forced outages, the total availability of the gasification systems is expected to be 82% to 88%.

The maintenance requirements for the biomass gasification plant are similar to those of conventional solid fuel feeding and ash handling, and gas cleanup systems. Annual planned outages will last 10 to 14 days. During an outage, the gasifier refractory is inspected; the fuel feeding and ash take-out lockhopper valves are serviced; the ceramic candles in the filter are inspected and replaced, if necessary; the gas cooler is inspected for possible deposits; and all other systems are checked and serviced, as needed.

# Chapter 5 IGCC PLANT PERFORMANCE

## 5.1 Design Criteria

The IGCC plant performance is based on site ambient conditions of 59°F and 60% relative humidity. The proposed plant site elevation is 950 feet above sea level and the maximum, minumum, and average dry and wet bulb temperatures are given in Table 5-1. The gasification feedstock is alfalfa stems containing 9.4% moisture. The alfalfa stem feedstock analysis is indicated in Table 5-2 and an analysis of a typical dolomite to be used as an inert fluidized-bed material is given in Table 5-3.

## 5.2 Overall Plant Performance Summary

The IGCC plant will be operated as a base-loaded plant. Start-up power will be provided from an adjacent existing station. During the first year of operation, the gasification plant is expected to have an availability of less than 50%. The gasification plant availability will increase from the 82% to 88% range after the first 3 years of operation.

The performance characteristics for the nominal 75-MW IGCC plant have been developed by the various team members:

- Fuel supply to the plant -- NSP and U of M.
- Feedstock characterization and basic gasification process -- IGT.
- Gasification system configuration and IGCC process performance -- TPC and IGT.
- Hot gas cleanup, gas turbine, and power plant systems -- WEC.

Full-load plant performance parameters are presented in Table 5-4. The plant net output is 75.1 MW, with a net plant heat rate of 8910 Btu/kWh at full load. The full-load auxiliary power requirements are 4.3 MW. The overall plant performance on natural gas backup fuel is also given in Table 5-4 for comparison purposes.

| Table 5-1. DRY AND WET BULB TEMPERATURES AT SITE* | | |
|---|---|---|
| Annual Mean Ambient Temperature 45.76°F | | |
| | Dry Bulb Temperature, °F | Wet Bulb Temperature, °F |
| Maximum | 92 | 75 |
| Minimum | -16 | -16 |

*Based on data from Minneapolis/St. Paul Airport.

| Table 5-2. ALFALFA STEMS ANALYSIS | |
|---|---|
| Constituent | Design Basis |
| Feedstock Analysis (as fed to gasifier), wt % | |
| Carbon | 42.8 |
| Hydrogen | 5.3 |
| Nitrogen | 1.9 |
| Chlorine | 0 |
| Sulfur | 0.07 |
| Oxygen | 35.8 |
| Moisture | 9.4 |
| Ash | 4.8 |
| Ash Analysis, wt % | |
| Silicon | 0.43 |
| Phosphorus | 1.45 |
| Calcium | 8.6 |
| Magnesium | 1.73 |
| Sodium | 0.53 |
| Potassium | 9.78 |
| Sulfur | 1.06 |
| Higher Heating Value (dry basis), Btu/lb | 8,083 |
| Higher Heating Value (as fed to gasifier), Btu/lb | 7,326 |

| Table 5-3. TYPICAL DOLOMITE ANALYSIS | |
|---|---|
| Constituent | Design Basis, wt % |
| $CaCO_3$ | 55 |
| $MgCO_3$ | 42 |
| Inerts | 3 |
| Moisture | < 1 |

| Table 5-4. OVERALL PLANT PERFORMANCE | | |
|---|---|---|
| Parameter | Biomass Gas | Natural Gas |
| Dried Biomass Feed Rate, lb/h (9.4% moisture) | 91,300 | 0 |
| Gasifier Heat Input (HHV), MMBtu/h | 669 | 0 |
| Combustion turbine Firing Rate (HHV), MMBtu/h (note a) | 614 | 574 |
| Heat Export to Leaf Processing Plant | | |
| - Steam @ 4,100 lb/h, MMBtu/h | 5 | 5 |
| - Flue gas @ 310,000 lb/h, MMBtu/h | 20 | 20 |
| Combustion turbine Gross Power, kW | 50,100 | 53,300 |
| Steam Turbine Gross Power, kW | 29,300 | 19,800 |
| Gross Plant Output, kW | 79,400 | 73,100 |
| Auxiliary Power, kW | 4,310 | 2,710 |
| Net Plant Output, kW | 75,090 | 70,390 |
| Net Plant Heat Rate (HHV), Btu/kWh | 8,910 | 8,155 |
| Net Plant Efficiency (HHV), % | 38.3 | 41.9 |

(a) Biomass gas temperature 1,020°F, HHV = 155 Btu/SCF, LHV = 143 Btu/SCF

### 5.2.1 Combustion Turbine Performance

Full-load combustion turbine performance data at 59°F is shown in Table 5-5. The performance is based on burning low-Btu biomass gas from the gasifier and on extracting 123,900 lb/h of compressor air mass flow to supply the gasifier compressed air requirements. Combustion turbine power output is approximately 50 MW, and the biomass gas heat input is 614 MMBtu/h (HHV), which includes the sensible heat of the hot fuel gas. The combustion turbine performance on natural gas with steam injection for $NO_x$ control is also given in Table 5-5 for comparison purposes.

### 5.2.2 Steam Turbine Performance

The heat recovery steam generator (HRSG) is a three-pressure level unit with an integral deaerator. The HRSG provides feedwater to the gasifier gas cooler and steam to the steam turbine to generate power. It also receives high-pressure saturated steam from the gas cooler. This steam is superheated and sent to the steam turbine. The HRSG's performance is dependent on the combustion turbine exhaust flow rate, temperature, and composition. The steam turbine is of the condensing type. It exhausts to a conventional steam surface condenser at 1.25 inches $Hg_A$. The major performance parameters at the design point are listed in Table 5-6 along with the performance for natural gas operation.

## 5.3 IGCC Heat and Material Balances

Heat and material balance data for the biomass gasification and combined cycle plants are shown in the process flowsheet as Figure 5-1.

## 5.4 Plant Auxiliary Power Requirements

A breakdown of the full-load auxiliary power requirements for the IGCC plant at 59°F is shown in Table 5-7. Total auxiliary power requirements for the IGCC plant are approximately 4.3 $MW_e$. The auxiliary power requirement for the natural gas backup fuel case is 2.7 $MW_e$.

| Table 5-5. COMBUSTION TURBINE PERFORMANCE | | |
|---|---|---|
| Parameter | Biomass Gas | Natural Gas |
| Fuel Consumption (HHV), MMBtu/h (note a) | 614 | 562 |
| Combustion Turbine Gross Power, kW | 50,100 | 53,300 |
| Steam Injection, lb/h | None | 64,400 |
| Air Extraction, lb/h | 123,900 | None |
| Exhaust Flow, lb/h | 1,397,500 | 1,383,900 |
| Exhaust Temperature, °F | 973 | 970 |
| Exhaust Composition, % vol. | | |
| Oxygen | 12.8 | 12.9 |
| Water Vapor | 7.5 | 13.8 |
| Carbon Dioxide | 6.2 | 2.9 |
| Nitrogen and Argon | 73.5 | 70.4 |
| Estimated Emissions (at Gas Turbine Exhaust) | | |
| $NO_x$ (as $NO_2$ at 15% $O_2$), ppmvd | 40 | 25 |
| CO, ppmvd | 25 | 22 |
| $SO_x$ (as $SO_2$), ppmvw | 40 | 0 |

(a) Biomass gas temperature 1,020°F, HHV = 155 Btu/SCF, LHV = 143 Btu/SCF

| Table 5-6. STEAM TURBINE PERFORMANCE | | | |
|---|---|---|---|
| Parameter | Flow, lb/h | Pressure, psia | Temperature, °F |
| Biomass Gas Operation | | | |
| Throttle | 222,800 | 1,014 | 900 |
| Extraction to Gasifier | 10,057 | 396 | 697 |
| LP Admission | 4,100 | 192 | 449 |
| Exhaust to Condenser | 221,700 | 1.25" $Hg_A$ | 86 |
| Natural Gas Operation | | | |
| Throttle | 115,155 | 594.1 | 931.6 |
| Extraction to Combustion Turbine (note a) | 53,067 | 582.9 | 931.6 |
| LP Admission | 27,397 | 129.9 | 421.1 |
| Exhaust to Condenser | 153,186 | 1.25"$Hg_A$ | 86 |

(a) Desuperheated with 11,609 lb/h of feedwater @ 86°F to provide 64,676 lb/h @ 415 psia / 550°F

| Table 5-7. FULL-LOAD AUXILIARY POWER REQUIREMENTS | | |
|---|---|---|
| System | Biomass Gas, kW | Natural Gas, kW |
| Gasifier Systems | 350 | 0 |
| Hot Gas Clean-up | 50 | 0 |
| Booster Air Compressor | 1,200 | 0 |
| Combustion/Steam Turbine Generator | 270 | 270 |
| HRSG/Boiler Feed, Condensate | 780 | 780 |
| Cooling Water | 1,250 | 1,250 |
| Balance of Plant | 410 | 410 |
| Total Plant | 4,310 | 2,710 |

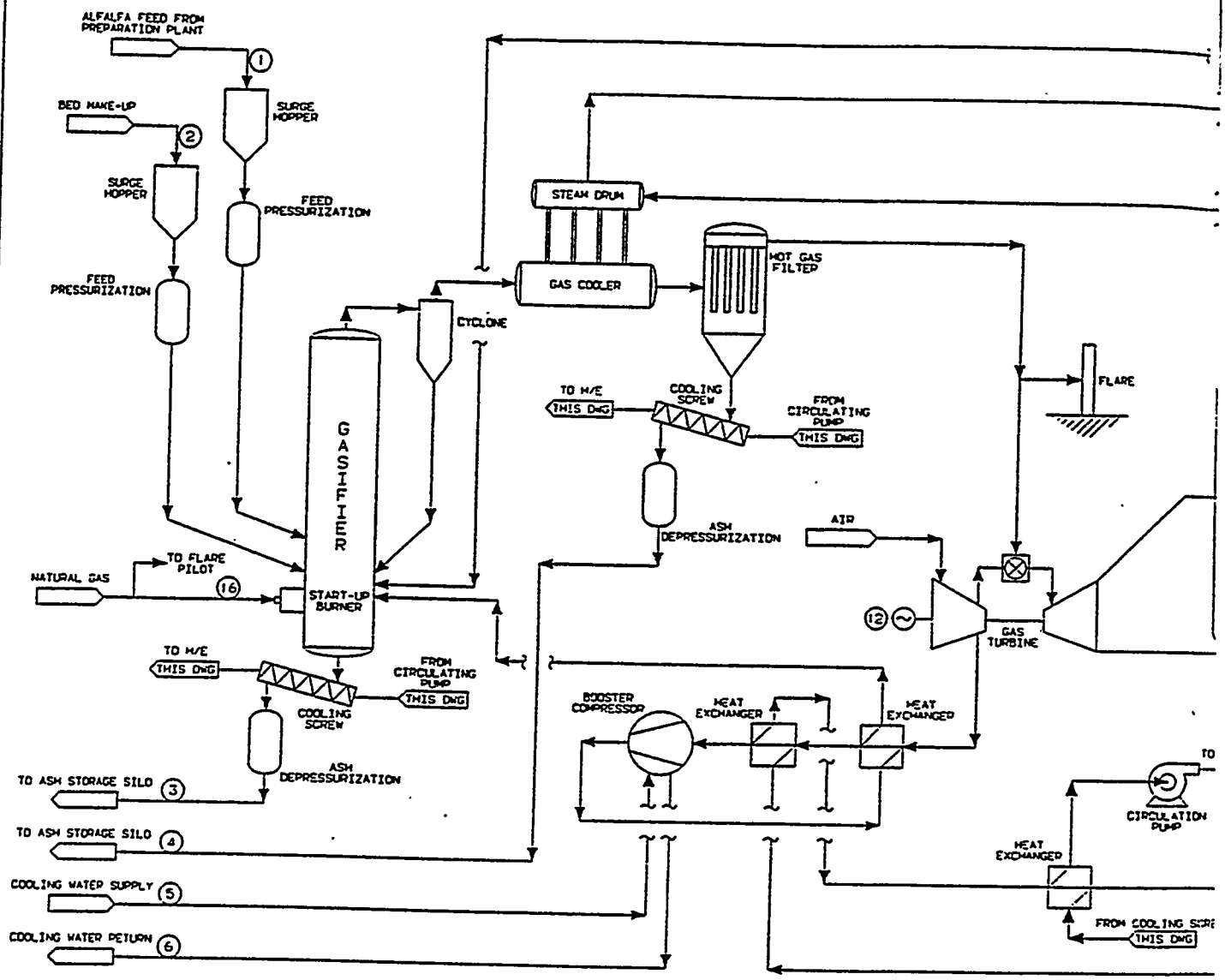


| STREAM NO. | 1 | 2 | 3 | 4 | 5 | 6 | 7 | 8 | 9 | 10 | 11 | 12 | 13 | 14 | 15 | 16 | 17 | 18 |
|---|---|---|---|---|---|---|---|---|---|---|---|---|---|---|---|---|---|---|
| SOLIDS (LBS/HR) | 91,300 | 1,800 | 4,700 | 1,800 | | | | | | | | | | | | | | |
| GASES (LBS/HR) | | | | | | | 310,000 | | | | | | | | | | | |
| WATER (GPM) | | | | | 700 | 700 | | | | | | | | 1,087,500 | 5,200 | 0 | 500 SCFM | |
| STEAM (LBS/HR) | | | | | | | | | 11,000 LB/HR | 37,600 | 37,600 | | | | | | | 1,200 LB/HR |
| TEMPERATURE (°F) | 59 | 59 | 350 | 350 | 72 | 82 | 303 | 449 | 59 | 72 | 82 | | | 260 | AMB. | | AMB. | |
| PRESSURE (PSIG) | ATM | ATM | ATM | ATM | 30 | 20 | ATM | 178 | 30 | | | | | ATM | 350 | | 90 | |
| | WTM% C=42.8 H=5.3 O=35.8 N=1.9 S=<0.1 ASH=4.8 $H_2O$=9.4 HHV 7,326 BTU/LB WET | | | | | | SAM GAS COMPOSITION AS STREAM 14 | | | | | 50.1 mole% | 29.3 mole% | VOL % $CO_2$=6.2 $O_2$=12.8 $N_2$=73.5 $H_2O$=7.5 $NO_x$=40 PPMVD @ 15% $O_2$ CO=75 PPMVD HC=20 PPMVD $SO_2$=40 PPMV | | FOR START-UP ONLY | | |

Figure 5-1. IGCC PROCI

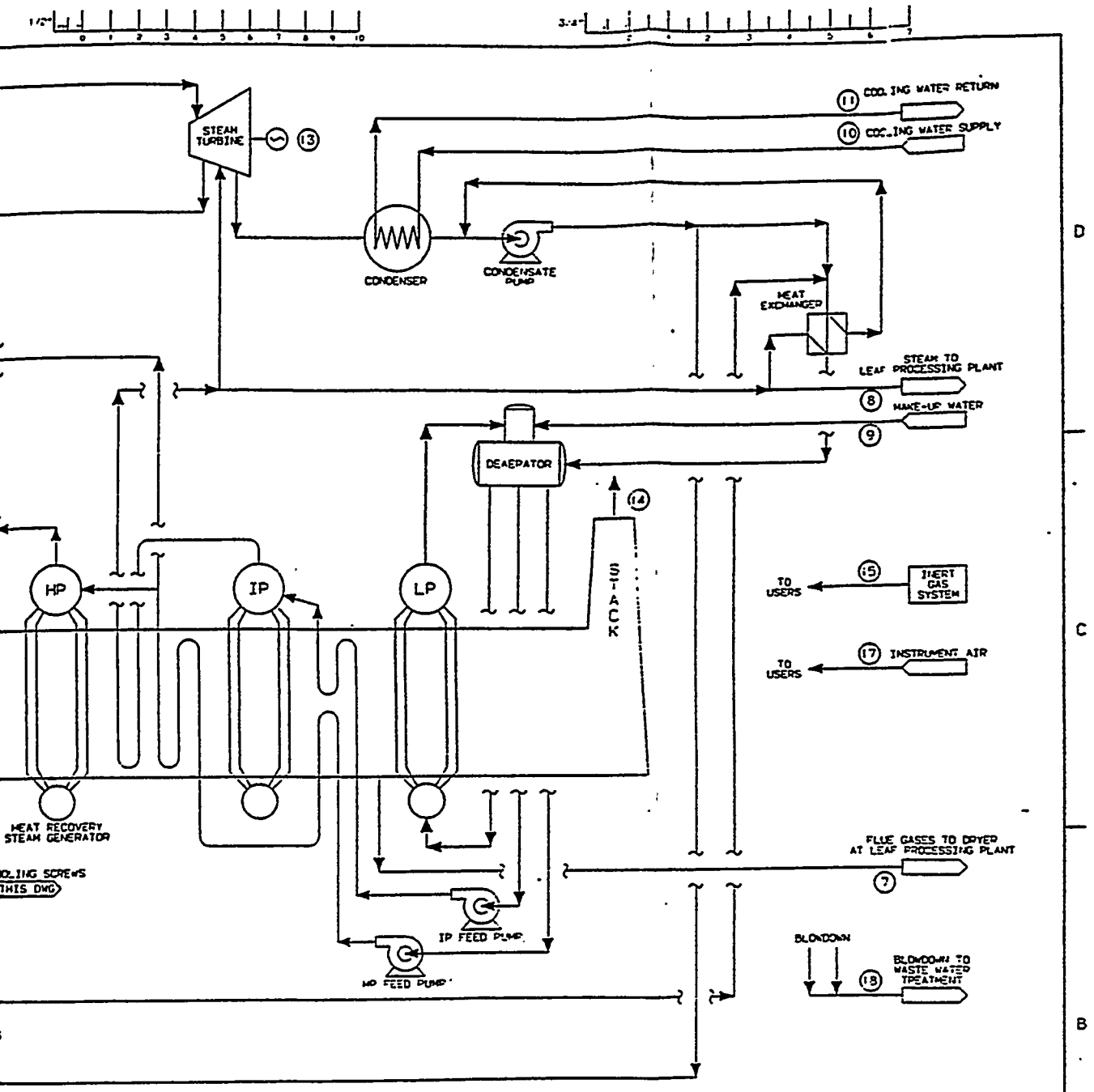


| 20 | 21 | 22 | 23 | 24 | 25 | 26 | 27 | 28 | 29 | 30 | 31 | 32 | 33 | 34 | 35 | 36 | 37 | 38 |
|---|---|---|---|---|---|---|---|---|---|---|---|---|---|---|---|---|---|---|
| | | | | | | | | | | | | | | | | | | |

PRELIMINARY DRAWINGS - NOT FOR RELEASE

SS FLOW DIAGRAM

PROJECT: ALFAGAS PROJECT

Tampella Power
WILLIAMSPORT - PENNSYLVANIA

DRAWN BY: JDF DATE: 4 18 94
CHECKED BY: DATE:
APPROVED BY:
SCALE:
MADE FROM:

BIOMASS IGCC DEMONSTRATION PROJECT FOR NORTHERN STATES POWER CO

CONTRACT NO. 18231 | DRAWING NO. NORTHSTATEPOWP | REV. 01

REVISIONS | DATE | BY | CK'D | REV. | REVISIONS | DATE | BY | CK'D

CADAM DRAWING DO NOT REVISE MANUALLY

## 5.5 Emissions Summary

Total IGCC gaseous, solids, and aqueous plant emission rates at full load are shown in Table 5-8. The expected sulfur oxide ($SO_x$ as $SO_2$) emission rate is 127 lb/h. Sulfur reduction is not provided for by the gasification plant. The biomass feedstock sulfur content is low, less than 0.1 weight percent sulfur, and $SO_x$ emissions are not an environmental concern. Some sulfur capture will take place by the gasifier bed, but this is not reflected by the $SO_x$ emissions figure.

The expected nitrogen oxide ($NO_x$ as $NO_2$) emission rate is 99 lb/h. $NO_x$ is controlled to 40 ppmvd (parts-per-million by volume on a dry gas basis) at 15% $O_2$ by a combination of fuel-bound nitrogen-to-ammonia reduction by the gasifier system and by the use of special low-Btu fuel combustion turbine combustors. High-temperature, low-Btu fuel combustor development is presently being performed by Westinghouse and is expected to be available on a commercial basis during the time frame of this project.

The bottom and fly ash product rates are 4700 lb/h and 1800 lb/h, respectively. The ash will contain biomass feedstock ash, bed material, and very small quantities of unburned carbon. The ash is expected to be an inert material suitable for return to the land. The ash characteristics will be determined from samples collected from future pilot plant tests.

Aqueous emissions from the IGCC plant are 2200 lb/h and consist of boiler blow-down. The emissions for the natural gas backup fuel is also detailed in Table 5-8.

| Table 5-8. TOTAL IGCC EMISSIONS AT FULL LOAD | | |
|---|---|---|
| Item | Biomass Gas | Natural Gas |
| Gaseous Emissions | | |
| $SO_x$ (as $SO_2$) | 127 lb/h (40 ppmvw) | 0 |
| $NO_x$ (as $NO_2$) | 99 lb/h (40 ppmvd @ 15% $O_2$) | 62 lb/h (25 ppmvd @ 15% $O_2$) |
| CO | 32 lb/h (25 ppmvd) | 28 lb/h (22 pmvd) |
| PM (10) | 6 lb/h (4 ppm weight) | 5 lb/h (3.5 ppm weight) |
| UHC | 15 lb/h (20 ppmvd) | 3 lb/h (20 ppmvd) |
| Solids Emissions | | |
| Bottom ash, lb/h | 4,700 | 0 |
| Fly ash, lb/h | 1,800 | 0 |
| Aqueous Emissions | | |
| Boiler Blowdown, lb/h | 2,200 | < 2,200 |

ppmvw = parts-per-million by volume on wet gas basis
ppmvd = parts-per-million by volume on dry gas basis
ppm weight = parts-per-million on weight basis

# Chapter 6 WARRANTY AVAILABILITY

## 6.1 Gasification System

Neither Enviropower nor Tampella is prepared to offer commercial guarantees on biomass gasification technology prior to the completion of the demonstration tests; however, Tampella is prepared to discuss specific guarantees for consideration after the tests.

## 6.2 Hot Gas Cleanup System

The hot gas cleanup unit (HGCU) included in the project is designed to perform the following functions:

- Reduce the particulate levels in the product gas to below those required for the combustion turbine
- Support the project's compliance with the permitted particulate emission level.

While meeting these goals, it is also desirable to minimize the HGCU system's impact on the project. Therefore, the following performance, operation, and maintenance standards are important considerations:

- Reasonable pressure drop across the HGCU
- Reasonable use of plant resources including —
  - Power
  - Backpulse cleaning fluid (e.g., $N_2$ or recycled product gas)
  - Reasonable filter life.

Based on our experience with similar gasification ashes, we are confident that these goals can be met for this project. However, definitive warranties for the HGCU can not be defined until the composition of the product gas and characteristics of the particulate contained in the syngas are known and evaluated.

## 6.3 Gas Turbine

This project requires that the combustion turbine operate on a low-Btu product gas that may contain large amounts of fuel-bound nitrogen. Typical performance warranties provided for combustion turbine generators using any fuel include the following:

- Power Output

- Heat Rate
- Emissions
  - Nitrogen Oxides
  - Carbon Monoxide
  - Non-methane Hydrocarbons
  - Particulate

Based on Westinghouse's experience in the development of combustion systems that operate on medium- and low-Btu syngas, we are confident that power output and heat rate warranties for the combustion turbine will be available once the composition of the fuel is confirmed and evaluated.

Warranted emissions levels are highly dependent on the composition of the syngas. For example, the $NO_x$ emission level is directly dependent on the amount of fuel-bound nitrogen in the syngas fuel. This is in addition to the amount of "thermal" $NO_x$ produced during the combustion process. The CO emission level is dependent in part on the ratio of $H_2$ to CO in the fuel. This determines the stability of the combustion process. The less stable the combustion process, the higher the CO level.

Warranted emission levels for the combustion turbine can be defined for the combustion turbine once laboratory testing of the combustion system is completed using a fuel that simulates the syngas fuel to be used in the project.

DOE/FE/12345-1
Dist Category UC-101

# Economic Development Through Biomass Systems Integration

# Sustainable Biomass Energy Production

## Volume 3

## BUSINESS PLAN

Prepared by

**Max M. DeLong, Ph.D., Principal Investigator**
**NORTHERN STATES POWER COMPANY**
**Minneapolis, Minnesota 55401**

Date Published—May 1995

**Prepared For The**
**NATIONAL RENEWABLE ENERGY LABORATORY**
**Under SUBCONTRACT No. AAC-4-13326-02**
**and**
**ELECTRIC POWER RESEARCH INSTITUTE**
**Under AGREEMENT RP-3407-21**

# TABLE OF CONTENTS VOLUME 3

## BUSINESS PLAN
## FOR
## GENERATION OF ELECTRICITY AND CO-PRODUCT PROCESSING
## FROM
## ALFALFA PRODUCED IN SOUTHWESTERN MINNESOTA

Page


**CHAPTER 1. INTRODUCTION** ..... 1
1.1 Business Plan ..... 1

**CHAPTER 2. BACKGROUND** ..... 2
2.1 Biomass Production ..... 2
2.2 Conversion Technologies ..... 3
2.3 The Study Site ..... 4
2.4 Business Venture Characteristics ..... 4

**CHAPTER 3. JOINT VENTURE DESCRIPTION** ..... 5
3.1 Organizations Involved ..... 5
3.2 Form Of The Joint Venture ..... 5

**CHAPTER 4. PRODUCT DESCRIPTION** ..... 9
4.1 Electricity Generation Characteristics ..... 9
4.2 Co-Products Characteristics ..... 10

**CHAPTER 5. PRODUCT COST ANALYSIS** ..... 12
5.1 Electricity Cost Analysis ..... 12
5.2 Co-Product Cost Analysis ..... 13

**CHAPTER 6. MARKET ANALYSIS** ..... 15
6.1 Biomass Based Electricity ..... 15
6.2 Co-Product Market ..... 16
6.3 Feedstock Availability ..... 16

**CHAPTER 7. FINANCIAL ANALYSIS** ..... 17
7.1 Basis For Capital Cost Data ..... 17
7.2 Ownership Description ..... 17
7.3 Operating And Maintenance Costs ..... 17
7.4 Base Case Description ..... 21
7.5 COE Range ..... 22
7.6 Tax Credit Influence ..... 22
7.7 Plant Life ..... 27
7.8 nth Plant ..... 27
7.9 Adequacy Of Return On Equity ..... 27

**CHAPTER 8. BUSINESS STRATEGY** ..... 28
8.1 Broad Interest In Biomass Energy ..... 28
8.2 Integrated Biomass Energy Concept ..... 28
8.3 Respond To RFP's ..... 28

8.4 Solicit Cost Share ..... 29
8.5 Unique Characteristics Of The Venture ..... 29

**CHAPTER 9. PROJECT DEVELOPMENT ..... 31**
9.1 Schedule ..... 31
9.2 Validate Key Cost And Pricing Assumptions ..... 31
9.3 Early Demonstrations Capability ..... 35
9.4 Biomass Shed Development Schedule ..... 35

## LIST of TABLES

Page

Table 5-1 Comparison of COE for Different Biomass Generation Options ..... 12
Table 5-2 Value of Alfalfa Leaf Meal in Dairy Rations ..... 13
Table 7-1 Capital Cost of Power Plant and Processing Plant ..... 18
Table 7-2 Alfagas Capital Cost Ownership Split ..... 19
Table 7-3 Operating and Maintenance Costs of Power Plant and Processing Plant ..... 20
Table 7-4 Summary of Operating and Maintenance Costs of Power Plant and Processing Plant Components ..... 21
Table 7-5 Base Case Proforma ..... 23
Table 7-6 50% Cost Share Proforma ..... 24
Table 7-7 No Cost Share Proforma ..... 25
Table 7-8 Legend for Tables 7-5, -6, -7 ..... 26
Table 7-9 Summary of Cost Share and Tax Credit Influence ..... 27

## LIST of FIGURES

Page

Figure 9-1 Project Schedule (Early Activities) ..... 32
Figure 9-2 Project Schedule (Mid-Project Activities) ..... 33
Figure 9-3 Project Schedule (Facility Construction, Biomass Supply Development) ..... 34
Figure 9-4 Schedule of Production Capacity and Resulting Inventory ..... 37

# CHAPTER 1. INTRODUCTION

## 1.1 Business Plan

This business plan provides information for the organization of a joint venture to provide a biomass production capability and operate a combined processing and power plant facility that will generate electricity and produce a protein co-product for the animal feed market. This system uses alfalfa from a dedicated feedstock supply system (DFSS); namely, biomass material planted specifically for an energy production facility. The focus of this plan is to show how two products of this renewable, or sustainable, biomass production system can be supplied reliably and priced competitively to enable a viable business entity.

This business plan will describe how these two products can be produced by organizations that have both the expertise and incentive to accomplish the goal of providing quality products. It will show how integration of alfalfa production and the processing and conversion of two constituents of the alfalfa crop can be accomplished efficiently to add value to the feedstock. This arrangement allows an alternate to continuous corn and soybean production to accomplish a sustainable crop rotation system. In addition to this environmentally progressive crop production system, it provides potential for economic development in the rural community surrounding the plant.

Public policy efforts over the past few years have focused on the desirability to use biomass for electricity generation. The rational for promoting biomass energy systems include the prediction of increased availability of land as it is released from traditional agricultural production or reserve; the desire to achieve "closed cycle" energy production to keep $CO_2$ release and capture in close phase; and to provide for economic development in the rural sector. These are logical reasons underlying specific public policy decisions, but a business venture must survive on the acceptability of investment returns and the competitiveness and a reliable supply of the venture's products. This plan will discuss how a biomass based system can meet the requirements of a viable business.

# CHAPTER 2. BACKGROUND

The biomass source, alfalfa, is a crop that is currently successfully grown in the region surrounding NSP's MN Valley Generating Plant (MN Valley) at Granite Falls, MN. Additional acreage of the crop can enhance the regions ability to continue progress towards achieving a sustainable agricultural. The knowledge base, expertise and production capability for producing the crop is well established in the region. Alfalfa is grown in many other regions of Minnesota and other parts of the US, but the feasibility study requirements could only be fulfilled with a focus on a particular site.

It is a crop that can be grown on a long term basis by group of farmers through a closed-end cooperative arrangement (i.e., co-op membership is offered only to producers). This co-op arrangement is typical of Other successful co-op arrangements in the vicinity of the MN Valley plant, are operating where value added processing and a marketing function are done on behalf of the farmer. This closed end co-op arrangement, will allow individual farmers the flexibility to transfer their production allocation ownership as the situation requires.

## 2.1 Biomass Production

The proposed cropping plan involves planting alfalfa in a seven year cycle, with 4 years of alfalfa followed by 2 years of corn and one year of soybeans. This seven year rotation (AAAACCS) is in contrast to the often used current rotation system of corn and soybeans being continuously alternated (CSCSCSC). In the spring of the first year, one cutting near the end of August. Alfalfa production continues for years two, three and four with three cuttings per year being harvested. Following that ,corn is grown two years in succession, and in the seventh year soybeans are be grown.

Farmers have indicated a strong interest in adding plant diversity in their cropping rotations to enhance preservation of the productivity of the land. The AAAACCS rotation accomplishes that objective. A perennial crop such as alfalfa will reduce soil erosion from wind and surface water runoff, as well as reduce the fertilizer, chemical and tillage inputs compared with conventional cropping systems. There are many tangible and intangible reasons for a farmer to grow more alfalfa, but it must first of all be economically attractive compared to the alternative cropping rotation systems.

Farmers have indicated a net return from the AAAACCS rotation, equivalent to the net return from a conventional CSCSCSC rotation would be necessary for them to consider a change from one rotation system to the other.

Growing alfalfa, or any other intensively managed crop on productive agricultural land, means there is a substantial cost of production which must be borne by the sale of the products produced from the feedstock. In this proposed venture two revenue streams occur; one from the sale of electricity and the other from the sale of a co-product of a mid-level, by-pass protein ingredient for animal feed. The challenge for this concept is to enter the markets competitively, and in order to do that, efficient use of the biomass material is essential.

## 2.2 Conversion Technologies

Efficient conversion technologies are proposed to extract the thermal energy from alfalfa stem material. Also, advantageous fractionation processes are used to efficiently separate protein material from fiber material to achieve high protein concentration in the leaf portion and low nitrogen, sulfur and ash concentrations in the stem portion. In addition, the use of economical low grade heat from power production section can be used to convert the crude protein in the leaf material to high value by-pass protein. Further, this is proposed to be done at an existing power plant site that has room to install the equipment, access to the existing electric transmission grid and is centrally located to the alfalfa production region to minimize the cost of transportation.

The gasification process chosen is the Institute of Gas Technology (IGT) RENUGAS" technology. This air blown, thermal gasification process has been successfully demonstrated on sugar cane bagasse, which is a physically similar biomass material to the stems of alfalfa. A 10 ton per day pilot plant using this technology is operational at IGT's Chicago facility; another 70 ton/day pilot plant is in operation at Tampella Power Corp ( TPC) facilities in Tampere Finland; and a third 100 ton per day facility is under construction on the Island of Maui, Hawaii. The gasification process is ready for commercialization.

The hot-gas-clean-up (HGCU), Lo-Btu gas combustion, and combined cycle (CT-CC) power island is a Westinghouse Electric Corp. design. The HGCU technology has been demonstrated on clean coal projects and pilot biomass gasification tests. The Lo-Btu gas combustion technology is currently being validated in pilot studies.

## 2.3 The Study Site

The site selected for the study is NSP's MN Valley Generation Plant near Granite Falls, MN. This site currently has a 50 Mwe coal burning plant with an adjacent transmission substation providing access to the transmission system. There is room on the site for the necessary additional equipment.

## 2.4 Business Venture Characteristics

The demonstration project has the potential for attracting financial support for implementation from the various participants and interested parties, because it responds to their needs. The local community can accomplish economic development with the addition of this business. From the state perspective, the increase of local commercial activity creates new tax revenues. The technology suppliers and biomass program promoters have an opportunity to demonstrate, in the near term, and to advance the commercialization prospects of their developments. The technology transfer organizations, such as EPRI, NREL and University of Minnesota have an opportunity to work with an economically viable concept.

The farmers can achieve plant diversity in their crop rotation systems with the addition of alfalfa, and they can participate in adding value to the crop to access higher value markets. The basic constituent of the co-product, namely protein, provides the possibility for the grower to pursue expanding markets for different forms of the protein, and thus improve the value added component. This can be accomplished as more processes for adding value to the alfalfa leaf material, or the basic alfalfa protein material are merged with the base facility.

Finally, the utility will have a product that is competitive and can be differentiated in the market place because of its locally grown "natural" character. There is the prospect that both investors and electric customers could share in improved benefits as higher valued markets for co-products are found for protein material that can be produced in other fractionation facilities that would be compatible with this specific facility design. These other fractionation facilities could provide separated cellulose material that can be processed by the same equipment as the stem material is in this concept. In the end, the customer for electricity will have competitively priced new renewable capacity that has a strong, environmentally protective basis.

# CHAPTER 3. JOINT VENTURE DESCRIPTION

## 3.1 Organizations Involved

A joint venture is proposed to accomplish the initial technology transfer and long term operation of facility. The joint venture arrangement brings together the necessary expertise of various parties to:

- organize, establish the design basis and finance the project;
- develop the biomass production capability and manage the permitting, design, construction and startup of the processing and power plant facility; and
- operate the facility and market the electricity and animal feed products.

The proposed team consists of a utility entity ,such as the NSP Generation arm of Northern States Power Company, as the project developer and the electric power producer and three other participant groups. A closed-end farmer owned cooperative would manage the supply of biomass, operate the co-product processing facility, and market the co-product. Another group consists of the process and equipment suppliers for those systems that require demonstration at a commercial scale. The third group consists of the University of Minnesota, the Electric Power Research Institute (EPRI), U.S. Department of Energy's National Renewable Energy Laboratory (NREL) and local, state and federal government agencies, to provide technical and/or financial assistance to accomplish the technology transfer required for the project. These team members have missions within their respective organizations that are compatible with their role in the joint venture.

Initially, the utility, the alfalfa co-op, the energy conversion technology suppliers and the organizations involved in providing cost sharing or stabilization would be associated by an agreement that reflected their contribution to the facility investment and initial operating period. Later, after the technology has been validated, and the technology transfer tasks have been accomplished, the ownership would revert to just the utility entity and the alfalfa co-op.

## 3.2 Form Of The Joint Venture

This proposed demonstration project is different than a project using technology at a more mature (nth plant) stage. The initiation of this type of project depends on a portion of the financial support from cost share to reduce the burden from first time costs. Further, active participation by the suppliers of new technology is needed to insure reliable operation of the demonstration plant before the suppliers transfer their equity position to the utility and the co-op as ultimate

owners. This project will involve a more extensive team than either traditional power plant projects or traditional agriculture product processing projects.

### 3.2.1 Multi-Member Team

Fortunately, this concept integrates at many, many levels and provides the incentives for a multi-member team to work together. The team will consist of:

- farmers as individual alfalfa producers and members of a cooperative;
- government organizations at federal, state and local levels as enablers;
- research, development and educational institutions that can assist intechnology transfer;
- technology suppliers that can furnish new and mature technologies and stay involved until these processes are functioning reliably;
- and a utility based structure that can provide project development expertise,
  - access to the existing generating and transmission infrastructure
  - and the long term outlook of providing reliable, affordable electrical energy to customers that meet their expectations of environmental quality.

From a utility view point, this project is an energy source that responds to the interests of many groups including the customers. Therefore it has to satisfy the renewable energy criteria in order for it to be marketed as a product with differentiation from other sources. This differentiation may be in the form of its renewable character and from its local or in-state nature. It does need to be competitive with other renewable baseload sources, and at some level of planning it must be competitive with traditional fueled technologies with consideration given to environmental externalities.

### 3.2.2 Project Phases

The project would be conducted in three phases:

PHASE I Team organization to respond to request for proposals for electrical capacity and cost-share/technology-transfer assistance.

PHASE II Establish design basis information, finalize facility design and apply for facility permits.

PHASE III Construct facilities, develop the biomass shed and begin operation

Initially, the joint venture agreement would consist of an arrangement between an alfalfa co-op, the technology suppliers, and a utility entity who each own defined pieces of equipment placed on a common site, with the equipment of each party being designed to work together. Each party would also have designated responsibilities for operating and maintaining specified pieces of equipment. Each party would have procurement and/or marketing responsibilities for specific

items such as feedstock, consumable materials or end products. The owners would share the net income from the venture in the same proportion as ownership ( a 50% utility-50% co-op split has been assumed).

### 3.2.3 Ownership And Operation Arrangement

The co-op would have the responsibility to procure the necessary tonnage of baled alfalfa, separate it into two fractions (stems and leaf material) to provide the 1000 tons per day of stems needed for the gasifier.

The alfalfa co-op would own the alfalfa processing plant and the gasifier. In addition, the co-op would own the necessary equipment to process the raw leaf meal into higher valued rumen by-pass protein. It would also market, sell, and distribute the leaf meal to regional, national or international markets.

The utility entity would own the hot-gas-cleanup system (HGCU), the power island and the balance of plant equipment. The hot gas produced by the co-op would be piped to the HGCU and combustion turbine-combined cycle power island.

The utility would have the operating and maintenance responsibility for the power island and the maintenance responsibility for the processing plant. The utility would have responsibility to furnish the land for the facilities, and secure a power sales agreement for the baseload electricity capacity that the plant provides.

This organizational structure provides a way for the project to match the expertise and responsibility of the joint venture partners where it is in the best interest of the joint venture.

This organizational arrangement will allow capture of IRS Sec 29 tax credits, if available for the co-op for the production of biomass gas. The Sec. 29 credits are scheduled to end in 1996, but Congress could extend them. The utility may be able to use the IRS Sec 42 credits from the Energy Policy Act of 1992 for the generation of electricity from a closed cycle fuel arrangement. The Sec 42 credits are scheduled to end in 1999, but Congress would need to make them applicable to projects underway or extend the use of these credits.

### 3.2.4 Alternate Fuels

One of the differences of the power generation facility from a traditional fossil fueled facility is the necessity to accommodate the weather influence on the fuel supply . The responsibility for

supplying a given quantity of stem material would rest with the co-op. But in the event of a short-fall of stem material from weather conditions, back-up fuel of natural gas could be used. The CT-CC power island can accommodate any combination of Lo-Btu gas and natural gas. The difference in price of stem vs. natural gas fuel would need to be defined in advance. Conceivably, a short fall of alfalfa feedstock could raise the value of leaf meal to overcome any increase in cost from natural gas purchase.

The value of the processed leaf material leaf meal may vary more at different times of a year when there is a short fall of alfalfa. When this occurs the joint venture might use natural gas to optimize the return to the business by choosing to use natural gas when it was low priced.

# CHAPTER 4. PRODUCT DESCRIPTION

## 4.1 Electricity Generation Characteristics

### 4.1.1 Base Load Electricity Generation

Electricity generation from this biomass fueled integrated gasification combined cycle plant will be base load. The plan of feedstock supply and stem material production has been planned to be a continuos process to provide a reliable supply of the necessary quantities.

About 40% of the feedstock for the plant will be transferred directly to the plant soon after baling. The other 60% of the feedstock will be stored at the regional storage sites within a 50 mile radius of the plant for use at the plant at some other time during the year. Selection criteria for these storage sites will include accessibility to enable feedstock to be delivered to the plant on a six day a week basis. This steady supply will support the base load nature of this plant. Processing of feedstock will take place 24 hours a day, six days a week, and there will be 4 days of stem material storage on site to provide a steady uninterrupted flow to the gasifier.

### 4.1.2 Closed Loop Biomass Energy

Electricity generated from biomass provides the utility an opportunity to communicate with customers about the source of energy and the intangible value that environmentally progressive projects like this bring. Product differentiation is not always used with traditional power plant fuels, but in this case it can be a very valuable addition to a utility public information program.

The fuel source, namely alfalfa stem material, is closed loop because the $CO_2$ is removed from the atmosphere during photosynthesis processes of plant growth, and later in the process of gasification and combustion, is released back to the atmosphere. From the view of current atmospheric $CO_2$ inventory, this closed loop path of $CO_2$ differentiates this electrical energy production source from fossil energy production.

At some level of planning, this closed-loop characteristic may have an externality value of COE at 8-18 $/MWhr (coal baseload cost plus this amount would be the cost at which a renewable option would be considered comparable), according to the Minnesota Public Utility Commission (Order Establishing Interim Environmental Cost Values, Docket No. E-999/CI-939583, MN PUC).

### 4.1.3 Efficient Use Of Biomass Material

Alfalfa stem material used in this project must support a portion of the production cost of alfalfa. Producing biomass material in an intensively managed operation results in material that has a significant production cost. Therefore, it becomes important from an electricity cost viewpoint to use the material efficiently. The conversion technology selected for this project uses an efficient gasification process and power production process. The overall efficiency is 38% for the use of heat energy of the stem material to generate electricity. This efficient use of fuel also reduces the emissions from the plant.

## 4.2 Co-Products Characteristics

### 4.2.1 Alfalfa--A Familiar Animal Feed Ingredient

Alfalfa is a well known crop in the Upper Midwest and many other regions of the country and the world. It is most often used as a forage crop. In the US and Canada, it is also processed. The most common off-farm processing in these two countries is producing de-hydrated alfalfa pellets. This product uses fresh chop, or sun-cured alfalfa which is then dried and pelleted. Alfalfa has a well established reputation as an animal feed ingredient.

The co-product produced in this arrangement differs from a strict forage crop and is categorized as a mid-level protein. The separation or fractionation step separates the stem fraction from the leaf fraction. The leaf material is high in crude protein.

The crude protein concentration in an alfalfa bale is 15-20%. The leaf material tends to be more concentrated with protein than the stem fraction. The mechanical separation process chosen for this concept results in the leaf material having a concentration of crude protein about 30%.

The excellent amino acid profile of the leaf protein gives it good value. The heat treatment (roasting) that is proposed converts a portion of the crude protein to by-pass protein, to allow a ruminant animal, such as a dairy cow, to use the protein more efficiently. A mid-level protein with a significant (60%) by-pass characteristic brings significantly higher value in the market place for ruminant animal feed.

Protein in other forms can be extracted from alfalfa and used in cosmetics, pharmaceuticals and human food. Also, other constituents in alfalfa leaf meal, such as xyanthofill, have use in special animal feed applications. These offer growth in the potential value of processing alfalfa, but they have not been evaluated in this study.

### 4.2.2 Recovery Of Leaf Material

The drying capability of the alfalfa processing facility will enhance the recovery of leaf material, and therefore the efficiency of protein recovery. Alfalfa bales that are subjected to rain or snow on exterior surfaces during transport will have the wetter material dried during the processing and the leaf-stem separation will occur without the wet material needing to be rejected. The plant dryers will be capable of drying the material from 30% to 10-15% moisture content.

# CHAPTER 5. PRODUCT COST ANALYSIS

## 5.1 Electricity Cost Analysis

### 5.1.1 COE For Biomass Electricity Generation

The information in Table 5-1 compares several different technologies with two ALFAGAS cases. The information on the technologies other than the ALFAGAS cases is from a report by EPRI;-- Strategic Analysis of Biomass and Waste Fuels for Electric Power Generation, TR-102773. These plants assumed a capacity factor of 80%.

The first ALFAGAS case is an estimate for an nth plant (i.e., mature technology) with the lower cost reflecting experience gained from building multiple plants . The cost for the second case is for a situation where the demonstration plant qualifies for federal or state government cost share in the order of magnitude (i.e., 1/3 to 1/2) typical of other USDOE Clean Coal Program supported energy projects The ALFAGAS cases use a capacity factor of 85%.

The cost of electricity is influenced by the plant size, economic and financial assumptions used, and frame work used for evaluation. The data in Table 5-2 are not directly comparable because of the different basis used, but the COE values show how the ALFAGAS options compare.

*Table 5-1 Comparison of COE for Different Biomass Generation Options (from EPRI TR-102773, Except for ALFAGAS Data)*

| TECHNOLOGY | Net Capacity MW | Net Heat Rate, Btu/kWhr | Total Capital Requirement, $/kW | Levelized COE, cents/kWhr | Plant Life, Development Level |
|---|---|---|---|---|---|
| Wood- fired stoker | 50 | 13,894 | | 8.1 | 30, nth |
| Wood fired FBC | 50 | 13,864 | 2,085 | 9.0 | 30, nth |
| WTE™ Boiler | 100 | 10,664 | 1342 | 5.6 | 30, nth |
| WTE' boiler | 50 | 10,661 | 1,723 | 6.6 | 30, nth |
| Wood GCC | 100 | 12,365 | 2,466 | 9.7 | 30, nth |
| Advanced wood GCC | 100 | 9,751 | 2,128 | 8.0 | 30, nth |
| ALFAGAS (1/3 invest. cost share) | 75 | 8910 | 1258 (after cost share) | 6.52 (with cost share) | 15, demo. |
| ALFAGAS (nth plant @ 80% of demo. project cost) | 75 | 8910 | $1543 | 6.6 | 15, nth |

*Note (EPRI data escalated from1991 to1994; ALFAGAS data in mid-94$)*

### 5.1.2 Business Growth Potential Influence On COE

Higher value co-products other than the by-pass protein may be developed from the feedstock. The COE from this concept is influenced by the co-product value. As higher valued uses can be found for variations of the processed leaf material, the utility as well as the alfalfa co-op will have enhanced returns which can be returned to investors, customers, kept with the business or shared in some combination.

### 5.1.3 Project Size Is One That Can Be Financed

The proposed joint venture arrangement in this project is with a producers (closed-end) co-op. A co-op will be able to raise equity from its members and debt from farm sector co-op banks. The cost of financing from this source may influence the COE.

### 5.1.4 Use Of Existing Sites

The choice of the site used in the feasibility study is centrally located relative to the biomass shed and is therefore advantageous for minimizing cost of transportation of the feedstock. There is good highway access to the Granite Falls Generating Plant.

The plant has a transmission system substation on site. This connection to the electric transmission grid is advantageous, because no new transmission corridor needs to be established, and the existing connections to the grid will probably not require upgrading.

## 5.2 Co-Product Cost Analysis

### 5.2.1 Value In A Feeding Ration

In Table 5-2, the value in a feeding ration of by-pass protein for 30% crude protein concentration levels has been shown to be $187.39/ ton for high corn ($2.50/bu) and soybean meal ($200/ ton) prices (see Vol 1-Sec 7.5).. For lower values of corn grain ($2.00/bu) and soybean meal ($160.00/ton), the value of the meal is proportionately lower at a $161.62/ton value. These values of the co-product are for 8% moisture content (MC). The value of the quantity of leaf meal fraction of alfalfa arriving at the facility is determined by the weight of the leaf material at 15% MC, and at this moisture level the material value is $149.32 /ton

The alfalfa price of $67.44 per ton used in this evaluation is related to corn at $2.23/bu an soybeans at $6.01/bu, which are price levels higher that the low level prices in the previous paragraph. The value of the by-pass protein co-product associated with these mid-level corn and soybean price is $174.51/ton.

The value of the by-pass protein meal is influential on the COE and this is one of the reasons that validation during the early stages of the a project is recommended.

*Table 5-2 Value of Alfalfa Leaf Meal in Dairy Rations*

| Leaf Meal Characteristics | By-Pass Protein Meal Value from Ration Analysis, $/Ton | |
|---|---|---|
| Corn grain and soybean meal price levels | High | Low |
| Meal crude protein level, % | 30 | 30 |
| Value with no by-pass treatment, $/ton | 123.36 | 106.40 |
| Value with bypass treatment, $/ton | 187.39 | 161.62 |

Note: Value for by-pass protein, high corn/soybean meal price levels is from Vol 1 (Sec 7.5)

### 5.2.2 Other Alfalfa Protein Products

Liquid protein pressed from alfalfa is an established product in France and different fractions are marketed as cosmetic and human food ingredients . In these market categories the value on a gross return per acre basis is much higher compared to the animal feed market. The processes that produce the liquid protein concentrate from fresh chop alfalfa have a by-product press-cake material that, can be dried and sized by the facility designed for this project. The cellulose material that comes from these processes is high in moisture (65%). but after drying and sizing inducted into the gasifier.

# CHAPTER 6. MARKET ANALYSIS

## 6.1 Biomass Based Electricity

The 1992 Energy Policy and Conservation Report by the Minnesota Department of Public Service reports that the State's utilities project that electricity consumption will continue to grow in the residential, commercial and industrial sectors. Further, the Report states that the 1991 Minnesota Legislature required that electric utilities demonstrate that increased demand cannot be satisfied by renewable resources before the utilities are allowed to construct a more traditional power plant. These provisions will increase the consideration of renewable energy sources, such as biomass based options, and serve to increase the market for these options.

Market demand for biomass energy options could also increase from the impact of rulemaking that has been implemented to address recent Legislative action. This action required the MN Public Utilities Commission to quantify and establish a range of environmental costs associated with each method of electricity generation (Order Establishing Interim Environmental Cost Values, Docket No. E-999/CI-939583, MN PUC). Interim values for $CO_2$ have been established at $5.99 to $13.60 per ton.

For the combustion turbine-combined cycle plants such as discussed in this study, this translates to externality values of $8-!8 per Mwhr. The demand for biomass energy options could be influenced at the resource planning level, because the cost of electricity (COE) for a biomass option that was $8-18 per Mwhr higher than that from a coal or natural gas option would be considered similar. The Order clarifies that these values are to be used in all Commission proceedings, but not for dispatch of electric power from existing facilities.

The USDOE in their 5 Year plan for Biomass Power Program projects capacity additions from 6,500 Mwe in 1992 to 25,000 Mwe by 2010. Their assumptions for this projected increase in installed capacity are that less efficient Rankine-based cogeneration will eventually be replaced by:

- combustion turbine cogeneration;
- improved stand-alone steam units;
- integrated gasification/advanced turbine systems.

USDOE anticipates expansion in the use of biomass feedstocks for power production, but this requires that an abundant and reliable supply of low cost biomass feedstock is available. USDOE

believes a window of opportunity exists for the accelerating the expansion of biomass power in the nations energy mix because:

- the need for rural revitalization and job creation
- concerns regarding global climate change
- new Clean Air Act amendments
- increasing waste disposal costs
- the need to improve international industrial competitiveness
- growing worldwide energy
- energy security.

The Minnesota State Legislature has also mandated NSP in 1994 to install or have under construction by the end of 1998 or 2002, 50 Mwe and 75 Mwe of biomass capacity respectively.

The above discussion is focused on market demands from policy, legislative and strategic views For this particular concept, the market will be influenced by the demand for the co-product. As higher value or other co-products are identified, the opportunity to generate electricity from the remaining cellulosic fractions will expand. Other biomass feedstocks may find similar market niches where the plant extracts and the remaining cellulosic fractions can together be combined in a viable business venture.

## 6.2 Co-Product Market

The market for mid level protein is large. The domestic market for US produced mid-level protein was 24 million metric tons and the export was another 7.2 million tons for the year 1993. This compares with the production of 321,000 tons per year from a plant of the size in this study.

## 6.3 Feedstock Availability

### 6.3.1 Current Interest In Biomass To Use Available Land Resource

USDOE projects a growing land resource of agricultural land in future years, as conventional agricultural production continues to improve in productivity, and as land is released from the Conservation Reserve Program. The release of this land is projected to be a potential fuel production resource for electricity generation.

The land coming out of the CRP could potentially produce alfalfa or other herbaceous crops on a continuos basis without reversion to row crops. The level of economic return might be different than that evaluated in this concept, but sun cured biomass could be processed even though a protein by product protein might not be separated from it.

# CHAPTER 7. FINANCIAL ANALYSIS

## 7.1 Basis For Capital Cost Data

Financial projections for this concept have been developed from the data base from other sections of this study. The capital cost of the gasification and power islands was developed from the design bases prepared by IGT, TPC and WEC that is discussed in Vol. 2. Capital cost for the separation and processing systems has been developed from information provided by Ronning Engineering Company, a firm specializing in the design of alfalfa dehydration plants and related animal feed drying and processing systems. The direct costs of the processing, gasification and power islands include equipment, structures and construction activities. No cost for land is included because an existing site owned by NSP is being used for the feasibility study. In addition to the direct costs, indirect costs for permitting, facility engineering, and project management have been included. The capital cost for the facility is shown in Table. 7-1.

## 7.2 Ownership Description

The joint venture arrangement for this concept proposes ownership by both the utility entity and the alfalfa production co-op. During the initial phases of the project, the new technology suppliers might also have an equity position in the operation, but after the process and equipment designs have been proven reliable, the suppliers equity position is assumed to be bought out by the utility and co-op organizations at some predetermined price.

For the proforma calculations involving dual, ownership of the entire facility, it has been assumed that a 50% ownership exists, and that this split follows along the lines of the various major systems. Table 7-2 shows the plant cost division of ownership for a 50% split. The processing plant and the gasifier island represent about half of the investment, and the power island represents the other half. If Section 29 Tax Credits were available (i.e., if Congress extends the date beyond 1997), the co-op could use them (that is if they could pass them down to the individual owner), if could sell the gas to the utility entity within the joint venture arrangement.

## 7.3 Operating And Maintenance Costs

The operation and maintenance costs of the power plant and alfalfa processing plant as used in the proforma are represented by Table 7-3. They represent all costs required to operate the facilities except capital. More detailed explanations of operating and maintenance costs can be found in Volume 4 - Site Considerations. Table 7-4 is a further regrouping of the O&M costs for various components of the plant.

*Table 7-1 Capital Cost of Power Plant and Processing Plant*

**Capital Cost**

| Section | Item | Cost (k$) |
|---|---|---|
| Power Plant | **Direct Cost** | |
| | Gasification | 37,258 |
| | Combustion Turbine | 15,541 |
| | Steam Turbine | 3,422 |
| | Balance of Plant | 22,355 |
| | Plant Control System | 645 |
| | Hot Gas Clean Up | 3,057 |
| | Installation Services | 14,912 |
| | Main Turbine Building | 460 |
| | Waste Pond & Liner | 126 |
| | Sales Tax | 3,466 |
| | Contingency | 7,000 |
| | **Sub total Directs** | **108,242** |
| | **Indirect Cost** | |
| | Permitting | 4,000 |
| | Gasification, spares/startup | 5,557 |
| | NSP Overheads @ 5% | 5,412 |
| | **Sub total Indirects** | **14,969** |
| | Total, k$ | 123,211 |
| | $/kw | 1,643 |
| Processing Plant | **Direct Cost** | |
| | Receiving Area | 816 |
| | Drying | 6,141 |
| | Hammermill | 1,219 |
| | Pelletize | 2,374 |
| | Conveying to Plant | 286 |
| | Sub total Directs | 10,836 |
| | **Indirect Cost** | |
| | Engineering | 580 |
| | NSP Overheads @ 10% | 1,084 |
| | **Sub total Indirects** | **1,664** |
| | Total, k$ | 12,500 |
| | $/kw | 167 |
| **Total Plant** | **k$** | **135,711** |
| | **$/kw** | **1,809** |
| Construction Interest (AFUDC) | | |
| | Power Plant | 8,116 |
| | Processing Plant | 823 |
| **Total Plant Investment, k$** | | **144,650** |
| | **$/kw** | **1,929** |

*Table 7-2 Alfagas Capital Cost Ownership Split*

| | Capital Cost | | |
|---|---|---|---|
| | Ownership: | CO-OP | UTILITY |
| Section | Item | Gasification & Processing Plant | Power Island & Hot Gas Cleanup |
| Power Plant | **Direct Cost** | | |
| | Gasification | 37258 | |
| | Combustion Turbine | | 15541 |
| | Steam Turbine | | 3422 |
| | BOP | | 22355 |
| | Plant Control System | | 645 |
| | Hot Gas Clean Up | | 3057 |
| | Installation Services | | 14912 |
| | Main Turbine Building | | 460 |
| | Waste Pond & Liner | | 126 |
| | Sales Tax | 1501 | 1965 |
| | Contingency | 7000 | 0 |
| | **Sub total Directs** | **45759** | **62483** |
| | **Indirect Cost** | | |
| | Permitting | 2000 | 2000 |
| | Gasification, spares/startup | 5557 | |
| | NSP Engrg & Supv | 1975 | 3309 |
| | **Sub total Indirects** | **9532** | **5309** |
| | Total, k$ | 55291 | 67792 |
| | $/kw | | |
| Processing Plant | **Direct Cost** | | |
| | Receiving Area | | |
| | Drying | | |
| | Hammermill | | |
| | Pelletize | | |
| | Conveying to Plant | | |
| | **Sub total Directs** | | |
| | Total, k$ | 12500 | |
| | Unit cost, $/kw | | |
| **Total Plant** | **k$** | **67791** | **67792** |
| | **$/kw** | | |
| Construction Interest (AFUDC) | | 2980 | 2980 |
| | Total Plant Investment, K$ (Cost/Share) | 70771 | 70772 |
| | Cost Share Amount | 23591 | 23591 |
| **Total Plant Investment, k$** | | **47181** | **47181** |

*Table 7-3 Operating and Maintenance Costs of Power Plant and Processing Plant*

**Operating and Maintenance Cost**

| Category | Section | Description | Annual Cost (k$) |
|---|---|---|---|
| **Fixed Cost** | | | |
| | Gasifier & Power Island (CC) | Labor (30 people x $55k/year) | 1,650 |
| | | Supplies and Material | 120 |
| | | Rentals and Leases | 20 |
| | | Contracted Services | 25 |
| | | Permitting Costs | 20 |
| | | Routine Maintenance | 130 |
| | Processing Plant | Labor (20 people x $55k/year) | 1,100 |
| | | Leaf Marketing | 200 |
| | | Maintenance (Buildings & Grounds) | 200 |
| **Variable Cost -Incremental** | | | |
| | Gasifier | Bed Material | 201 |
| | | Liquid Nitrogen | 11 |
| | | Continuous Inert Gas | 619 |
| | | Ash Handling | 145 |
| | Power Island (CC) | Demineralized Water | 283 |
| | | Cooling Tower & Boiler Chemicals | 198 |
| | Processing Plant | Dryer Burner Fuel | 372 |
| | | Leaf Roasting at 10Mbtu/hr | 0 |
| | | Electric Power | 876 |
| | | Maintenance @ 2.5% of Capital Cost | 312 |
| **Variable Cost - Hourly** | Gasifier | Inspection and Repair | 737 |
| | Combustion Turbine | Inspection and Repair | 510 |
| | Steam Turbine | Inspection and Repair | 51 |
| | HRSG (Boiler) | Inspection and Repair | 62 |
| | Balance of Plant | Inspection and Repair | 170 |
| | Hot Gas Clean-Up Unit | Inspection and Repair | 187 |
| **Total/year, k$** | | | **8,200** |
| **Incremental Cost at 85% Cap. Factor** | | | **14.68/MWh** |

*Table 7-4 Summary of Operating and Maintenance Costs of Power Plant and Processing Plant Components*

**Operating and Maintenance Cost Split**

| Section | Power Island | Gasifier | Hot Gas Clean-Up | Processing Plant | Total |
|---|---|---|---|---|---|
| Fixed O&M, k$/year | 1,148 | 818 | 0 | 1,500 | 3,466 |
| Variable O&M, k$/year | 1,713 | 1,275 | 187 | 1,560 | 4,735 |

## 7.4 Base Case Description

The base case assumes 50% ownership each by the utility and the co-op. It assumes one-third cost share by USDOE/NREL or others, which results in an investment (including AFUDC for the utility portion or interest on construction funds for the co-op) of either the utility or the co-op equal to the cost share of $7.2 million. The cost share does not require an interest during construction component, so the total cost for the project is less by that amount than the total project cost without cost share.

The target cost for alfalfa is set at $67.44 per ton (15% MC and prime alfalfa grade). This is the value from Volume 1 (Sec 4.2), where the AAAACCS rotation system provides an equivalent (as defined in that section) net return to that of producing, storing, transporting, accommodating shrinkage, marketing and selling corn and soybeans in a CSCSCSC rotation. Since the co-op provides the mechanism to add value (store, transport, process, accommodate shrinkage, market and sell) to the leaf meal, the target return for the farmer, after producing, storing, processing and selling would be met at the value of $67.44 per ton after participating in the co-op.

The farmer provides an equity investment via the co-op at a $/acre value that will raise 1/2th the needed equity (1/4th the needed investment cost after cost share). For the base case, it is $127 per acre. The farmer needs to achieve the $67.44 per ton after participating in the co-op, plus a return on the investment at an opportunity rate (5% assumed for this study). The value of the alfalfa when delivered to the storage site will be lower than the $67.44 per ton, because the remainder will come from participating in the co-op.

The proforma assumes 50% debt and 50% equity, a slight departure from a typical utility split such as NSP's 52% debt and 48% equity structure. The discount rate of 8.54% reflects the cost of debt and the allowance for a return on rate base equity (in this case 11.5%).

The base case (see Table 7-5) results in a cost of electricity of 6.52 cents per kWhr on a constant dollar basis (no inflation adjustment). This cost is a result of achieving the necessary return to the farmer to meet the $67.44 /ton return for producing, marketing, etc., of the alfalfa and a return on the investment the farmer makes in the co-op.

Ash from the gasifier and hot gas clean-up systems is assumed to be returned to the land producing the alfalfa. The material would consist of ash from the alfalfa, a small amount of unconverted carbon and converted dolomite material. This material would provide a means to return all or a portion of the potassium and phosphorus to the land. The average P and K fertilizer value is about $26/ acre / year or about $200/ton, which would allow a credit for ash utilization sufficient to cover the cost of handling ash which might be in the order of $50/ton.

## 7.5 COE Range

If cost share by others is equal to the investment by the joint venture ( i.e., 50% cost share), the COE is 5.5 cents per kWhr (see Table 7-6). For no cost share the COE is 8.0 kWhr (see Table 7-7).

## 7.6 Tax Credit Influence

Section 29 income tax credits are due to expire in 1996, however there are proposals to request the US Congress to extend it. These credits are on a Btu basis for barrels of oil that is displaced. If these credits were available, there would need to be a separation between the producer who sells the biomass based gas and the electrical generator who uses the gas. The effect of this credit would be to reduce the cost of alfalfa to the joint venture. For this project, the total credit has been calculated to be worth $4,181,000 per year for 10 years, except that any other federal or state government support requires a pro-rata reduction in the tax credit value. Thus with 1/3 cost share the tax credit is worth $2,787,000 million dollars a year for 10 years. This would reduce the COE by about 0.5 cents per kWhr below the base case value of 6.52 cents per kWhr.

The IRS section 45 credits (at 1.5 cents/ kWhr) might be applicable to this project, but again it would take action by Congress to extend the dates for applicability to this project. The current statutes require a project to be inservice by July 1, 1999. This project could have all implementing contracts in place by that date, but because of the involvement of a co-product, it might not qualify for the credit. However, if the credits were available for a 10 year period, the pro-rata share available for the utility entity would be 1.0 cents /kWhr for 1/3 cost share, and 0.75 cents /kWhr for 50% cost share. These would reduce the cost of electricity by those amounts. This information is summarized in Table 7-8.

Alfalfa Plant

ALFPF31F.XLS5/1

| | | | | | | |
|---|---|---|---|---|---|---|
| Property Tax Rate | 3.60% | | Opportunity rate for farmer | 5.00% | | Tons/yr at edge of field |
| Escalation | 0.00% | 3.80% | Return target, $/ton | $67.44 | | Pre proc payment total |
| Discount Rate | 8.54% | | Tons/year rec'd at plant, (AR) | 683,592 | | alfalfa pre-proc budget |
| Tax Rate | 41% | | Capacity factor | 85.00% | | Per cent leaf |
| Debt Ratio | 50% | | TPY, stems, 15%MC (53%) | 362,304 | | Per cent stems |
| Debt Cost | 8.60% | | TPY,leaf, 15%MC (47%) | 321,288 | Meal @ 100% | Capacity Factor |
| C-S related escal | 0.00% | | Leaf meal, $/T, 8%MC | 161.63 | 161.63 | Capacity, MW |
| Leaf meal escal yrs 1-5 | 0.00% | | Leaf meal, $/T, 15%MC | 149.33 | 149.33 | Acres in production(@3.8T/A) |
| Leaf meal escal yrs 11-25 | 0.00% | | Tran.and reg stor., per AR ton | $11.27 | | Energy, MWhrs |
| Elec escal, yrs 1-5 | 0.00% | | Shrinkage, % of AR tons | 3.16% | | Investment per acre |
| Cost share by others, k$ | $47,181 | | Tran cost. | $7,704 | | Shrinkage cost, total,k$ |
| Power or proc. Plant,k$ | $94,361 | 5 Year Tax Life | | | | Shrinkage cost per ton |
| Power or proc. Plant,k$ | $0 | 7 Year Tax Life | | | | Fraction of AR thru reg stor |
| Investment with AFUDC, k$ | $94,361 | | | | | Total cost of alfal at PP |
| Pre-proc Alf. paym't, $/Ton | $65.27 | yrs 1-5 | yrs 6-10 | | 47,979 | Program support paym't, $/A |
| Cost of electricity, $/MWhr | $65.23 | | | | | |

| Year | | 1 | 2 | 3 | 4 | 5 | 6 | 7 |
|---|---|---|---|---|---|---|---|---|
| REVENUE,k$ | | | | | | | | |
| Sales of Electricity, k$ | | $36,428 | $36,428 | $36,428 | $36,428 | $36,428 | $36,428 | $36,428 |
| Sales of Leaf Meal, K$ | | $47,979 | $47,979 | $47,979 | $47,979 | $47,979 | $47,979 | $47,979 |
| Sub total (A) | | $84,406 | $84,406 | $84,406 | $84,406 | $84,406 | $84,406 | $84,406 |
| EXPENSES, k$ | | | | | | | | |
| Plant O&M | | $5,140 | $5,140 | $5,140 | $5,140 | $5,140 | $5,140 | $5,140 |
| Processing O&M | | $3,060 | $3,060 | $3,060 | $3,060 | $3,060 | $3,060 | $3,060 |
| Corp A&G and operating cap. interest | | $2,000 | $2,000 | $2,000 | $2,000 | $2,000 | $2,000 | $2,000 |
| Alfalfa cost at PP (prod,tran,stor,&shrink) | | $53,732 | $53,732 | $53,732 | $53,732 | $53,732 | $53,732 | $53,732 |
| Tax depreciation (E) | | $18,872 | $30,196 | $18,117 | $10,870 | $10,870 | $5,435 | $0 |
| Property Tax | | $3,397 | $3,397 | $3,397 | $3,397 | $3,397 | $3,397 | $3,397 |
| Sub total of exp. with tax deprec., before int. (B) | | $86,201 | $97,525 | $85,446 | $78,199 | $78,199 | $72,764 | $67,329 |
| Operating margin (C = A-B) | | ($1,795) | ($13,118) | ($1,040) | $6,207 | $6,207 | $11,642 | $17,077 |
| Tax effect (D = C*Tax rate) | | ($736) | ($5,378) | ($426) | $2,545 | $2,545 | $4,773 | $7,002 |
| Cash Flow (F = A-B+E-D) | (94,361) | $17,813 | $22,456 | $17,504 | $14,532 | $14,532 | $12,304 | $10,076 |
| PV Cash Flow | ($94,361) | $16,412 | $19,062 | $13,690 | $10,472 | $9,648 | $7,526 | $5,678 |
| DCF | $114,466 | | | | | | | |
| NET NPV and IRR | $20,105 | 12.67% | | | | | | |
| Cost of electricity (before Tx Crdt), cents per kwhr | | 6.52 | 6.52 | 6.52 | 6.52 | 6.52 | 6.52 | 6.52 |
| ALFALFA CO-OP SHARE | | | | | | | | |
| Net Income to Co-op | | $1,985 | $2,130 | $2,334 | $2,476 | $2,579 | $2,683 | $2,758 |
| Net Income, $/T @PP | | 2.90 | 3.12 | 3.41 | 3.62 | 3.77 | 3.92 | 4.04 |
| Return on initial investment for Co-op | | 8.41% | 9.03% | 9.90% | 10.49% | 10.93% | 11.37% | 11.69% |
| Farmer rev. from selling alfalfa to co-op, k$ | | $46,028 | $46,028 | $46,028 | $46,028 | $46,028 | $46,028 | $46,028 |
| Expected return on inves at oppor rate | | $1,180 | $1,180 | $1,180 | $1,180 | $1,180 | $1,180 | $1,180 |
| Return target | | $47,558 | $47,558 | $47,558 | $47,558 | $47,558 | $47,558 | $47,558 |
| Return target with invest | | $48,738 | $48,738 | $48,738 | $48,738 | $48,738 | $48,738 | $48,738 |
| Tax credit, (Sec 29) | 4,181 | $0 | $0 | $0 | $0 | $0 | $0 | $0 |
| Total rev. for farmer thru prod & co-op | | $48,013 | $48,158 | $48,362 | $48,504 | $48,607 | $48,711 | $48,786 |
| INCOME & EXPENSE STM'T | | | | | | | | |
| Revenue from Sales of Electricity | | $36,428 | $36,428 | $36,428 | $36,428 | $36,428 | $36,428 | $36,428 |
| Revenue from Sales of Leaf Meal | | $47,979 | $47,979 | $47,979 | $47,979 | $47,979 | $47,979 | $47,979 |
| Sub total revenue (A) | | $84,406 | $84,406 | $84,406 | $84,406 | $84,406 | $84,406 | $84,406 |
| Plant O&M | | $5,140 | $5,140 | $5,140 | $5,140 | $5,140 | $5,140 | $5,140 |
| Processing O&M | | $3,060 | $3,060 | $3,060 | $3,060 | $3,060 | $3,060 | $3,060 |
| Corp A&G and operating cap. interest | | $2,000 | $2,000 | $2,000 | $2,000 | $2,000 | $2,000 | $2,000 |
| Cost of Alfalfa | | $53,732 | $53,732 | $53,732 | $53,732 | $53,732 | $53,732 | $53,732 |
| Book Depreciation | | $6,291 | $6,291 | $6,291 | $6,291 | $6,291 | $6,291 | $6,291 |
| Property Tax | | $3,397 | $3,397 | $3,397 | $3,397 | $3,397 | $3,397 | $3,397 |
| Interest | | $4,058 | $3,565 | $2,873 | $2,394 | $2,043 | $1,692 | $1,436 |
| Sub Total Exp. with book deprec.& int .(F) | | $77,677 | $77,185 | $76,493 | $76,014 | $75,663 | $75,312 | $75,056 |
| Taxable Income (G=A-F) | | ($5,852) | ($16,683) | ($3,913) | $3,813 | $4,164 | $9,950 | $15,641 |
| Current Tax (K= G*tax rate) | | ($2,400) | ($6,840) | ($1,604) | $1,563 | $1,707 | $4,080 | $6,413 |
| Book Depreciation (I) | | $6,291 | $6,291 | $6,291 | $6,291 | $6,291 | $6,291 | $6,291 |
| Deferred Tax (J) | | $5,158 | $9,801 | $4,849 | $1,878 | $1,878 | ($351) | ($2,579) |
| Net Income (N= A-F-K-J) | | $3,970 | $4,261 | $4,669 | $4,951 | $5,159 | $5,366 | $5,517 |
| Return on initial equity investment, % | | 8.41 | 9.03 | 9.90 | 10.49 | 10.93 | 11.37 | 11.69 |
| DEPRECIATION | | | | | | | | |
| Tax Depr Rates (5 Year) | | 20.00% | 32.00% | 19.20% | 11.52% | 11.52% | 5.76% | |
| Tax Depr Rates (7 Year) | | 10.71% | 25.51% | 18.22% | 13.02% | 9.30% | 8.85% | 8.86% |
| Tax Depreciation (H) | | $18,872 | $30,196 | $18,117 | $10,870 | $10,870 | $5,435 | $0 |
| Book Depreciation (I) | | $6,291 | $6,291 | $6,291 | $6,291 | $6,291 | $6,291 | $6,291 |
| Deferred Tax (J= [H-I]*tax rate) | | $5,158 | $9,801 | $4,849 | $1,878 | $1,878 | ($351) | ($2,579) |
| RESERVES | | | | | | | | |
| Gross Plant | $94,361 | $94,361 | $94,361 | $94,361 | $94,361 | $94,361 | $94,361 | $94,361 |
| Depr Res | $0 | $6,291 | $12,581 | $18,872 | $25,163 | $31,454 | $37,744 | $44,035 |
| Tax Res | $0 | $5,158 | $14,959 | $19,808 | $21,686 | $23,564 | $23,213 | $20,634 |
| Rate Base | $94,361 | $82,912 | $66,820 | $55,681 | $47,512 | $39,344 | $33,404 | $29,692 |
| BALANCES | | | | | | | | |
| Debt | $47,181 | $41,456 | $33,410 | $27,840 | $23,756 | $19,672 | $16,702 | $14,846 |
| Equity | $47,181 | $41,456 | $33,410 | $27,840 | $23,756 | $19,672 | $16,702 | $14,846 |
| | $94,361 | $82,912 | $66,820 | $55,681 | $47,512 | $39,344 | $33,404 | $29,692 |
| COE | | | | | | | | |
| Cost of electricity, cents per kwhr | | 6.52 | 6.52 | 6.52 | 6.52 | 6.52 | 6.52 | 6.52 |
| Tax Credit (Sec 42) | 1.50 | 0.00 | 0.00 | 0.00 | 0.00 | 0.00 | 0.00 | 0.00 |
| Resulting cost of electricity | | 6.52 | 6.52 | 6.52 | 6.52 | 6.52 | 6.52 | 6.52 |

:33 PM1

# TABLE 7-5 BASE CASE PROFORMA

705,194
$46,028
$47,558
47.00%
53.00%
85%
75
185,577
558,450
$127
$1,410
$2.06
60.00%
$53,732
0

Yield range from Table 4.1-1 forTarget price (C-S breakeven), Tons/A 3.8-4.7
Yield for acreage calcu. & farmer invest, Tons/acre 3.80

| | |
|---|---|
| COMMENTS | Base case; 1/3 cost share; no tax credits |
| Cost share | USDOE/NREL or others provide 1/3 cost; balance 50/50 between utility and alfalfa co-op |
| Leaf meal value | For CP= 30% and processed as by-pass protein; |
| Escalation | none |
| Ownership | Co-op has 50% including gasifier and processing plant; utility has HGCU and CT-CC and BOP |
| Tax | Assumes owners can used tax deferments or tax losses |
| ROE | ROE is implied in the discount rate equal to the utility return on rate base of 11.5% |
| Rtr'n on initial equity | Net income / initial equity investment |
| Ave. Rtr'n on initial eq. | Average annual net income over life of plant / initial equity investment |

| 8 | 9 | 10 | 11 | 12 | 13 | 14 | 15 | | | | |
|---|---|---|---|---|---|---|---|---|---|---|---|
| $36,428 | $36,428 | $36,428 | $36,428 | $36,428 | $36,428 | $36,428 | $36,428 | | | | |
| $47,979 | $47,979 | $47,979 | $47,979 | $47,979 | $47,979 | $47,979 | $47,979 | | | | |
| $84,406 | $84,406 | $84,406 | $84,406 | $84,406 | $84,406 | $84,406 | $84,406 | | | | |
| $5,140 | $5,140 | $5,140 | $5,140 | $5,140 | $5,140 | $5,140 | $5,140 | | | | |
| $3,060 | $3,060 | $3,060 | $3,060 | $3,060 | $3,060 | $3,060 | $3,060 | | | | |
| $2,000 | $2,000 | $2,000 | $2,000 | $2,000 | $2,000 | $2,000 | $2,000 | | | | |
| $53,732 | $53,732 | $53,732 | $53,732 | $53,732 | $53,732 | $53,732 | $53,732 | | | | |
| $0 | $0 | $0 | $0 | $0 | $0 | $0 | $0 | | | | |
| $3,397 | $3,397 | $3,397 | $3,397 | $3,397 | $3,397 | $3,397 | $3,397 | | | | |
| $67,329 | $67,329 | $67,329 | $67,329 | $67,329 | $67,329 | $67,329 | $67,329 | $0 | $0 | $0 | $0 |
| $17,077 | $17,077 | $17,077 | $17,077 | $17,077 | $17,077 | $17,077 | $17,077 | | | | |
| $7,002 | $7,002 | $7,002 | $7,002 | $7,002 | $7,002 | $7,002 | $7,002 | | | | |
| $10,076 | $10,076 | $10,076 | $10,076 | $10,076 | $10,076 | $10,076 | $10,076 | | | | |
| $5,232 | $4,820 | $4,441 | $4,092 | $3,770 | $3,473 | $3,200 | $2,949 | | | | |
| 6.52 | 6.52 | 6.52 | 6.52 | 6.52 | 6.52 | 6.52 | 6.52 | | | | |
| $2,805 | $2,852 | $2,900 | $2,947 | $2,994 | $3,041 | $3,088 | $3,135 | | | | |
| 4.10 | 4.17 | 4.24 | 4.31 | 4.38 | 4.45 | 4.52 | 4.59 | | | | |
| 11.89% | 12.09% | 12.29% | 12.49% | 12.69% | 12.89% | 13.09% | 13.29% | Ave. Return on initial equity investment= | | | 11.50% |
| $46,028 | $46,028 | $46,028 | $46,028 | $46,028 | $46,028 | $46,028 | $46,028 | | | | |
| $1,180 | $1,180 | $1,180 | $1,180 | $1,180 | $1,180 | $1,180 | $1,180 | | | | |
| $47,558 | $47,558 | $47,558 | $47,558 | $47,558 | $47,558 | $47,558 | $47,558 | | | | |
| $48,738 | $48,738 | $48,738 | $48,738 | $48,738 | $48,738 | $48,738 | $48,738 | $731,066 | Target Total | | |
| $0 | $0 | $0 | $0 | $0 | $0 | $0 | $0 | | | | |
| $48,833 | $48,880 | $48,928 | $48,975 | $49,022 | $49,069 | $49,116 | $49,163 | $731,127 | Proforma Total | | |
| | | | | | | | | 731,066 | | | |
| $36,428 | $36,428 | $36,428 | $36,428 | $36,428 | $36,428 | $36,428 | $36,428 | | | | |
| $47,979 | $47,979 | $47,979 | $47,979 | $47,979 | $47,979 | $47,979 | $47,979 | | | | |
| $84,406 | $84,406 | $84,406 | $84,406 | $84,406 | $84,406 | $84,406 | $84,406 | | | | |
| $5,140 | $5,140 | $5,140 | $5,140 | $5,140 | $5,140 | $5,140 | $5,140 | | | | |
| $3,060 | $3,060 | $3,060 | $3,060 | $3,060 | $3,060 | $3,060 | $3,060 | | | | |
| $2,000 | $2,000 | $2,000 | $2,000 | $2,000 | $2,000 | $2,000 | $2,000 | | | | |
| $53,732 | $53,732 | $53,732 | $53,732 | $53,732 | $53,732 | $53,732 | $53,732 | | | | |
| $6,291 | $6,291 | $6,291 | $6,291 | $6,291 | $6,291 | $6,291 | $6,291 | | | | |
| $3,397 | $3,397 | $3,397 | $3,397 | $3,397 | $3,397 | $3,397 | $3,397 | | | | |
| $1,277 | $1,117 | $958 | $798 | $638 | $479 | $319 | $160 | | | | |
| $74,897 | $74,737 | $74,577 | $74,418 | $74,258 | $74,099 | $73,939 | $73,779 | | | | |
| $15,801 | $15,960 | $16,120 | $16,279 | $16,439 | $16,598 | $16,758 | $16,918 | | | | |
| $6,478 | $6,544 | $6,609 | $6,675 | $6,740 | $6,805 | $6,871 | $6,936 | | | | |
| $6,291 | $6,291 | $6,291 | $6,291 | $6,291 | $6,291 | $6,291 | $6,291 | | | | |
| ($2,579) | ($2,579) | ($2,579) | ($2,579) | ($2,579) | ($2,579) | ($2,579) | ($2,579) | | | | |
| $5,611 | $5,705 | $5,799 | $5,893 | $5,987 | $6,082 | $6,176 | $6,270 | $81,415 | Total net inc | | |
| 11.89 | 12.09 | 12.29 | 12.49 | 12.69 | 12.89 | 13.09 | 13.29 | Ave. Return on initial equity investment= | | | 11.50% |
| 5.53% | | | | | | | | | | | |
| $0 | $0 | $0 | $0 | $0 | $0 | $0 | $0 | | | | |
| $6,291 | $6,291 | $6,291 | $6,291 | $6,291 | $6,291 | $6,291 | $6,291 | | | | |
| ($2,579) | ($2,579) | ($2,579) | ($2,579) | ($2,579) | ($2,579) | ($2,579) | ($2,579) | | | | |
| $94,361 | $94,361 | $94,361 | $94,361 | $94,361 | $94,361 | $94,361 | $94,361 | | | | |
| $50,326 | $56,617 | $62,907 | $69,198 | $75,489 | $81,780 | $88,070 | $94,361 | | | | |
| $18,054 | $15,475 | $12,896 | $10,317 | $7,738 | $5,158 | $2,579 | ($0) | | | | |
| $25,981 | $22,269 | $18,558 | $14,846 | $11,135 | $7,423 | $3,712 | ($0) | | | | |
| $12,990 | $11,135 | $9,279 | $7,423 | $5,567 | $3,712 | $1,856 | ($0) | | | | |
| $12,990 | $11,135 | $9,279 | $7,423 | $5,567 | $3,712 | $1,856 | ($0) | | | | |
| $25,981 | $22,269 | $18,558 | $14,846 | $11,135 | $7,423 | $3,712 | ($0) | | | | |
| 6.52 | 6.52 | 6.52 | 6.52 | 6.52 | 6.52 | 6.52 | 6.52 | 6.52 Ave | | | |
| 0.00 | 0.00 | 0.00 | 0.00 | 0.00 | 0.00 | 0.00 | 0.00 | 0.00 Ave | | | |
| 6.52 | 6.52 | 6.52 | 6.52 | 6.52 | 6.52 | 6.52 | 6.52 | 6.52 Ave | | | |

Alfalfa Plant

ALFPF33F.XLS

| | | | | | | | |
|---|---|---|---|---|---|---|---|
| Property Tax Rate | 3.60% | | Opportunity rate for farmer | 5.00% | | | Tons/yr at edge of field |
| Escalation | 0.00% | 3.80% | Return target, $/ton | $67.44 | | | Pre proc payment total |
| Discount Rate | 8.54% | | Tons/year rec'd at plant, (AR) | 683,592 | | | alfalfa pre-proc budget |
| Tax Rate | 41% | | Capacity factor | 85.00% | | | Per cent leaf |
| Debt Ratio | 50% | | TPY, stems, 15%MC (53%) | 362,304 | | | Per cent stems |
| Debt Cost | 8.60% | | TPY,leaf, 15%MC (47%) | 321,288 | Meal @ 100% | | Capacity Factor |
| C-S related escal | 0.00% | | Leaf meal, $/T, 8%MC | 161.63 | | 161.63 | Capacity, MW |
| Leaf meal escal yrs 1-5 | 0.00% | | Leaf meal, $/T, 15%MC | 149.33 | | 149.33 | Acres in production(@3.8T/A) |
| Leaf meal escal yrs 11-25 | 0.00% | | Tran.and reg stor., per AR ton | $11.27 | | | Energy, MWhrs |
| Elec escal, yrs 1-5 | 0.00% | | Shrinkage, % of AR tons | 3.16% | | | Investment per acre |
| Cost share by others, k$ | $70,019 | | Tran cost. | $7,704 | | | Shrinkage cost, total,k$ |
| Power or proc. Plant,k$ | $70,019 | 5 Year Tax Life | | | | | Shrinkage cost per ton |
| Power or proc. Plant,k$ | $0 | 7 Year Tax Life | | | | | Fraction of AR thru reg stor |
| Investment with AFUDC, k$ | $70,019 | | | | | | Total cost of alfal at PP |
| Pre-proc Alf. paym't, $/Ton | $65.83 | yrs 1-5 | yrs 6-10 | | | 47,979 | Program support paym't, $/A |
| Cost of electricity, $/MWhr | $56.47 | | | | | | |

| Year | | 1 | 2 | 3 | 4 | 5 | 6 | |
|---|---|---|---|---|---|---|---|---|
| REVENUE,k$ | | | | | | | | |
| Sales of Electricity, k$ | | $31,536 | $31,536 | $31,536 | $31,536 | $31,536 | $31,536 | $31,53 |
| Sales of Leaf Meal, K$ | | $47,979 | $47,979 | $47,979 | $47,979 | $47,979 | $47,979 | $47,97 |
| Sub total (A) | | $79,514 | $79,514 | $79,514 | $79,514 | $79,514 | $79,514 | $79,51 |
| EXPENSES, k$ | | | | | | | | |
| Plant O&M | | $5,140 | $5,140 | $5,140 | $5,140 | $5,140 | $5,140 | $5,14 |
| Processing O&M | | $3,060 | $3,060 | $3,060 | $3,060 | $3,060 | $3,060 | $3,06 |
| Corp A&G and operating cap. interest | | $2,000 | $2,000 | $2,000 | $2,000 | $2,000 | $2,000 | $2,00 |
| Alfalfa cost at PP (prod,tran,stor,&shrink) | | $54,127 | $54,127 | $54,127 | $54,127 | $54,127 | $54,127 | $54,12 |
| Tax depreciation (E) | | $14,004 | $22,406 | $13,444 | $8,066 | $8,066 | $4,033 | $ |
| Property Tax | | $2,521 | $2,521 | $2,521 | $2,521 | $2,521 | $2,521 | $2,52 |
| Sub total of exp. with tax deprec., before int. (B) | | $80,851 | $89,254 | $80,291 | $74,914 | $74,914 | $70,881 | $66,84 |
| Operating margin (C = A-B) | | ($1,337) | ($9,739) | ($777) | $4,600 | $4,600 | $8,634 | $12,66 |
| Tax effect (D = C*Tax rate) | | ($548) | ($3,993) | ($319) | $1,886 | $1,886 | $3,540 | $5,19 |
| Cash Flow (F = A-B+E-D) | (70,019) | $13,215 | $16,660 | $12,985 | $10,780 | $10,780 | $9,127 | $7,47 |
| PV Cash Flow | ($70,019) | $12,175 | $14,142 | $10,156 | $7,768 | $7,157 | $5,583 | $4,21 |
| DCF | $84,912 | | | | | | | |
| NET NPV and IRR | $14,893 | 12.66% | | | | | | |
| Cost of electricity (before Tx Crdt), cents per kwhr | | 5.65 | 5.65 | 5.65 | 5.65 | 5.65 | 5.65 | 5. |
| ALFALFA CO-OP SHARE | | | | | | | | |
| Net Income to Co-op | | $1,471 | $1,579 | $1,731 | $1,836 | $1,912 | $1,989 | $2,04 |
| Net Income, $/T @PP | | 2.15 | 2.31 | 2.53 | 2.69 | 2.80 | 2.91 | 2. |
| Return on initial investment for Co-op | | 8.41% | 9.02% | 9.89% | 10.49% | 10.93% | 11.36% | 11.68 |
| Farmer rev. from selling alfalfa to co-op, k$ | | $46,423 | $46,423 | $46,423 | $46,423 | $46,423 | $46,423 | $46,42 |
| Expected return on inves at oppor rate | | $875 | $875 | $875 | $875 | $875 | $875 | $87 |
| Return target | | $47,558 | $47,558 | $47,558 | $47,558 | $47,558 | $47,558 | $47,55 |
| Return target with invest | | $48,433 | $48,433 | $48,433 | $48,433 | $48,433 | $48,433 | $48,43 |
| Tax credit, (Sec 29) | 4,181 | $0 | $0 | $0 | $0 | $0 | $0 | $ |
| Total rev. for farmer thru prod & co-op | | $47,894 | $48,002 | $48,154 | $48,258 | $48,335 | $48,412 | $48,46 |
| INCOME & EXPENSE STM'T | | | | | | | | |
| Revenue from Sales of Electricity | | $31,536 | $31,536 | $31,536 | $31,536 | $31,536 | $31,536 | $31,53 |
| Revenue from Sales of Leaf Meal | | $47,979 | $47,979 | $47,979 | $47,979 | $47,979 | $47,979 | $47,97 |
| Sub total revenue (A) | | $79,514 | $79,514 | $79,514 | $79,514 | $79,514 | $79,514 | $79,51 |
| Plant O&M | | $5,140 | $5,140 | $5,140 | $5,140 | $5,140 | $5,140 | $5,14 |
| Processing O&M | | $3,060 | $3,060 | $3,060 | $3,060 | $3,060 | $3,060 | $3,06 |
| Corp A&G and operating cap. interest | | $2,000 | $2,000 | $2,000 | $2,000 | $2,000 | $2,000 | $2,00 |
| Cost of Alfalfa | | $54,127 | $54,127 | $54,127 | $54,127 | $54,127 | $54,127 | $54,12 |
| Book Depreciation | | $4,668 | $4,668 | $4,668 | $4,668 | $4,668 | $4,668 | $4,66 |
| Property Tax | | $2,521 | $2,521 | $2,521 | $2,521 | $2,521 | $2,521 | $2,52 |
| Interest | | $3,011 | $2,646 | $2,132 | $1,777 | $1,516 | $1,255 | $1,06 |
| Sub Total Exp. with book deprec.& int .(F) | | $74,526 | $74,161 | $73,648 | $73,292 | $73,032 | $72,771 | $72,58 |
| Taxable Income (G=A-F) | | ($4,348) | ($12,385) | ($2,909) | $2,824 | $3,084 | $7,378 | $11,60 |
| Current Tax (K= G*tax rate) | | ($1,783) | ($5,078) | ($1,193) | $1,158 | $1,265 | $3,025 | $4,75 |
| Book Depreciation (I) | | $4,668 | $4,668 | $4,668 | $4,668 | $4,668 | $4,668 | $4,66 |
| Deferred Tax (J) | | $3,828 | $7,273 | $3,598 | $1,393 | $1,393 | ($260) | ($1,91 |
| Net Income (N= A-F-K-J) | | $2,943 | $3,158 | $3,461 | $3,671 | $3,825 | $3,979 | $4,09 |
| Return on initial equity investment, % | | 8.41 | 9.02 | 9.89 | 10.49 | 10.93 | 11.36 | 11.6 |
| DEPRECIATION | | | | | | | | |
| Tax Depr Rates (5 Year) | | 20.00% | 32.00% | 19.20% | 11.52% | 11.52% | 5.76% | |
| Tax Depr Rates (7 Year) | | 10.71% | 25.51% | 18.22% | 13.02% | 9.30% | 8.85% | 8.86 |
| Tax Depreciation (H) | | $14,004 | $22,406 | $13,444 | $8,066 | $8,066 | $4,033 | $ |
| Book Depreciation (I) | | $4,668 | $4,668 | $4,668 | $4,668 | $4,668 | $4,668 | $4,66 |
| Deferred Tax (J= [H-I]*tax rate) | | $3,828 | $7,273 | $3,598 | $1,393 | $1,393 | ($260) | ($1,91 |
| RESERVES | | | | | | | | |
| Gross Plant | $70,019 | $70,019 | $70,019 | $70,019 | $70,019 | $70,019 | $70,019 | $70,01 |
| Depr Res | $0 | $4,668 | $9,336 | $14,004 | $18,672 | $23,340 | $28,008 | $32,67 |
| Tax Res | $0 | $3,828 | $11,100 | $14,698 | $16,092 | $17,485 | $17,225 | $15,31 |
| Rate Base | $70,019 | $61,523 | $49,583 | $41,317 | $35,256 | $29,194 | $24,787 | $22,03 |
| BALANCES | | | | | | | | |
| Debt | $35,010 | $30,762 | $24,791 | $20,658 | $17,628 | $14,597 | $12,393 | $11,01 |
| Equity | $35,010 | $30,762 | $24,791 | $20,658 | $17,628 | $14,597 | $12,393 | $11,01 |
| | $70,019 | $61,523 | $49,583 | $41,317 | $35,256 | $29,194 | $24,787 | $22,03 |
| COE | | | | | | | | |
| Cost of electricity, cents per kwhr | | 5.65 | 5.65 | 5.65 | 5.65 | 5.65 | 5.65 | 5.6 |
| Tax Credit (Sec 42) | 1.50 | 0.00 | 0.00 | 0.00 | 0.00 | 0.00 | 0.00 | 0.0 |
| Resulting cost of electricity | | 5.65 | 5.65 | 5.65 | 5.65 | 5.65 | 5.65 | 5.6 |

951:40 PM1

# TABLE 7-6 50% COST SHARE PROFORMA

| | | |
|---|---|---|
| 705,194 | | |
| $46,423 | | |
| $47,558 | Yield range from Table 4.1-1 forTarget price (C-S breakeven), Tons/A | 3.8-4.7 |
| 47.00% | Yield for acreage calcu. & farmer invest, Tons/acre | 3.80 |
| 53.00% | | |
| 85% | | |
| 75 | | |
| 185,577 | | |
| 558,450 | | |
| $94 | | |
| $1,422 | | |
| $2.08 | | |
| 60.00% | | |
| $54,127 | | |
| 0 | | |

| | |
|---|---|
| COMMENTS | 1/2 cost share; no tax credits |
| Cost share | USDOE/NREL or others provide 1/2 cost; balance 50/50 between utility and alfalfa co-op |
| Leaf meal value | For CP= 30% and processed as by-pass protein; |
| Escalation | none |
| Ownership | Co-op has 50% including gasifier and processing plant; utility has HGCU and CT-CC and BOP |
| Tax | Assumes owners can used tax deferments or tax losses |
| ROE | ROE is implied in the discount rate equal to the utility return on rate base of 11.5% |
| Rtr'n on initial equity | Net income / initial equity investment |
| Ave. Rtr'n on initial eq. | Average annual net income over life of plant / initial equity investment |

| 8 | 9 | 10 | 11 | 12 | 13 | 14 | 15 | | | | |
|---|---|---|---|---|---|---|---|---|---|---|---|
| $31,536 | $31,536 | $31,536 | $31,536 | $31,536 | $31,536 | $31,536 | $31,536 | | | | |
| $47,979 | $47,979 | $47,979 | $47,979 | $47,979 | $47,979 | $47,979 | $47,979 | | | | |
| $79,514 | $79,514 | $79,514 | $79,514 | $79,514 | $79,514 | $79,514 | $79,514 | | | | |
| $5,140 | $5,140 | $5,140 | $5,140 | $5,140 | $5,140 | $5,140 | $5,140 | | | | |
| $3,060 | $3,060 | $3,060 | $3,060 | $3,060 | $3,060 | $3,060 | $3,060 | | | | |
| $2,000 | $2,000 | $2,000 | $2,000 | $2,000 | $2,000 | $2,000 | $2,000 | | | | |
| $54,127 | $54,127 | $54,127 | $54,127 | $54,127 | $54,127 | $54,127 | $54,127 | | | | |
| $0 | $0 | $0 | $0 | $0 | $0 | $0 | $0 | | | | |
| $2,521 | $2,521 | $2,521 | $2,521 | $2,521 | $2,521 | $2,521 | $2,521 | | | | |
| $66,848 | $66,848 | $66,848 | $66,848 | $66,848 | $66,848 | $66,848 | $66,848 | $0 | $0 | $0 | $0 |
| $12,667 | $12,667 | $12,667 | $12,667 | $12,667 | $12,667 | $12,667 | $12,667 | | | | |
| $5,193 | $5,193 | $5,193 | $5,193 | $5,193 | $5,193 | $5,193 | $5,193 | | | | |
| $7,473 | $7,473 | $7,473 | $7,473 | $7,473 | $7,473 | $7,473 | $7,473 | | | | |
| $3,881 | $3,575 | $3,294 | $3,035 | $2,796 | $2,576 | $2,374 | $2,187 | | | | |
| 5.65 | 5.65 | 5.65 | 5.65 | 5.65 | 5.65 | 5.65 | 5.65 | | | | |
| $2,080 | $2,115 | $2,150 | $2,185 | $2,220 | $2,255 | $2,290 | $2,325 | | | | |
| 3.04 | 3.09 | 3.15 | 3.20 | 3.25 | 3.30 | 3.35 | 3.40 | | | | |
| 11.88% | 12.08% | 12.28% | 12.48% | 12.68% | 12.88% | 13.08% | 13.28% | Ave. Return on initial equity investment= | | | 11.50% |
| $46,423 | $46,423 | $46,423 | $46,423 | $46,423 | $46,423 | $46,423 | $46,423 | | | | |
| $875 | $875 | $875 | $875 | $875 | $875 | $875 | $875 | | | | |
| $47,558 | $47,558 | $47,558 | $47,558 | $47,558 | $47,558 | $47,558 | $47,558 | | | | |
| $48,433 | $48,433 | $48,433 | $48,433 | $48,433 | $48,433 | $48,433 | $48,433 | $726,502 | Target Total | | |
| $0 | $0 | $0 | $0 | $0 | $0 | $0 | $0 | | | | |
| $48,503 | $48,538 | $48,573 | $48,608 | $48,643 | $48,678 | $48,713 | $48,748 | $726,526 | Proforma Total | | |
| | | | | | | | | 726,502 | | | |
| $31,536 | $31,536 | $31,536 | $31,536 | $31,536 | $31,536 | $31,536 | $31,536 | | | | |
| $47,979 | $47,979 | $47,979 | $47,979 | $47,979 | $47,979 | $47,979 | $47,979 | | | | |
| $79,514 | $79,514 | $79,514 | $79,514 | $79,514 | $79,514 | $79,514 | $79,514 | | | | |
| $5,140 | $5,140 | $5,140 | $5,140 | $5,140 | $5,140 | $5,140 | $5,140 | | | | |
| $3,060 | $3,060 | $3,060 | $3,060 | $3,060 | $3,060 | $3,060 | $3,060 | | | | |
| $2,000 | $2,000 | $2,000 | $2,000 | $2,000 | $2,000 | $2,000 | $2,000 | | | | |
| $54,127 | $54,127 | $54,127 | $54,127 | $54,127 | $54,127 | $54,127 | $54,127 | | | | |
| $4,668 | $4,668 | $4,668 | $4,668 | $4,668 | $4,668 | $4,668 | $4,668 | | | | |
| $2,521 | $2,521 | $2,521 | $2,521 | $2,521 | $2,521 | $2,521 | $2,521 | | | | |
| $947 | $829 | $711 | $592 | $474 | $355 | $237 | $118 | | | | |
| $72,463 | $72,345 | $72,226 | $72,108 | $71,989 | $71,871 | $71,752 | $71,634 | | | | |
| $11,719 | $11,838 | $11,956 | $12,075 | $12,193 | $12,311 | $12,430 | $12,548 | | | | |
| $4,805 | $4,853 | $4,902 | $4,951 | $4,999 | $5,048 | $5,096 | $5,145 | | | | |
| $4,668 | $4,668 | $4,668 | $4,668 | $4,668 | $4,668 | $4,668 | $4,668 | | | | |
| ($1,914) | ($1,914) | ($1,914) | ($1,914) | ($1,914) | ($1,914) | ($1,914) | ($1,914) | | | | |
| $4,160 | $4,230 | $4,300 | $4,370 | $4,440 | $4,510 | $4,580 | $4,649 | $60,366 | Total net inc | | |
| 11.88 | 12.08 | 12.28 | 12.48 | 12.68 | 12.88 | 13.08 | 13.28 | Ave. Return on initial equity investment= | | | 11.50% |
| 5.53% | | | | | | | | | | | |
| $0 | $0 | $0 | $0 | $0 | $0 | $0 | $0 | | | | |
| $4,668 | $4,668 | $4,668 | $4,668 | $4,668 | $4,668 | $4,668 | $4,668 | | | | |
| ($1,914) | ($1,914) | ($1,914) | ($1,914) | ($1,914) | ($1,914) | ($1,914) | ($1,914) | | | | |
| $70,019 | $70,019 | $70,019 | $70,019 | $70,019 | $70,019 | $70,019 | $70,019 | | | | |
| $37,343 | $42,011 | $46,679 | $51,347 | $56,015 | $60,683 | $65,351 | $70,019 | | | | |
| $13,397 | $11,483 | $9,569 | $7,655 | $5,742 | $3,828 | $1,914 | $0 | | | | |
| $19,279 | $16,524 | $13,770 | $11,016 | $8,262 | $5,508 | $2,754 | ($0) | | | | |
| $9,639 | $8,262 | $6,885 | $5,508 | $4,131 | $2,754 | $1,377 | ($0) | | | | |
| $9,639 | $8,262 | $6,885 | $5,508 | $4,131 | $2,754 | $1,377 | ($0) | | | | |
| $19,279 | $16,524 | $13,770 | $11,016 | $8,262 | $5,508 | $2,754 | ($0) | | | | |
| 5.65 | 5.65 | 5.65 | 5.65 | 5.65 | 5.65 | 5.65 | 5.65 | 5.65 | Ave | | |
| 0.00 | 0.00 | 0.00 | 0.00 | 0.00 | 0.00 | 0.00 | 0.00 | 0.00 | Ave | | |
| 5.65 | 5.65 | 5.65 | 5.65 | 5.65 | 5.65 | 5.65 | 5.65 | 5.65 | Ave | | |

Alfalfa Plant

ALFPF32F.XLS5

| | | | | | | | |
|---|---|---|---|---|---|---|---|
| Property Tax Rate | 3.60% | | Opportunity rate for farmer | 5.00% | | | Tons/yr at edge of field |
| Escalation | 0.00% | 3.80% | Return target, $/ton | $67.44 | | | Pre proc payment total |
| Discount Rate | 8.54% | | Tons/year rec'd at plant, (AR) | 683,592 | | | alfalfa pre-proc budget |
| Tax Rate | 41% | | Capacity factor | 85.00% | | | Per cent leaf |
| Debt Ratio | 50% | | TPY, stems, 15%MC (53%) | 362,304 | | | Per cent stems |
| Debt Cost | 8.60% | | TPY,leaf, 15%MC (47%) | 321,288 | Meal @ 100% | | Capacity Factor |
| C-S related escal | 0.00% | | Leaf meal, $/T, 8%MC | 161.63 | | 161.63 | Capacity, MW |
| Leaf meal escal yrs 1-5 | 0.00% | | Leaf meal, $/T, 15%MC | 149.33 | | 149.33 | Acres in production(@3.8T/A) |
| Leaf meal escal yrs 11-25 | 0.00% | | Tran.and reg stor., per AR ton | $11.27 | | | Energy, MWhrs |
| Elec escal, yrs 1-5 | 0.00% | | Shrinkage, % of AR tons | 3.16% | | | Investment per acre |
| Cost share by others, k$ | $0 | | Tran cost. | $7,704 | | | Shrinkage cost, total,k$ |
| Power or proc. Plant,k$ | $144,650 | 5 Year Tax Life | | | | | Shrinkage cost per ton |
| Power or proc. Plant,k$ | $0 | 7 Year Tax Life | | | | | Fraction of AR thru reg stor |
| Investment with AFUDC, k$ | $144,650 | | | | | | Total cost of alfal at PP |
| Pre-proc Alf. paym't, $/Ton | $64.11 | yrs 1-5 | yrs 6-10 | | | 47,979 | Program support paym't, $/A |
| Cost of electricity, $/MWhr | $83.30 | | | | | | |

| Year | | 1 | 2 | 3 | 4 | 5 | 6 | 7 |
|---|---|---|---|---|---|---|---|---|
| REVENUE,k$ | | | | | | | | |
| Sales of Electricity, k$ | | $46,519 | $46,519 | $46,519 | $46,519 | $46,519 | $46,519 | $46,519 |
| Sales of Leaf Meal, K$ | | $47,979 | $47,979 | $47,979 | $47,979 | $47,979 | $47,979 | $47,979 |
| Sub total (A) | | $94,498 | $94,498 | $94,498 | $94,498 | $94,498 | $94,498 | $94,498 |
| EXPENSES, k$ | | | | | | | | |
| Plant O&M | | $5,140 | $5,140 | $5,140 | $5,140 | $5,140 | $5,140 | $5,140 |
| Processing O&M | | $3,060 | $3,060 | $3,060 | $3,060 | $3,060 | $3,060 | $3,060 |
| Corp A&G and operating cap. interest | | $2,000 | $2,000 | $2,000 | $2,000 | $2,000 | $2,000 | $2,000 |
| Alfalfa cost at PP (prod,tran,stor,&shrink) | | $52,914 | $52,914 | $52,914 | $52,914 | $52,914 | $52,914 | $52,914 |
| Tax depreciation (E) | | $28,930 | $46,288 | $27,773 | $16,664 | $16,664 | $8,332 | $0 |
| Property Tax | | $5,207 | $5,207 | $5,207 | $5,207 | $5,207 | $5,207 | $5,207 |
| Sub total of exp. with tax deprec., before int. (B) | | $97,251 | $114,609 | $96,094 | $84,985 | $84,985 | $76,653 | $68,321 |
| Operating margin (C = A-B) | | ($2,754) | ($20,112) | ($1,597) | $9,512 | $9,512 | $17,844 | $26,176 |
| Tax effect (D = C*Tax rate) | | ($1,129) | ($8,246) | ($655) | $3,900 | $3,900 | $7,316 | $10,732 |
| Cash Flow (F = A-B+E-D) | (144,650) | $27,305 | $34,422 | $26,831 | $22,276 | $22,276 | $18,860 | $15,444 |
| PV Cash Flow | ($144,650) | $25,157 | $29,220 | $20,985 | $16,052 | $14,789 | $11,536 | $8,704 |
| DCF | $175,458 | | | | | | | |
| NET NPV and IRR | $30,808 | 12.67% | | | | | | |
| Cost of electricity (before Tx Crdt), cents per kwhr | | 8.33 | 8.33 | 8.33 | 8.33 | 8.33 | 8.33 | 8.33 |
| ALFALFA CO-OP SHARE | | | | | | | | |
| Net Income to Co-op | | $3,042 | $3,265 | $3,578 | $3,794 | $3,953 | $4,112 | $4,228 |
| Net Income, $/T @PP | | 4.45 | 4.78 | 5.23 | 5.55 | 5.78 | 6.02 | 6.18 |
| Return on initial investment for Co-op | | 8.41% | 9.03% | 9.89% | 10.49% | 10.93% | 11.37% | 11.69% |
| Farmer rev. from selling alfalfa to co-op, k$ | | $45,210 | $45,210 | $45,210 | $45,210 | $45,210 | $45,210 | $45,210 |
| Expected return on inves at oppor rate | | $1,808 | $1,808 | $1,808 | $1,808 | $1,808 | $1,808 | $1,808 |
| Return target | | $47,558 | $47,558 | $47,558 | $47,558 | $47,558 | $47,558 | $47,558 |
| Return target with invest | | $49,366 | $49,366 | $49,366 | $49,366 | $49,366 | $49,366 | $49,366 |
| Tax credit, (Sec 29) | 4,181 | $0 | $0 | $0 | $0 | $0 | $0 | $0 |
| Total rev. for farmer thru prod & co-op | | $48,252 | $48,475 | $48,788 | $49,004 | $49,163 | $49,322 | $49,438 |
| INCOME & EXPENSE STM'T | | | | | | | | |
| Revenue from Sales of Electricity | | $46,519 | $46,519 | $46,519 | $46,519 | $46,519 | $46,519 | $46,519 |
| Revenue from Sales of Leaf Meal | | $47,979 | $47,979 | $47,979 | $47,979 | $47,979 | $47,979 | $47,979 |
| Sub total revenue (A) | | $94,498 | $94,498 | $94,498 | $94,498 | $94,498 | $94,498 | $94,498 |
| Plant O&M | | $5,140 | $5,140 | $5,140 | $5,140 | $5,140 | $5,140 | $5,140 |
| Processing O&M | | $3,060 | $3,060 | $3,060 | $3,060 | $3,060 | $3,060 | $3,060 |
| Corp A&G and operating cap. interest | | $2,000 | $2,000 | $2,000 | $2,000 | $2,000 | $2,000 | $2,000 |
| Cost of Alfalfa | | $52,914 | $52,914 | $52,914 | $52,914 | $52,914 | $52,914 | $52,914 |
| Book Depreciation | | $9,643 | $9,643 | $9,643 | $9,643 | $9,643 | $9,643 | $9,643 |
| Property Tax | | $5,207 | $5,207 | $5,207 | $5,207 | $5,207 | $5,207 | $5,207 |
| Interest | | $6,220 | $5,465 | $4,405 | $3,670 | $3,132 | $2,593 | $2,202 |
| Sub Total Exp. with book deprec.& int .(F) | | $84,185 | $83,430 | $82,369 | $81,635 | $81,097 | $80,558 | $80,167 |
| Taxable Income (G=A-F) | | ($8,974) | ($25,577) | ($6,001) | $5,842 | $6,381 | $15,251 | $23,974 |
| Current Tax (K= G*tax rate) | | ($3,679) | ($10,487) | ($2,461) | $2,395 | $2,616 | $6,253 | $9,829 |
| Book Depreciation (I) | | $9,643 | $9,643 | $9,643 | $9,643 | $9,643 | $9,643 | $9,643 |
| Deferred Tax (J) | | $7,908 | $15,024 | $7,433 | $2,878 | $2,878 | ($538) | ($3,954) |
| Net Income (N= A-F-K-J) | | $6,085 | $6,530 | $7,156 | $7,589 | $7,907 | $8,224 | $8,455 |
| Return on initial equity investment, % | | 8.41 | 9.03 | 9.89 | 10.49 | 10.93 | 11.37 | 11.69 |
| DEPRECIATION | | | | | | | | |
| Tax Depr Rates (5 Year) | | 20.00% | 32.00% | 19.20% | 11.52% | 11.52% | 5.76% | |
| Tax Depr Rates (7 Year) | | 10.71% | 25.51% | 18.22% | 13.02% | 9.30% | 8.85% | 8.86% |
| Tax Depreciation (H) | | $28,930 | $46,288 | $27,773 | $16,664 | $16,664 | $8,332 | $0 |
| Book Depreciation (I) | | $9,643 | $9,643 | $9,643 | $9,643 | $9,643 | $9,643 | $9,643 |
| Deferred Tax (J= [H-I]*tax rate) | | $7,908 | $15,024 | $7,433 | $2,878 | $2,878 | ($538) | ($3,954) |
| RESERVES | | | | | | | | |
| Gross Plant | $144,650 | $144,650 | $144,650 | $144,650 | $144,650 | $144,650 | $144,650 | $144,650 |
| Depr Res | $0 | $9,643 | $19,287 | $28,930 | $38,573 | $48,217 | $57,860 | $67,503 |
| Tax Res | $0 | $7,908 | $22,932 | $30,365 | $33,243 | $36,122 | $35,584 | $31,630 |
| Rate Base | $144,650 | $127,099 | $102,431 | $85,355 | $72,833 | $60,312 | $51,206 | $45,517 |
| BALANCES | | | | | | | | |
| Debt | $72,325 | $63,550 | $51,216 | $42,678 | $36,417 | $30,156 | $25,603 | $22,758 |
| Equity | $72,325 | $63,550 | $51,216 | $42,678 | $36,417 | $30,156 | $25,603 | $22,758 |
| | $144,650 | $127,099 | $102,431 | $85,355 | $72,833 | $60,312 | $51,206 | $45,517 |
| COE | | | | | | | | |
| Cost of electricity, cents per kwhr | | 8.33 | 8.33 | 8.33 | 8.33 | 8.33 | 8.33 | 8.33 |
| Tax Credit (Sec 42) | 1.50 | 0.00 | 0.00 | 0.00 | 0.00 | 0.00 | 0.00 | 0.00 |
| Resulting cost of electricity | | 8.33 | 8.33 | 8.33 | 8.33 | 8.33 | 8.33 | 8.33 |

# TABLE 7-7 NO COST SHARE PROFORMA

| | |
|---|---|
| 705,194 | |
| $45,210 | |
| $47,558 | Yield range from Table 4.1-1 forTarget price (C-S breakeven), Tons/A 3.8-4.7 |
| 47.00% | Yield for acreage calcu. & farmer invest, Tons/acre 3.80 |
| 53.00% | |
| 85% | |
| 75 | |
| 185,577 | |
| 558,450 | |
| $195 | |
| $1,385 | |
| $2.03 | |
| 60.00% | |
| $52,914 | |
| 0 | |

| | |
|---|---|
| COMMENTS | No cost share; no tax credits |
| Cost share | USDOE/NREL or others provide no cost share; balance 50/50 between utility and alfalfa co-op |
| Leaf meal value | For CP= 30% and processed as by-pass protein; |
| Escalation | none |
| Ownership | Co-op has 50% including gasifier and processing plant; utility has HGCU and CT-CC and BOP |
| Tax | Assumes owners can used tax deferments or tax losses |
| ROE | ROE is implied in the discount rate equal to the utility return on rate base of 11.5% |
| Rtr'n on initial equity | Net income / initial equity investment |
| Ave. Rtr'n on initial eq. | Average annual net income over life of plant / initial equity investment |

| 8 | 9 | 10 | 11 | 12 | 13 | 14 | 15 | | | | |
|---|---|---|---|---|---|---|---|---|---|---|---|
| $46,519 | $46,519 | $46,519 | $46,519 | $46,519 | $46,519 | $46,519 | $46,519 | | | | |
| $47,979 | $47,979 | $47,979 | $47,979 | $47,979 | $47,979 | $47,979 | $47,979 | | | | |
| $94,498 | $94,498 | $94,498 | $94,498 | $94,498 | $94,498 | $94,498 | $94,498 | | | | |
| $5,140 | $5,140 | $5,140 | $5,140 | $5,140 | $5,140 | $5,140 | $5,140 | | | | |
| $3,060 | $3,060 | $3,060 | $3,060 | $3,060 | $3,060 | $3,060 | $3,060 | | | | |
| $2,000 | $2,000 | $2,000 | $2,000 | $2,000 | $2,000 | $2,000 | $2,000 | | | | |
| $52,914 | $52,914 | $52,914 | $52,914 | $52,914 | $52,914 | $52,914 | $52,914 | | | | |
| $0 | $0 | $0 | $0 | $0 | $0 | $0 | $0 | | | | |
| $5,207 | $5,207 | $5,207 | $5,207 | $5,207 | $5,207 | $5,207 | $5,207 | | | | |
| $68,321 | $68,321 | $68,321 | $68,321 | $68,321 | $68,321 | $68,321 | $68,321 | $0 | $0 | $0 | $0 |
| $26,176 | $26,176 | $26,176 | $26,176 | $26,176 | $26,176 | $26,176 | $26,176 | | | | |
| $10,732 | $10,732 | $10,732 | $10,732 | $10,732 | $10,732 | $10,732 | $10,732 | | | | |
| $15,444 | $15,444 | $15,444 | $15,444 | $15,444 | $15,444 | $15,444 | $15,444 | | | | |
| $8,019 | $7,389 | $6,807 | $6,272 | $5,779 | $5,324 | $4,905 | $4,519 | | | | |
| 8.33 | 8.33 | 8.33 | 8.33 | 8.33 | 8.33 | 8.33 | 8.33 | | | | |
| $4,300 | $4,372 | $4,444 | $4,516 | $4,588 | $4,661 | $4,733 | $4,805 | | | | |
| 6.29 | 6.40 | 6.50 | 6.61 | 6.71 | 6.82 | 6.92 | 7.03 | | | | |
| 11.89% | 12.09% | 12.29% | 12.49% | 12.69% | 12.89% | 13.09% | 13.29% | Ave. Return on initial equity investment= | | | 11.50% |
| $45,210 | $45,210 | $45,210 | $45,210 | $45,210 | $45,210 | $45,210 | $45,210 | | | | |
| $1,808 | $1,808 | $1,808 | $1,808 | $1,808 | $1,808 | $1,808 | $1,808 | | | | |
| $47,558 | $47,558 | $47,558 | $47,558 | $47,558 | $47,558 | $47,558 | $47,558 | | | | |
| $49,366 | $49,366 | $49,366 | $49,366 | $49,366 | $49,366 | $49,366 | $49,366 | $740,496 | Target Total | | |
| $0 | $0 | $0 | $0 | $0 | $0 | $0 | $0 | | | | |
| $49,510 | $49,582 | $49,654 | $49,726 | $49,798 | $49,871 | $49,943 | $50,015 | $740,541 | Proforma Total | | |
| | | | | | | | | 740,496 | | | |
| $46,519 | $46,519 | $46,519 | $46,519 | $46,519 | $46,519 | $46,519 | $46,519 | | | | |
| $47,979 | $47,979 | $47,979 | $47,979 | $47,979 | $47,979 | $47,979 | $47,979 | | | | |
| $94,498 | $94,498 | $94,498 | $94,498 | $94,498 | $94,498 | $94,498 | $94,498 | | | | |
| $5,140 | $5,140 | $5,140 | $5,140 | $5,140 | $5,140 | $5,140 | $5,140 | | | | |
| $3,060 | $3,060 | $3,060 | $3,060 | $3,060 | $3,060 | $3,060 | $3,060 | | | | |
| $2,000 | $2,000 | $2,000 | $2,000 | $2,000 | $2,000 | $2,000 | $2,000 | | | | |
| $52,914 | $52,914 | $52,914 | $52,914 | $52,914 | $52,914 | $52,914 | $52,914 | | | | |
| $9,643 | $9,643 | $9,643 | $9,643 | $9,643 | $9,643 | $9,643 | $9,643 | | | | |
| $5,207 | $5,207 | $5,207 | $5,207 | $5,207 | $5,207 | $5,207 | $5,207 | | | | |
| $1,957 | $1,713 | $1,468 | $1,223 | $979 | $734 | $489 | $245 | | | | |
| $79,922 | $79,677 | $79,433 | $79,188 | $78,943 | $78,699 | $78,454 | $78,209 | | | | |
| $24,219 | $24,464 | $24,708 | $24,953 | $25,197 | $25,442 | $25,687 | $25,931 | | | | |
| $9,930 | $10,030 | $10,130 | $10,231 | $10,331 | $10,431 | $10,532 | $10,632 | | | | |
| $9,643 | $9,643 | $9,643 | $9,643 | $9,643 | $9,643 | $9,643 | $9,643 | | | | |
| ($3,954) | ($3,954) | ($3,954) | ($3,954) | ($3,954) | ($3,954) | ($3,954) | ($3,954) | | | | |
| $8,600 | $8,744 | $8,888 | $9,033 | $9,177 | $9,321 | $9,466 | $9,610 | $124,783 | Total net inc | | |
| 11.89 | 12.09 | 12.29 | 12.49 | 12.69 | 12.89 | 13.09 | 13.29 | Ave. Return on initial equity investment= | | | 11.50% |
| 5.53% | | | | | | | | | | | |
| $0 | $0 | $0 | $0 | $0 | $0 | $0 | $0 | | | | |
| $9,643 | $9,643 | $9,643 | $9,643 | $9,643 | $9,643 | $9,643 | $9,643 | | | | |
| ($3,954) | ($3,954) | ($3,954) | ($3,954) | ($3,954) | ($3,954) | ($3,954) | ($3,954) | | | | |
| $144,650 | $144,650 | $144,650 | $144,650 | $144,650 | $144,650 | $144,650 | $144,650 | | | | |
| $77,147 | $86,790 | $96,433 | $106,077 | $115,720 | $125,363 | $135,007 | $144,650 | | | | |
| $27,676 | $23,723 | $19,769 | $15,815 | $11,861 | $7,908 | $3,954 | ($0) | | | | |
| $39,827 | $34,137 | $28,448 | $22,758 | $17,069 | $11,379 | $5,690 | $0 | | | | |
| $19,913 | $17,069 | $14,224 | $11,379 | $8,534 | $5,690 | $2,845 | $0 | | | | |
| $19,913 | $17,069 | $14,224 | $11,379 | $8,534 | $5,690 | $2,845 | $0 | | | | |
| $39,827 | $34,137 | $28,448 | $22,758 | $17,069 | $11,379 | $5,690 | $0 | | | | |
| 8.33 | 8.33 | 8.33 | 8.33 | 8.33 | 8.33 | 8.33 | 8.33 | 8.33 | Ave | | |
| 0.00 | 0.00 | 0.00 | 0.00 | 0.00 | 0.00 | 0.00 | 0.00 | 0.00 | Ave | | |
| 8.33 | 8.33 | 8.33 | 8.33 | 8.33 | 8.33 | 8.33 | 8.33 | 8.33 | Ave | | |

TABLE 7-8 LEGEND FOR FIGURES 7-5,7-6,7-7 ALFPF32F.XLS5/

| PARAMETER | EXAMPLE VALUE | | C( |
|---|---|---|---|
| Alfalfa Plant | | | |
| Property Tax Rate | 3.60% | | Typical for utility in MN |
| Escalation | 0.00% | | Escalation of costs--no |
| Discount Rate | 8.54% | | Approximation of NSP |
| Tax Rate | 41% | | Combined Federal and |
| Debt Ratio | 50% | | Assumed half debt; util |
| Debt Cost | 8.60% | | Typical of NSP averag |
| C-S related escal | 0.00% | | Escalation of costs--no |
| Leaf meal escal yrs 1-5 | 0.00% | | Escalation of costs--no |
| Leaf meal escal yrs 11-25 | 0.00% | | Escalation of costs--no |
| Elec escal, yrs 1-5 | 0.00% | | Escalation of costs--no |
| Cost share by others, k$ | $0 | | Cost share by other th |
| Power or proc. Plant,k$ | $144,650 | 5 Year Tax Life | Investment cost qualifi |
| Power or proc. Plant,k$ | $0 | 7 Year Tax Life | |
| Investment with AFUDC, k$ | $144,650 | | Total investment less c |
| Pre-proc Alf. paym't, $/Ton | $64.11 | | Value per ton alfalfa (1 |
| Cost of electricity, $/MWhr | $83.30 | | Minimun revenue rate |
| | | | |
| Opportunity rate for farmer | 5.00% | | Return to farmer on inv |
| Return target, $/ton | $67.44 | | Breakeven value of alf |
| Tons/year rec'd at plant, (AR) | 683,592 | | Tons per year received |
| Capacity factor | 85.00% | | Power plant capacity f |
| TPY, stems, 15%MC (53%) | 362,304 | | Tons per year of stems |
| TPY,leaf, 15%MC (47%) | 321,288 | | Tons per year of leaf a |
| Leaf meal, $/T, 8%MC | 161.63 | | Value of leaf meal as b |
| Leaf meal, $/T, 15%MC | 149.33 | | Value of leaf meal as b |
| Tran.and reg stor., per AR ton | $11.27 | | Cost of storage and tra |
| Shrinkage, % of AR tons | 3.16% | | Per cent of as received |
| Tran. and stor. cost.,k$ | $7,704 | | Cost for stor. and tran. |
| | | | |
| Tons/yr at edge of field | 705,194 | | Tons required to be pr |
| Pre proc payment total,k$ | $45,210 | | Preprocessing credit fo |
| alfalfa pre-proc budget,k$ | $47,558 | | Preprocessing budget |
| Per cent leaf | 47.00% | | Leaf material yield |
| Per cent stems | 53.00% | | Stem fraction |
| Capacity Factor | 85% | | Capacity factor of pow |
| Capacity, MW | 75 | | Net output of power pl |
| Acres in production(@3.8T/A) | 185,577 | | Acres required to prod |
| Energy, MWhrs | 558,450 | | Net MWhrs per year of |
| Investment per acre | $195 | | Farmer investment per |
| Shrinkage cost, total,k$ | $1,385 | | Cost of alfalfa at target |
| Shrinkage cost per ton | $2.03 | | Shrinkage cost per ton |
| Fraction of AR thru reg stor | 60.00% | | Fraction of alfalfa prod |
| Total cost of alfal at PP | $52,914 | | Cost of alfalfa at plan |
| Program support paym't, $/A | 0 | | USDA price support f |
| | | | |
| Yield range from Table 4.1-1(Vol. 1) for Target price (C-S breakeven), Tons/A | 3.8-4.7 | | Region specific yields |
| | | | |
| Yield for acreage calcu. & farmer invest, tons /acre | 3.80 | | Lower end yield used f |

9510:15 AM1

**MENTS**

pplies to entire booked value
used
ue
ate rates
s are typically close to this value
ate
used
used
used
used
utility and co-op
g for accelerated depreciation (under 80MW)

t share
moisture content, prime alfalfa) credited to farmer upon delivery to regional storage site
n electricity sales to meet return on initial equity and target for co-op

tment in co-op (co-op controls its portion of equity balance)
to match return on continous corn-soybean rotation
plant gate
or
quired for gasifier, 15% moisture
ing at plant at 15% moisture content
ass protein (after processing @ 8% moisture content)
ass protein corrected to 15% moisture content
port of stored alfalfa prorated over tons received at plant
falfa assumed not available after storage ( 5% of the 60% that is stored)
as received tons

ced to accomodate shrinkage
ns at edge of field
tons at edge of field, i.e., $67.44 times the tons at edge of field

lant

705,194 tons of alfalfa with yield at 3.8 tons/acre
wer plant output
e to participate in co-op (Note: amount differs depending on cost share by others)
ce that is lost to shrinkage
alfalfa received at plant
on that is stored
e., preprocessing payment plus storage and transportation plus shrinkage
energy crop on CRP land --none used for production of alfalfa

d for biomass supply curve

proforma acre calulations. (Note: yield not used directly in proforma only total no. of tons required)

*Table 7-9 Summary of Cost Share and Tax Credit Influence*

| Cost Share by Others | Tax Credit | | COE, cents/kWhr (94 constant $) |
|---|---|---|---|
| | Sec 29 | Sec 42 | |
| 0 | no | no | 8.40 |
| 0 | yes | yes | 7.40 |
| 1/3 | no | no | 6.52 |
| 1/3 | yes | yes | 5.50 |
| 1/2 | no | no | 5.60 |
| 1/2 | yes | yes | 4.60 |

## 7.7 Plant Life

The book life selected for this plant was 15 years. The components for the plant would likely have a 30 year life, but for a demonstration plant a 15 year life was judged appropriate to allow investors the option of recovering there investment over a shorter period of time. The tax life for the plant is 5 years. This is established by the IRS for biomass under 80 Mwe in size.

## 7.8 nth Plant

Much of the data available to compare with that of this concept is based on a 30 year plant life. To provide a basis for comparison, an nth plant with an investment cost of 80% of the demonstration plant cost has been developed. The resulting investment cost of $1543/kw is in line with other estimates of gasification technologies at a mature stage of application. The COE for this plant is 6.61 cents /kWhr for the alfalfa target price of $67.44 (see Table 5-1, Page 12).

## 7.9 Adequacy Of Return On Equity

The variability or volatility of the by-pass protein market will influence the year to year return for a project like this. The leaf meal market exposure requires a return on equity that reflects the possibility of market volatility. A return of 11.5% on initial equity was judged to be appropriate for this situation.

The risk of new technology is managed by involving the suppliers of new technology until the technology has proven reliable, rather than by excessively high investment return targets. It is anticipated that the new technology suppliers would take an equity position in the project during the early years, with an agreement to be bought out upon achieving reliable operation of the new technology equipment. This pre-defined buy-out would probably take place in the first 3-5 years.

# CHAPTER 8. BUSINESS STRATEGY

## 8.1 Broad Interest In Biomass Energy

This joint venture would likely be initiated after consideration of a) the requests for proposals for pursuing the commercialization of the new conversion technologies; b) the interest in introducing biomass based electricity generation on a utility scale; and c) the desire by farmers to add economically viable plant diversity improvements to their crop rotation systems.

An overall plan for developing biomass energy is outlined in USDOE/NREL's 5 year plan. Significant dedicated fuel supply system research has been accomplished. Conversion technology development on gasifier and hot-gas-clean-up has been completed and market conditioning for permitting and environmental analysis has been done. Various studies such as this feasibility study have been done on a collaborative basis between government and other interested parties. The next step for this program is to conduct the initial phases of design and permitting activities.

## 8.2 Integrated Biomass Energy Concept

A long term supply of biomass is essential to a project like this with a large capital investment. For farmers to supply the biomass feedstock over the long term, they must recover their production costs, but more importantly they desire to improve their investment returns. Adding value by processing can provide the improved investment return.

The feasibility study has shown that the separation of the leaf from the stem material can be done with commercially available equipment. The separation of the leaf material not only segregates the high protein leaf material, but this same process removes the portion of the plant that would be high in fuel bound nitrogen, thus improving the emissions relative to using the whole alfalfa plant. Processing the leaf material by heat treating it with extraction steam from the steam turbine power plant island produces a co-product that has significant added value.

## 8.3 Respond To RFP's

It is anticipated that In December 1994 NREL will be issuing a competitive RFP to solicit candidate projects for the detailed engineering design and permitting activities, as a first step to conducting a demonstration project. In February or March 1995, the generating resource planning group of NSP will probably issue an RFP for 50MWe of biomass capacity. These two RFP's would be key opportunities for the next development steps toward commercial demonstration of this concept.

## 8.4 Solicit Cost Share

In addition to the cost share that is anticipated through the USDOE/NREL RFP process, other sources of cost share or cost stabilization (e.g., property tax) will also need to be explored. These would include discussions with local government units on property tax levels to determine a level that both the project can absorb and the taxing jurisdictions can accept.
There would need to be discussions with USDA organizations to determine how the new crop rotation systems would be considered within the existing support programs for corn and Conservation Reserve.

## 8.5 Unique Characteristics Of The Venture

There are many aspects of this project that need to be conveyed to the various organizations that have an interest in this project. First is the fact that this concept provides a significant step forward in providing an integrated biomass and energy system from an agriculturally sustainable crop production approach. This concept also provides rural economic development by adding value to locally produced crops.

These and other topics are often familiar when discussed alone, but when combined, as they are in this concept, the synergistic effect needs to be emphasized. The topics include:

- Use of an existing crop and crop production capability
- Processing and conversion technologies chosen specifically for efficient use of material
- A joint venture arrangement that provides incentives for partners to produce high quality products
- Expanding market potential of the co-product that can be developed using the initial investment
- Reducing new technology uncertainty by having new technology suppliers participate as stakeholders until processes and equipment are operating reliably
    - Products that can be sold outside production region
    - An environmental assistance to the region

This concept does face more than just financial challenges. There are a number of organizational and institutional positions that must be addressed. These include:

- Utilities need to understand benefits of integrated biomass energy based projects compared to non-integrated approaches

- Farmers need to understand benefit of long term commitments on cropping systems within a cooperative structure that replaces a more individually controlled marketing approach.
- Equipment suppliers need to understand new system interfaces consider for these integrated approaches to achieve better economics and improved efficiencies.
- Government agencies need to understand challenges of energy policy strategy implementation for specific projects

# CHAPTER 9. PROJECT DEVELOPMENT

## 9.1 Schedule

A schedule of activities has been developed to respond to these anticipated activities. This concept could provide an competitive response to these two RFP's, but a joint venture team must be assembled. Responses will probably be due 120 days after the RFP's are issued. The schedule in Figures 9-1 through 9-3 show the anticipated activities, and indicate that by the end of 1995 agreements could be in place between the joint venture team and both USDOE/NREL and the NSP resource planning group.

## 9.2 Validate Key Cost And Pricing Assumptions

There are several key design bases that need to be established very early in the project. These process validation tests can be conducted at existing facilities and the results will provide the details for business option evaluations, engineering design activities and permit application planning. These steps are shown in Figure 9-2.

Fractionation tests of alfalfa leaf and stem separation will be done to establish the crude protein concentration level that will be used for co-product market studies. This same step will also provide leaf material that can be used for animal feeding trials to provide the data for co-product value verification. By-pass protein production process validation tests will also provide co-product value verification.

The stem material that is produced can be used for gas characterization tests in IGT's pilot facilities in Chicago, Illinois and at Tampella's facilities in Tampere Finland. Once the gasification trials have provided the gas characterization data, the Lo-Btu gas combustor tests can be conducted and detailed engineering can begin. The pilot facility tests will also provide ash for soil amendment tests to be done, so the value of returning the ash to the soil can be established.

| Name | Duration |
|---|---|
| ORGANIZATION OF PROJECT TEAM | 117d |
| Review feasibility study | 30d |
| Initial organizational meeting | 1d |
| Draft team agreement | 30d |
| Review NSP Resource Planning info | 32d |
| Review USDOE RFP program intent | 37d |
| Decision to respond | 1d |
| Finalize team agreement | 60d |
| Develop financing plan | 94d |
| PREPARE RESPONSE TO USDOE | 220d |
| DOE issues RFP | 0d |
| Scope response to RFP | 10d |
| Dev. detailed work plan for DOE RFP | 16d |
| Prepare design basis data development s | 42d |
| Prepare permitting section | 42d |
| Prepare detailed engineering design secti | 42d |
| Prepare detailed contruction planning | 42d |
| Assemble RFP response | 3d |
| Review draft | 15d |
| final edit and printing | 10d |
| Proposal due | 1d |
| DOE evaluates | 90d |
| Notification of award | 1d |
| Negotiate contract | 60ed |
| section dur( PROPOSAL PREP) | 120ed |
| PREPARE RESPONSE to NSP RFP | 237d |
| NSP issues RFP | 0d |
| Scope response to RFP | 10d |
| Develop detailed work plan for NSP RFP | 15d |
| Prepare feedstock supply section | 53d |
| Prepare conversion technology section | 53d |
| Prepare facility layout section | 53d |
| Assemble RFP response | 3d |
| Review draft | 15d |
| Issue proposal | 1d |
| Proposal prep duration | 120ed |
| NSP evaluates | 90d |
| Notification of award | 1d |
| Negotiate contract | 60d |

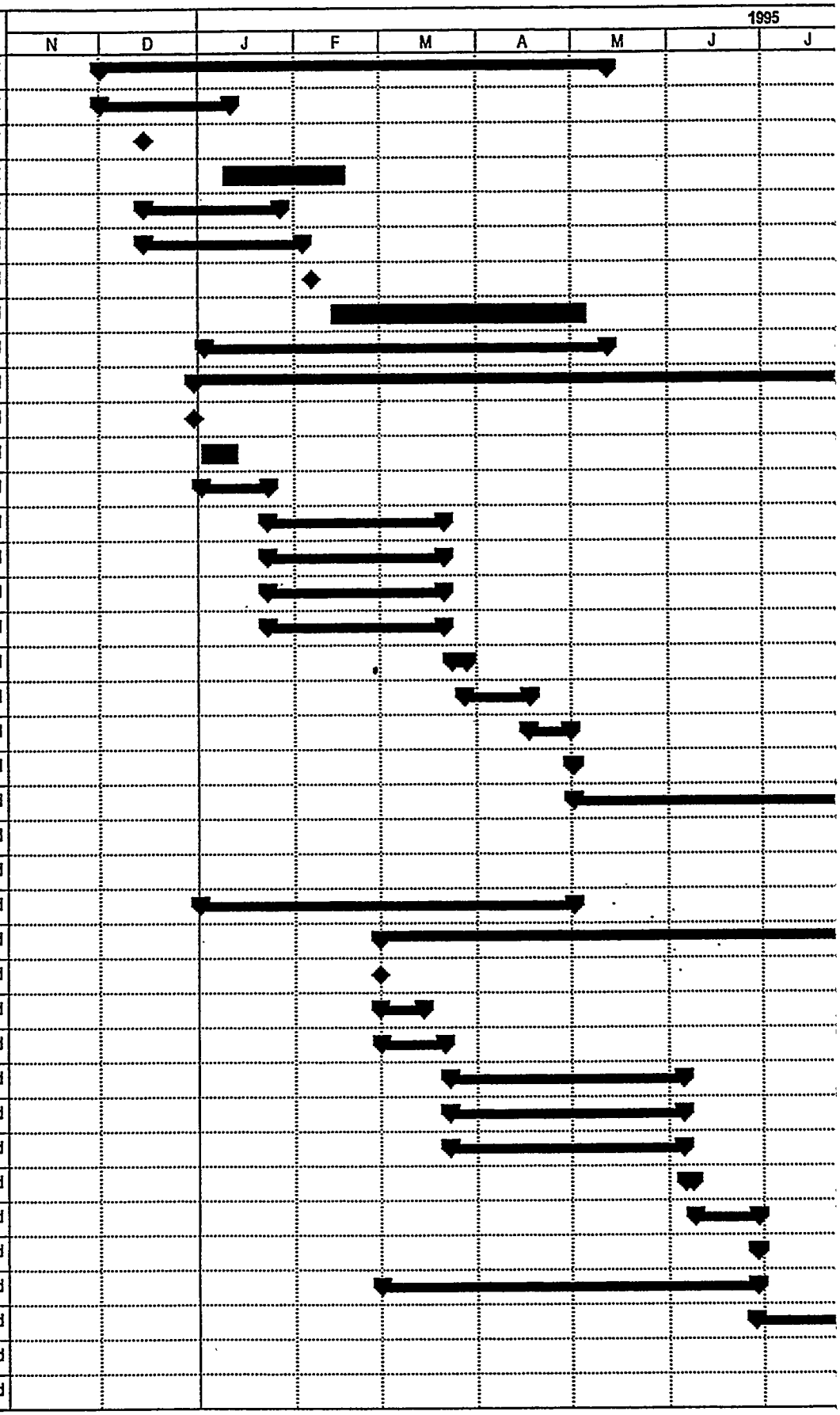


oject: ALFAGAS
ıte: 3/8/95

Critical Noncritical Progress

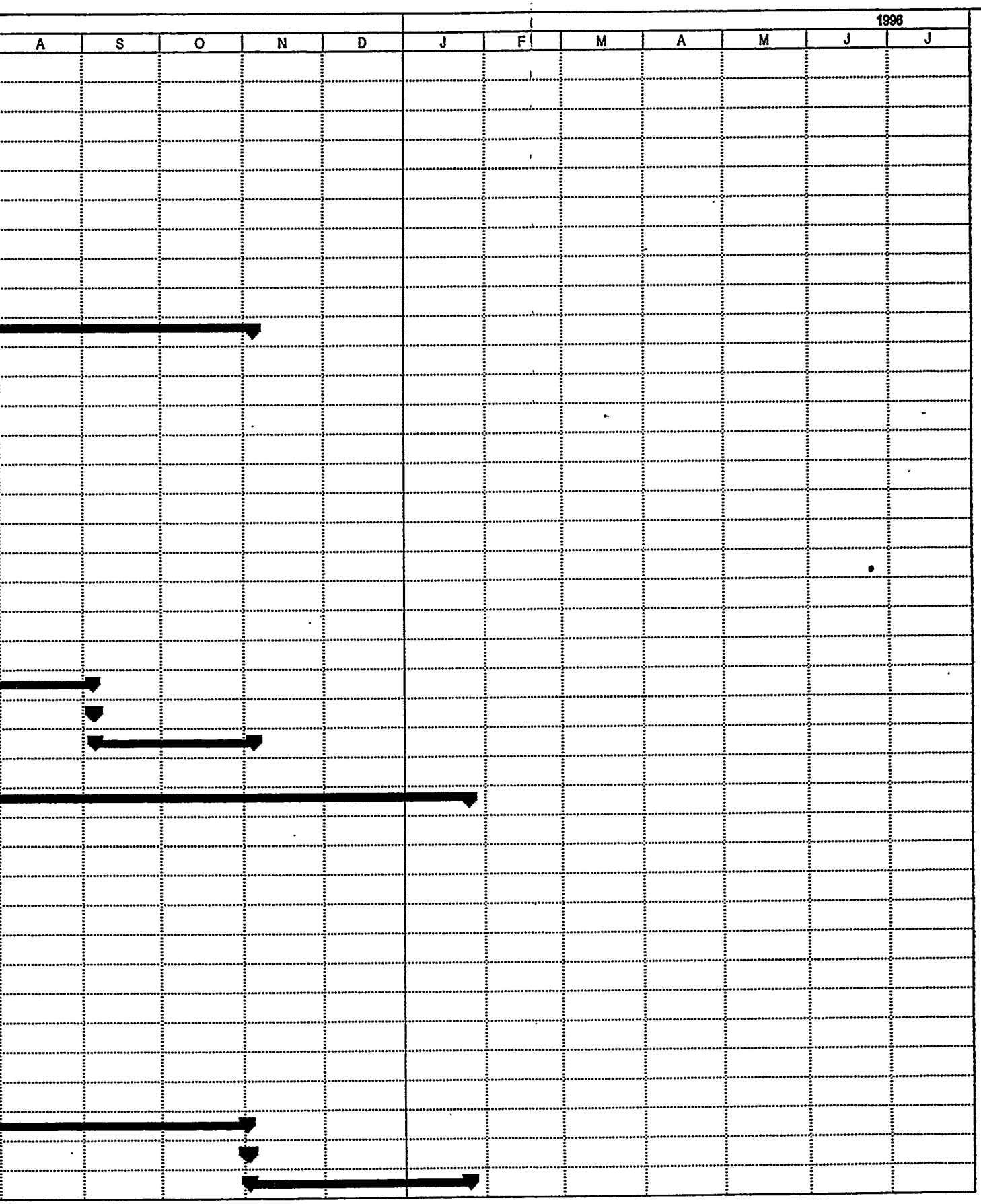


Milestone ◆ Summary Rolled Up ◇

**Figure 9-1 Project Schedule (Early activities)**

| ) | Name | Duration |
|---|---|---|
| ) | INITIAL PROCESS VALIDATION TESTS | 433d |
| 1 | File CIP proposal | 1d |
| 2 | MNPUC review of CIP proposal | 35d |
| 3 | Mn PUC decision on CIP proposal | 1d |
| 4 | Initial leaf/stem separation test | 20d |
| 5 | Initial bypass-protein proc. test | 20d |
| 6 | Initial feeding trial | 44d |
| 7 | Initial ash/soil ammendment test | 262d |
| 8 | Design first train of sep/ proc | 90ed |
| 9 | Install first train of sep/proc equip | 180ed |
| ) | | |
| 1 | DOE COST SHARE PHASE I | 648d |
| 2 | Design bases specification | 180d |
| 3 | Permitting work | 730ed |
| 4 | Detailed engineering | 365ed |
| 5 | Financing plan development | 365d |
| 6 | Biomass shed development planning | 730ed |
| 7 | Customer identification and marketing pla | 730ed |
| 8 | Detailed construction planing | 180ed |
| 9 | Equipment spec dev/ prep proc. bid | 180ed |
| ) | section duration | 730ed |
| 1 | Phase I review/ Phase II plan. with DOE | 90ed |
| 2 | Award for Phase II | 1d |
| 3 | Revise NREL agreement | 60d |
| 4 | | |

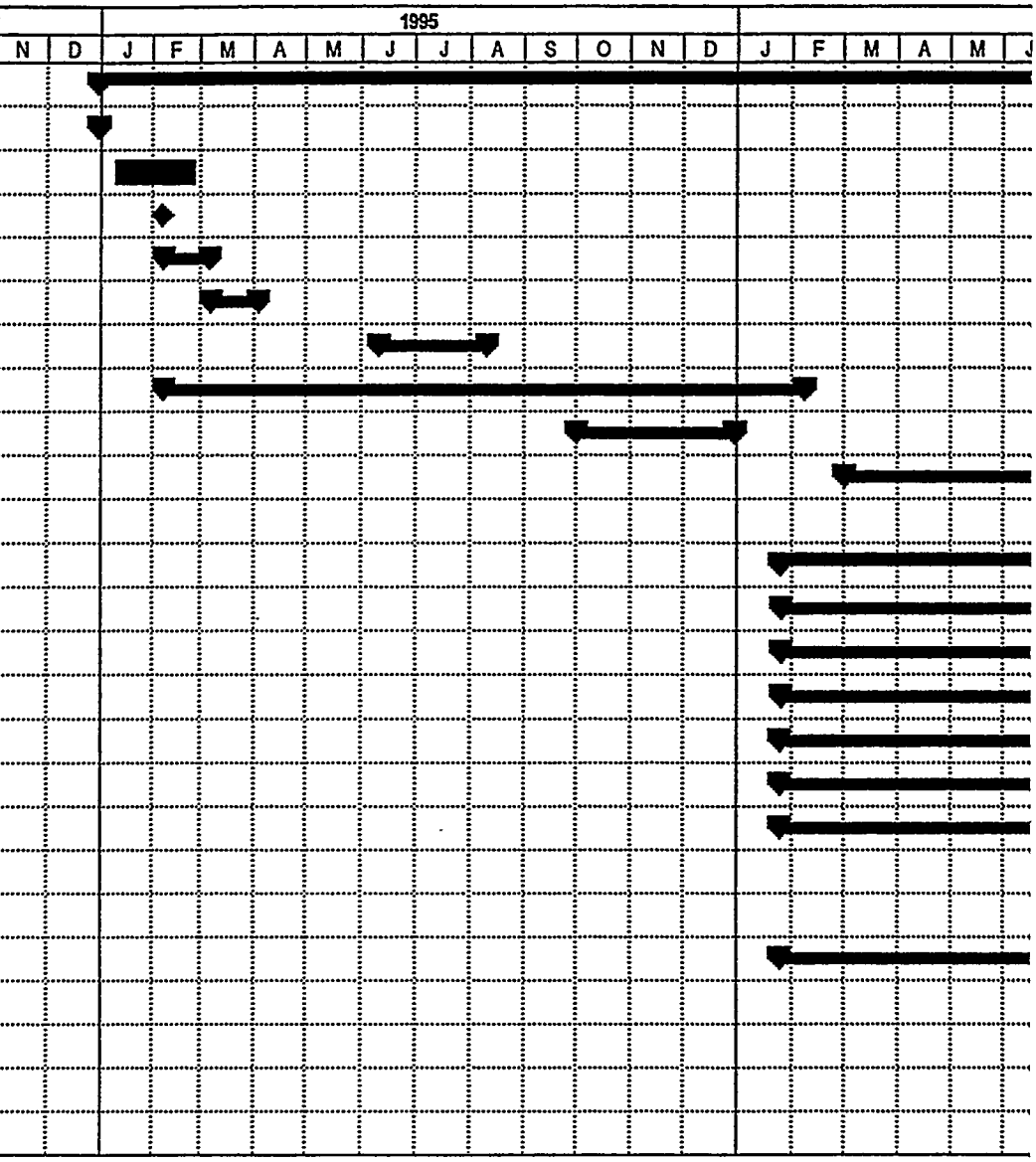


'oject: ALFAGAS
ate: 3/8/95

Critical Noncritical Progress

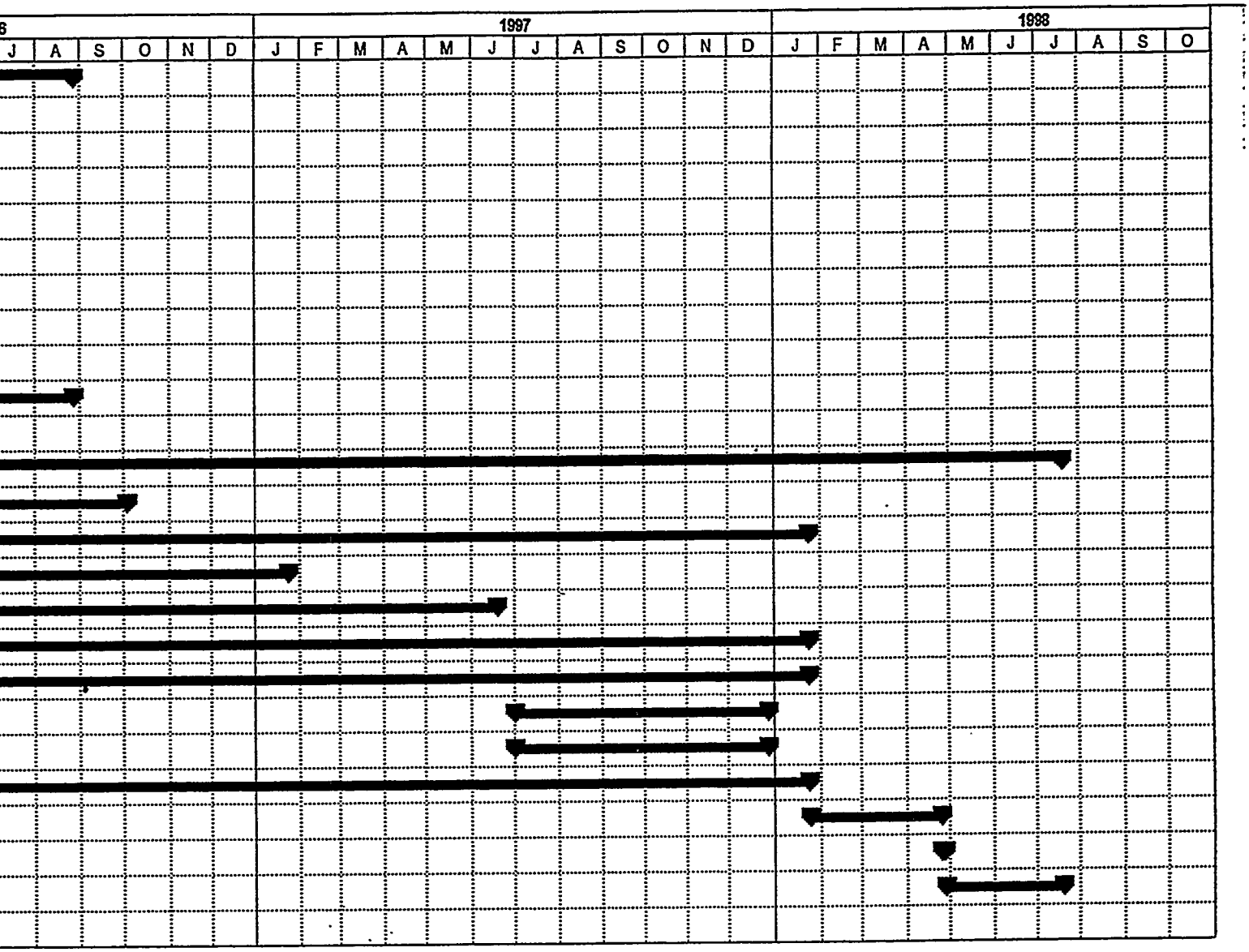


Milestone ◆ Summary Rolled Up ◇

**Figure 9-2 Project Schedule (mid-project activities)**

| Name | Duration |
|---|---|
| PHASE II; PROCURE. CONSTRUCTION, OP | 490d |
| Equipment procurement | 180d |
| Construction | 548ed |
| Startup | 120ed |
| Operation | 4d |
| | |
| BIOMASS SHED DEVELOPMENT | 1288d |
| Contract for first 10000 acres | 270ed |
| First year growth for 10000 A | 120ed |
| Process/co-fire first year stem material | 240ed |
| Second year growth of 1st 10000A | 182ed |
| Process and co-fire 2nd year growth | 175d |
| Contract for 40,000 acres | 273ed |
| Third year growth | 182ed |
| Process and co-fire 3rd year growth | 308ed |
| Contract for 110,000 acres | 287ed |
| Fourth year growth | 168ed |
| Process 4th yr. growth | 365ed |
| Fifth year growth | 150ed |

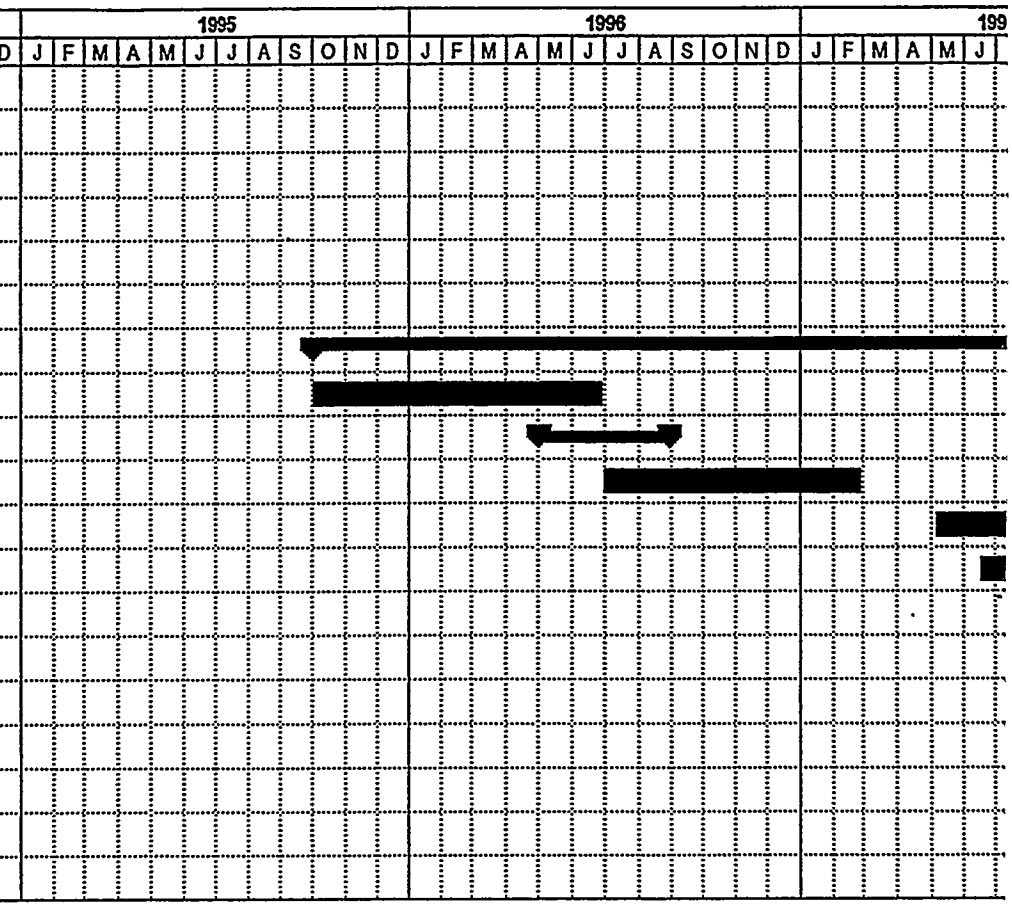


oject: ALFAGAS
ate: 3/13/95

Critical Noncritical Progress

Figure 9-3 Project Schedule (Facility c

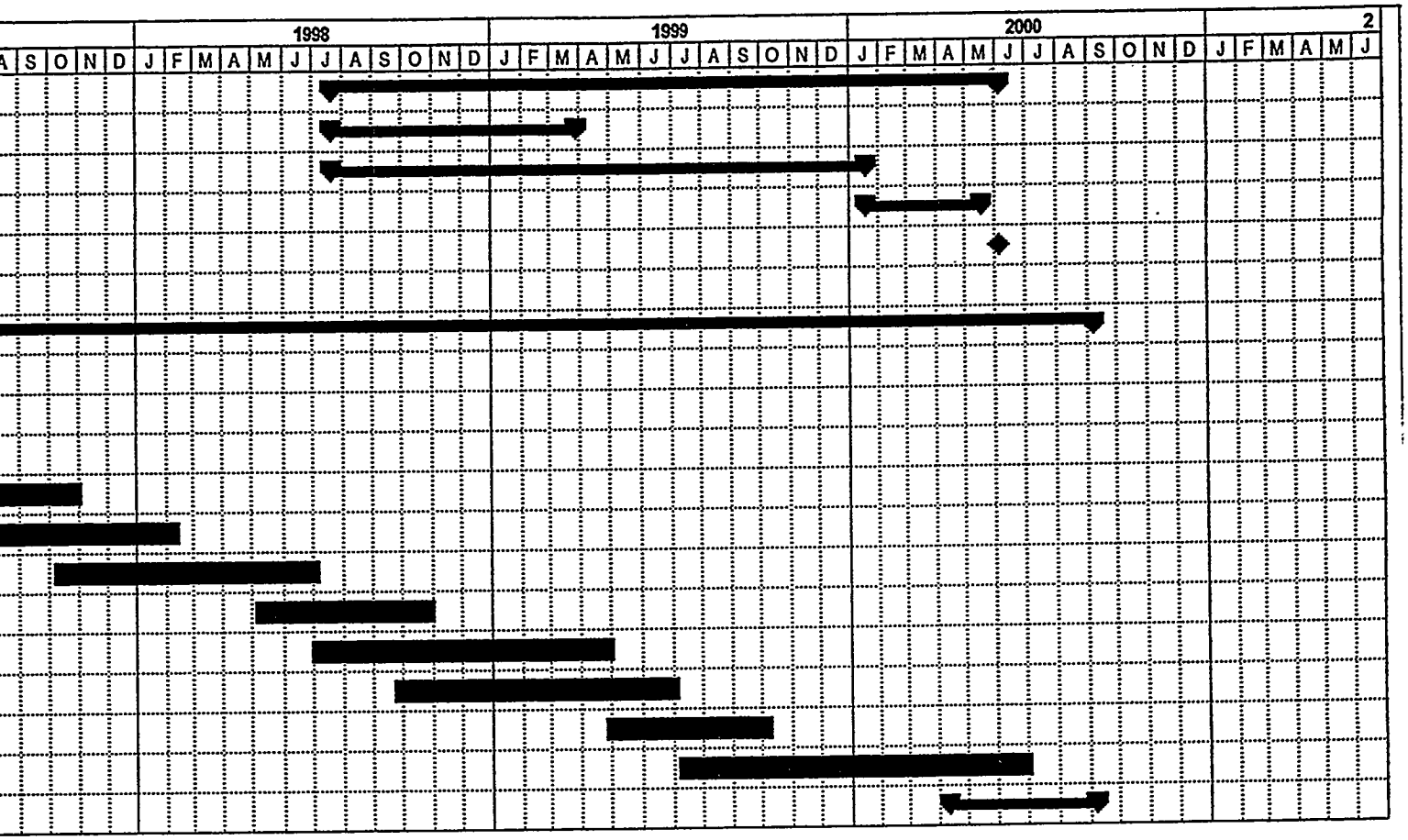


Milestone ◆ Summary Rolled Up ◇

nstruction, biomass supply development)

## 9.3 Early Demonstrations Capability

This project has the potential to be implemented early and be able to accomplish the commercial scale demonstration of several key and desirable technologies. Early implementation can be accomplished because alfalfa is a crop that can be integrated into existing cropping rotations and grown in the region in sufficient quantities to provide a reliable crop source. Further, the conversion technology equipment to be used is ready to demonstrate at commercial size without further pilot plant development cycles. The technology suppliers are willing to warrant their

equipment designs and processes. The design bases that need to be established for the detailed design of the project can be validated at existing pilot facilities. So the tangible return to those organizations providing cost share or holding equity positions until commercial scale designs have been proven workable have the incentive to come forward with those investments. Cost share is only likely for the first units to be demonstrated and this project can be first in line.

An average return on equity of 11.5% over the life of the project (on the initial equity investment) can be achieved with a COE competitive with other biomass options, and that return is consistent with the expectations for a project with this type with market exposure for the sale of by-pass protein. Thus the alfalfa co-op and utility that would be long term investors could expect to recover a return on, and a return of their investments

## 9.4 Biomass Shed Development Schedule

The biomass shed development needs to be done in sufficient time to provide stem material for the startup and operation of the power plant. In addition, it would be desirable for the market for the leaf meal to be fully established. To allow for the by-pass protein market to be penetrated by this alfalfa based feed supplement the shed is assumed to be developed early, and the development financed outside the project. Sales of processed leaf material and stem material (as a boiler fuel or in some other application) would provide the early income to support this venture, perhaps along with state development funds.

## Description of Schedule (Figure 9-4)

Processing Plant Development

- Processing capacity at 25TPH with ONE processing line for 8 hours/day from July 1, 1996 to July 1, 1998.
- Capacity stays the same but run time goes to 24 hours/day from July 1, 1998 to May 1, 1999.
- Capacity goes to 50TPH with TWO processing lines on May 1, 1999 to January 1, 2000 still at 24 hours/day.
- Final capacity goes to 100TPH with FOUR processing lines on January 1, 2000 to coincide with power plant startup.

Biomass Shed Development

- DFSS capacity starts at 20,250 TPY with 10,000 acres in service on May 1, 1996. These acres are producing at the 1st year level of 2.0 tons/acre. Three cuttings are made on July1, August 1, September 1 with equal production for each cutting.
- DFSS capacity increases to 45,000 TPY on May 1, 1997 as the original 10,000 acres enters its second year and produces at 4.5 tons/acre.
- DFSS capacity increases to 126,000 TPY on May 1, 1998 with the original 10,000 acres producing at 3rd year level of 4.5 tons/acre and an additional 40,000 acres producing at 1st year level of 2.0 tons/acre.
- DFSS capacity increases to 447,750 TPY on May 1, 1999 with both the original contract of 10,000 acres and the second contract of 40,000 acres producing at 4.5 tons/acre. A third contract of 110,000 acres begins producing at the 1st year rate.
- DFSS capacity increases to 675,000 TPY on May 1, 2000 as the original 10,000 acres falls away to begin its corn/soybean production and the 2nd and 3rd contracts with a total of 150,000 acres produce at the 4.5 tons/acre rate.

*Figure 9-4 Schedule of Production Capacity and Resulting Inventory*

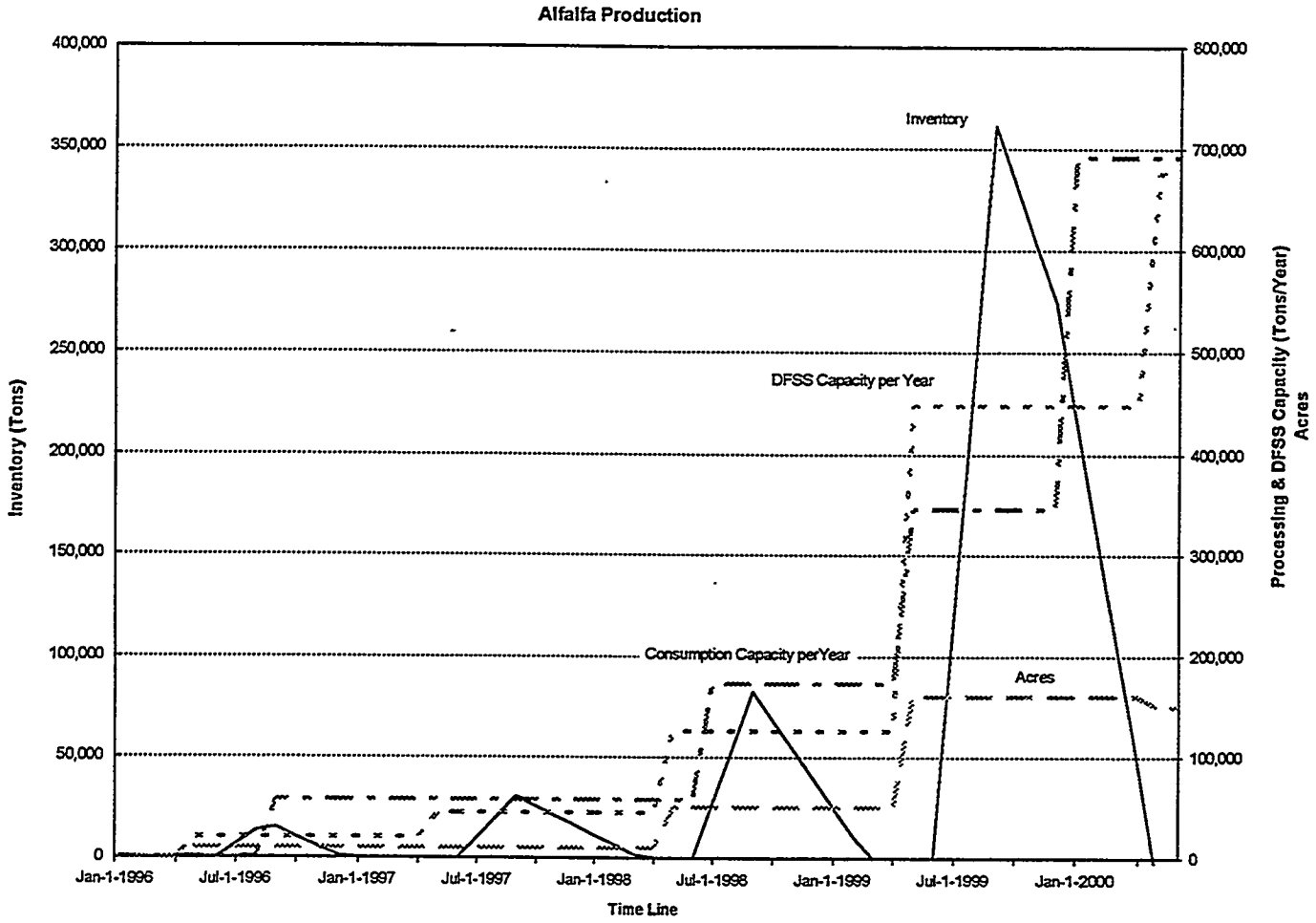

DOE/FE/12345-1
Dist Category UC-101

# Economic Development Through Biomass Systems Integration

# Sustainable Biomass Energy Production

## Volume 4

## SITE CONSIDERATIONS

Prepared by

**Max M. DeLong, Ph.D., Principal Investigator**
**NORTHERN STATES POWER COMPANY**
**Minneapolis, Minnesota 55401**

Date Published—May 1995

**Prepared For The**
**NATIONAL RENEWABLE ENERGY LABORATORY**
**Under SUBCONTRACT No. AAC-4-13326-02**
**and**
**ELECTRIC POWER RESEARCH INSTITUTE**
**Under AGREEMENT RP-3407-21**

# TABLE OF CONTENTS VOLUME 4

## SITE CONSIDERATIONS
## FOR
## GENERATION OF ELECTRICITY AND CO-PRODUCT PROCESSING
## FROM
## ALFALFA PRODUCED IN SOUTHWESTERN MINNESOTA

Page


**CHAPTER 1. FACILITY LAYOUT AND DESCRIPTION** ..... **1**
1.1 Site Layout ..... 1
1.2 Processing, Gasification And Power Island Layouts ..... 3

**CHAPTER 2. PERMITTING** ..... **5**
2.1 Permitting And Regulatory Review ..... 5
2.2 Air Quality Permitting Requirements ..... 7

**CHAPTER 3. PROCESSING** ..... **11**
3.1 Separation, Process, And Facilities ..... 11

**CHAPTER 4. MAINTENANCE AND OPERATING COSTS** ..... **18**
4.1 Processing Plant ..... 18
4.2 Power Plant ..... 19

**CHAPTER 5. REGULATORY** ..... **22**

**CHAPTER 6. SULFUR DIOXIDE EMISSIONS** ..... **23**
6.1 New Source Review Triggering ..... 23
6.2 $SO_2$ Emission Allowances ..... 23
6.3 Methods To Benefit From $SO_2$ Allowances ..... 24


## LIST of TABLES

Page


Table 2-1 Threshold Values ..... 8
Table 2-2 Significant Increase Threshold ..... 8
Table 2-3 Minnesota Permit Amendment Rules ..... 9
Table 4-1 Alfalfa Processing Plant Operations And Maintenance Costs ..... 19
Table 4-2 Power Plant Operations And Maintenance Costs ..... 21


## LIST of FIGURES

Page


Figure 1-1 Minnesota Valley Plant Site ..... 2
Figure 3-1 Process Diagram ..... 12
Figure 3-2 Processing Plant Physical Layout ..... 15
Figure 3-3 Separation Process Flow Diagram ..... 16

# CHAPTER 1. FACILITY LAYOUT AND DESCRIPTION

David R. Swanberg, Mechanical Engineer, NSP

## 1.1 Site Layout

The town of Granite Falls, Minnesota (pop. 3,200) is located in southwestern Minnesota, on the Minnesota River, 125 miles from Minneapolis/St. Paul. The NSP owned Minnesota Valley Plant is located within the city limits of Granite Falls, approximately one-half mile southeast of the central business district. The plant was built in 1924 with a single 15 Mw steam turbine and two stoker coal fired boilers. The plant was expanded to 30 Mw in 1932 with the addition of another steam turbine and a third stoker coal fired boiler. In 1950, the current configuration was reached when Unit 3, a 55 Mw General Electric steam turbine was built along with a pulverized coal Riley boiler, No. 4.

Steam turbines 1&2 along with boilers 1, 2, & 3 were retired in 1976 for economic and emission reasons. These boilers are in the process of being dismantled. Present plant capacity is 50 Mw on subbituminous western (Wyoming) coal with natural gas topping. Some petroleum coke is also burned in the plant.

The town of Granite Falls get its name from the layer of granite lying beneath the town along with a ledge across the Minnesota River. The Minnesota Valley Plant property is located in a valley on the north side of the Minnesota River and runs to the base of a bluff to the north. The plant proper is bounded by the Minnesota River on the south, a substation to the west, US Highway 212 to the north, and ash settling ponds to the east. The plant elevation is 890 ft above sea level. The site layout is shown on Figure 1-1.

A recently upgraded 2-lane federal highway (Hwy 212) runs through the property with entrances, including turn lanes, east and west of the plant site. The highway descends on a gentle grade into the valley east of the plant, leveling off just north of the plant and maintaining that grade into downtown.

The layout of the new plant on the Minnesota Valley Site accommodates the existing coal fired plant remaining in service (see Figure 1-1). The coal plant would retain the full use of fuel storage (coal pile) and the delivery system (rail/truck).

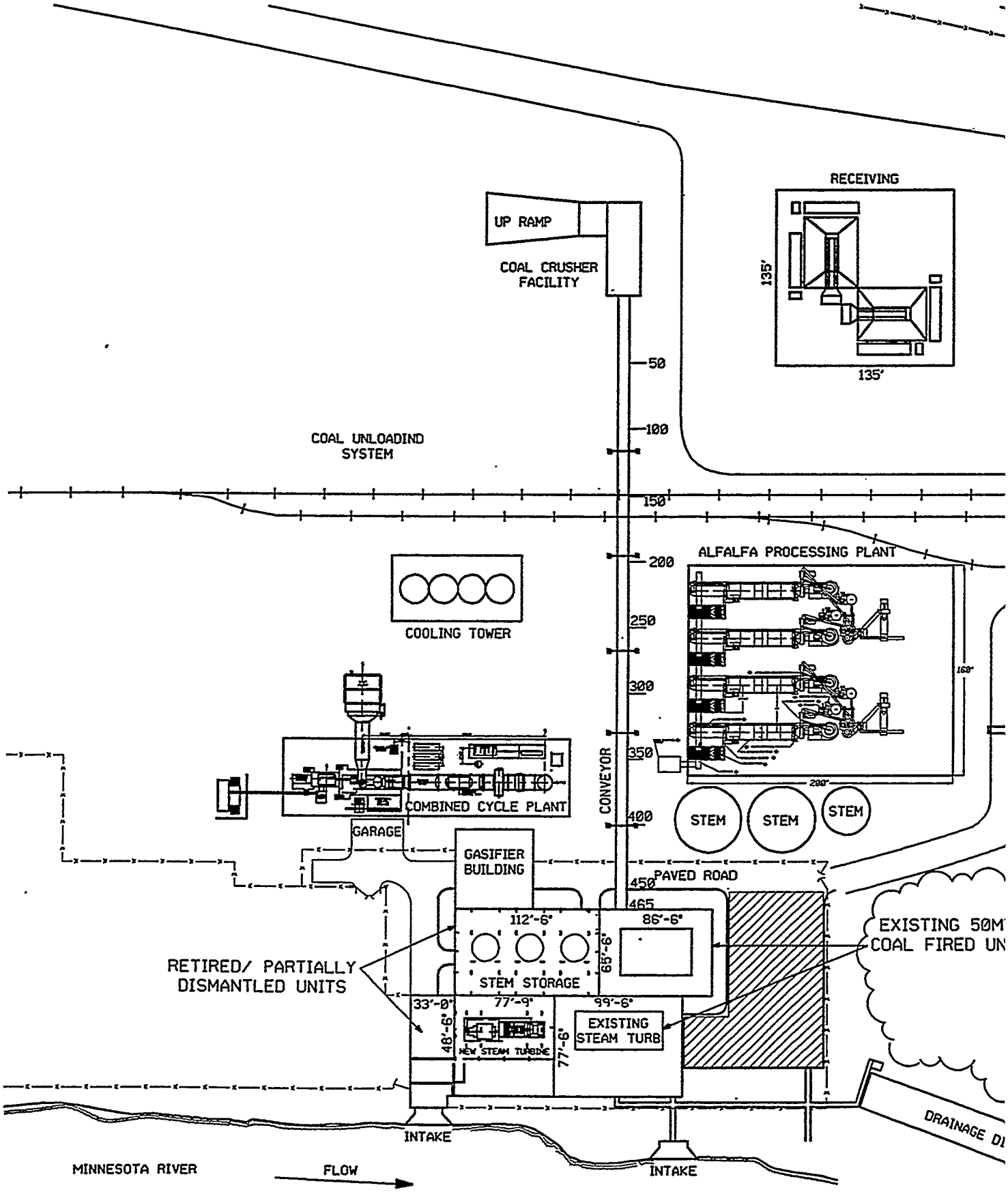


Fig. 1-1 Minneso

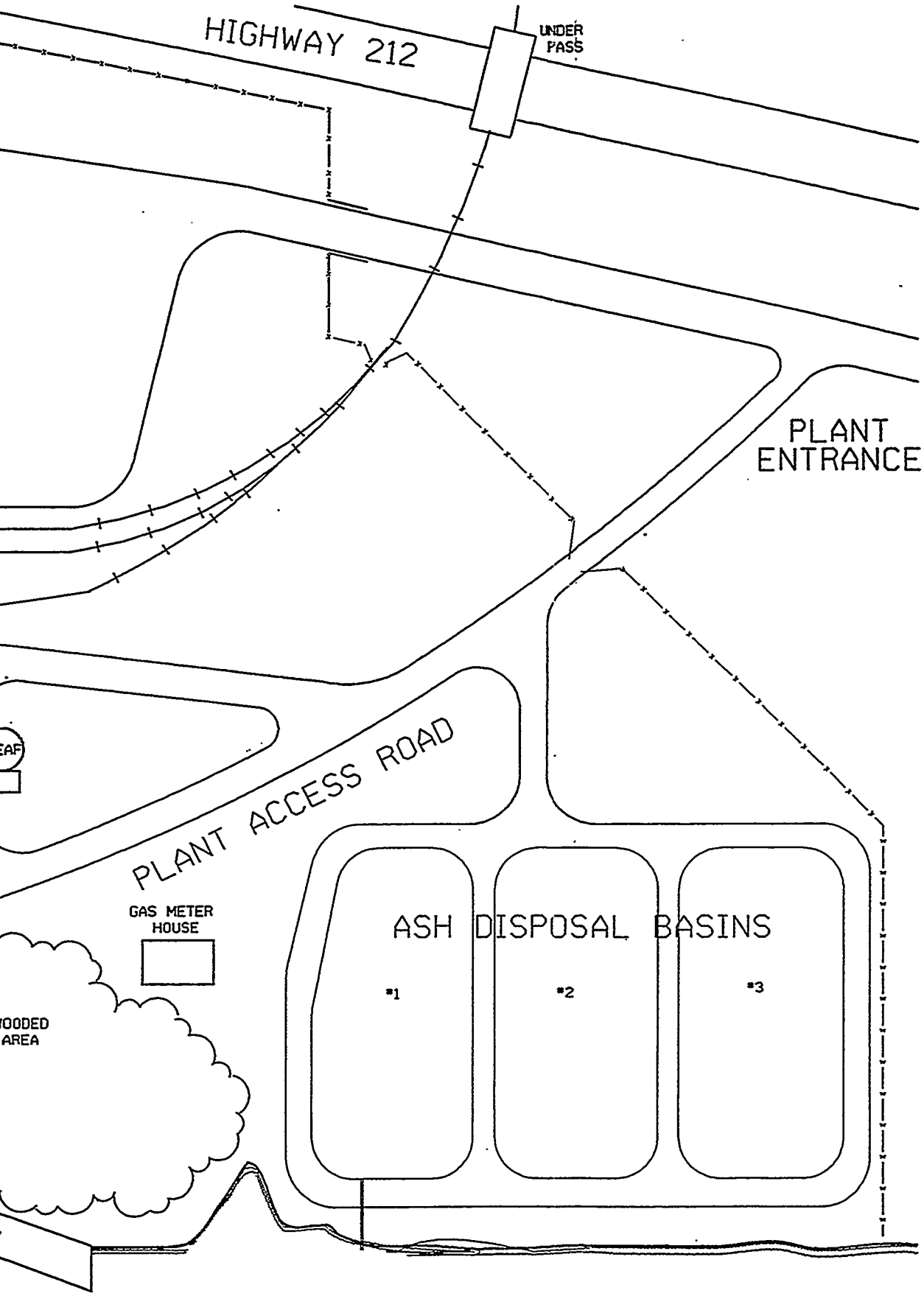


a Valley Plant Site

## 1.2 Processing, Gasification And Power Island Layouts

### Receiving

Semi-trucks will deliver to the alfalfa receiving area located in an unused portion of the coal yard east of the current coal pile. This location will allow easy access to the highway and utilize both entrances to the plant. The delivery of alfalfa to operate the plant for an entire day will be compressed to 16 hours with no deliveries over the midnight shift. A scheme being considered would leave the final daily delivery of 30 trucks loaded with the unloading handled by the receiving crew.

### Processing Plant

The processing plant will be located south of the receiving area and across the railroad tracks from it. The location will be near the existing roadway into the plant to give truck access for hauling of leaf meal. Close proximity of the processing plant to the power island will be maintained so that hot exhaust gases from the CT-CC system stack can be ducted to the dryers.

### Gasification Building

The gasification plant will contain the gasifier, the gas cooler, hot-gas-clean-up, and gasifier fuel feed equipment. It is located outside the north wall of the old boiler section of the plant. The close proximity of the gasifier to the power island will keep the length of hot gas pipe to a minimum.

### Stem Feed Bins

The stem feed bins receive alfalfa stems from the processing plant and contain the feed and metering equipment to supply the gasifier feed hoppers. The feed bins will be located in the space being vacated by the old boilers. The close proximity of the feed bins to the gasifier will provide operating advantages.

### Steam Turbine

A new steam turbine will be installed as part of the combined cycle power plant. The turbine will be placed at the current location of Units 1&2, which are retired. Some cost savings will be derived from using circulating water channels and some equipment that are already in place. There are operating advantages by having both steam turbines in the same area.

### Power Island

The power island will be north of the gasifier building with only a roadway separating it from the gasifier building. The power island consists of the combined cycle plant minus the steam turbine. A combined cycle plant uses a combustion turbine (CT) as the prime mover burning the fuel produced by the gasifier. The hot (1000°F) exhaust gases from the CT contain a considerable amount of energy which is captured by a steam boiler (heat recovery steam generator or HRSG) in the exhaust stream. The steam from the HRSG will run to the new steam turbine located on the old turbine floor. The length of high temperature steam pipe will be longer than normal for a close coupled combined cycle plant but with good insulation and steam trapping, the length

should not be a factor. It is more important to get the power island close to the gasifier and the processing plant than to the steam turbine.

## Cooling Towers

Regulations may require cooling towers to reject steam condenser heat rather than the once-through cooling using river water that the existing plant utilizes. The proposed cooling tower location is north and west of the power island. For this location, an excavation under the power island will be required to route cooling water, via concrete pipe, between the steam condenser and the cooling towers.

# CHAPTER 2. PERMITTING

Manny Castillo, Regulatory Analyst, NSP

## 2.1 Permitting And Regulatory Review

Even though the site for the new equipment is at an existing power plant, the permitting process is basically that of a new site. The interaction between the existing plant and an added facility will also need to be addressed.

The project will have to go through the following state and federal regulatory/environmental review:

Power Plant Siting Act

Under the above act all electric generating facilities over 50 Mw must go through the site permitting process for receiving a site permit. Because of the proposed size for the project (75 Mw) an exemption can be requested. Therefore, a review of alternative sites will not be required. The Environmental Quality Board may exempt the project if it is determined that there will be no resulting significant human or environmental impact.

National Pollutant Discharge Elimination System (NPDES) Permit

This permit is required for facilities that will be discharging wastewater. The NPDES permitting process is handled by the Minnesota Pollution Control Agency. Region V of the EPA will comment on the permit. The process will review current river water conditions, proposed make-up of discharge, and if it will have any impact on the river. The MPCA, can set limits for compounds in the discharge if the studies show that certain levels could have a negative effect on the river.

Air Quality Emission Permit

Emissions from the biomass conversion technology at the Minnesota Valley Plant site will be regulated by Minnesota and federal regulations. Facilities that are discharging to the atmosphere must obtain a permit. Similar to the NPDES the MPCA administers the process and the EPA may comment on the permit. For further requirements of air quality regulations, see Section 2.2.

National Environmental Quality Act (NEPA)

Since the project would be receiving federal funds, the NEPA would be applicable. The act requires that consideration be given to the environmental effects of the proposed project. An environmental information document would have to be submitted to the responsible government unit (RGU) for the completion of an Environmental Impact Statement (EIS). For this project the RGU would be the government agency that commits some funds the project.

Storm Water

Runoff from construction at site of 5 acres or greater requires that a Notice of Intent (NOI) be filed with the MPCA. A Storm Water Pollution Prevention Plan (SWPP) must be submitted with the NOI. This will qualify a project under a General Permit that has been issued by the MPCA.

Water Intake Permit

An Intake Permit will be required from the State of Minnesota.

Solid Waste Permit

Since ash is classified as a solid waste, a permit would be required for disposal. Since Minnesota Rules and Statutes are very inclusive, the resulting material from the gasification process would likely be covered by the Rules. The MPCA would be the issuing agency.

Local Permits

Yellow Medicine County and City Permits' requirements will have to be reviewed. Generally, conditional use permits and building permits will be required by local government units.

Timetable for Permitting

For planning purposes, consider a two year process to complete the regulatory review and permitting of the project.

## 2.2 Air Quality Permitting Requirements

Nancy Stafki, Senior Environmental Analyst, NSP

The following evaluation is for air quality permitting requirements for the proposed Biomass Project at the Minnesota Valley Generating Plant. The review was based on the following assumptions:

- Daily biomass consumption: 500-1000 tons
- Installation would consist of biomass unloading, stockpile, and transfer operations, a gasification system and combustion turbine combined cycle electric power generation system.
- Installation would occur in 2 stages: 1) Install the material handling system and co-fire biomass with coal in the existing boiler; 2) Install the gasification system and the combustion turbine combined cycle electric power generation system, completing the project.
- During stage 1, no physical modification would be made to the existing burners on the boiler.

Based on these assumptions, the following air quality rules and regulations apply to this project:

New Source Performance Standards (NSPS)

No NSPS exists for either the material handling system or the gasification system. NSPS does not apply during Stage 1. NSPS will apply to the new CTs. The standard is found in 40 CFR Part 60, Subpart GG, *Standards of Performance for Stationary Gas Turbines*. It includes $NO_X$ and $SO_2$ emission limits, monitoring requirements and testing requirements.

The NOx limit is for electric utility stationary gas turbines with a heat input at peak load greater than 100 Mbtu/hour based on the lower heating value of the fuel. It is based on the formula:

% Allowable NOx = 0.0150 x 14.4 / Mfg rated Heat Rate + Allowance for fuel N

The $SO_2$ limit is 0.015 % $SO_2$ by volume at 15% oxygen on a dry basis, and a fuel limit of 0.8 % sulfur by weight.

New Source Review (NSR)

NSR is discussed in 40 CFR Part 52.21. NSR applies to any modification in which new emissions are greater than or equal to the following threshold values:

*Table 2-1 Threshold Values*

| Pollutant | Threshold (Tons/Year) |
|---|---|
| Nitrogen oxides ($NO_x$) | 40 |
| Sulfur dioxide ($SO_2$) | 40 |
| Volatile organic compounds (VOCs) | 40 |
| Total particulate (PM) | 25 |
| Particulate matter less than 10 microns (PM-10) | 15 |
| Carbon monoxide (CO) | 100 |
| Lead (Pb) | 0.6 |

If NSR is triggered for an emission source (e.g., boiler, fuel handling systems, CTs, etc.), a best available control technology (BACT) review is performed for that source in addition to air quality dispersion modeling. NSR permitting takes approximately 1-2 years to complete with no construction allowed until the permit is issued. NSR does not apply during Stage 1. For Stage 2, NSR may apply to the new CTs (basically the entire project), depending on the potential increase in emissions resulting from the project.

Prevention of Significant Deterioration (PSD)

PSD pertains to all of the operations. PSD affects each pollutant with the potential to emit in quantities at least as great as the following, which then is called a "significant increase."

*Table 2-2 Significant Increase Threshold*

| Pollutant | Significant Increase Threshold (Tons/Year) |
|---|---|
| NOx | 40 |
| $SO_2$ | 40 |
| Volatile organic compounds | 40 |
| Total Particulate | 25 |
| PM-10 | 15 |
| Carbon monoxide | 100 |
| Lead | 0.6 |
| Asbestos | 0.007 |
| Beryllium | 0.0004 |
| Mercury | 0.1 |
| Vinyl chloride | 1 |
| Fluorides | 3 |
| Sulfuric acid mist | 7 |
| Hydrogen sulfide ($H_2S$) | 10 |
| Total reduced sulfur (including $H_2S$) | 10 |
| Reduced sulfur compounds (including $H_2S$) | 10 |

PSD is applicable for each pollutant for which the modification of the Minnesota Valley site would result in a significant emissions increase. The requirements of PSD include a pollutant-specific determination of the Best Available Control Technology (BACT) emission rate for each emission unit at which any increase in the pollutant (for which there is a significant increase at the site) would occur; possible ambient air quality monitoring for 4–12+ months; and ambient air quality computer modeling. These requirements must be satisfied before submitting an air emission permit application. The permitting process, once the application is submitted, takes up to 18 months.

Minnesota Rules (MR)

A permit amendment will be required before any stage can begin. The type of permit that is required is largely dependent on the emissions increase due to the project. Most of the criteria for each permit type are listed below:

*Table 2-3 Minnesota Permit Amendment Rules*

| Type of Permit Amendment | Pollutant | Emission Threshold | Notes |
|---|---|---|---|
| Insignificant Modification | NOx, $SO_2$, VOC<br>PM10<br>CO<br>Pb | < 2.28 lb/hr<br>< 0.855 lb/hr<br>< 5.70 lb/hr<br>< 0.025 lb/hr | If the emissions increase is less than the permit threshold, then no permit amendment is required. |
| Minor Amendment | NOx, $SO_2$, VOC<br>PM10<br>CO<br>Pb | < 9.13 lb/hr<br>< 3.42 lb/hr<br>< 0.11 lb/hr<br>< 0.11 lb/hr | Can commence construction and begin operation 7 days after MPCA receives the permit application. |
| Moderate Amendment | NOx, $SO_2$, VOC<br>PM<br>PM10<br>CO<br>Pb | < 40 ton/yr<br>< 25 ton/yr<br>< 15 ton/yr<br>< 100 ton/yr<br>< 0.6 ton/yr | Can commence construction before permit is issued upon receipt of a letter of approval to construct from the MPCA, but cannot operate until permit is issued. |
| Major Amendment | NOx, $SO_2$, VOC<br>PM<br>PM10<br>CO<br>Pb | ≥ 40 ton/yr<br>≥ 25 ton/yr<br>≥ 15 ton/yr<br>≥ 100 ton/yr<br>≥ 0.6 ton/yr | Cannot begin construction until receive permit. |

The MR that apply to this project and how they impact the project are provided below.

1. Standard of Performance for Indirect Fossil Fuel Burning Equipment (7005.0300-.0400) -- No change from current operations.

2. Control of Fugitive Particulate Matter (7005.0550-.0650) -- No change from current operations.
3. Emission Standard for Visible Air Emissions (7005.1100-.1130) -- No change from current operations.
4. Monitoring, testing and reporting requirements (7005.1850-.1880) -- No change from current operations.
5. New Source Performance Standard for Bulk Agricultural Commodity Facilities (MR 7011.1000-1015) will regulate the unloading and handling of alfalfa:
   - Clean up spilled alfalfa from the facility property as required to minimize fugitive emissions.
   - Control fugitive particulate emissions from the truck unloading station or handling operation to a level no greater than 5% opacity.
   - If control equipment is used for the unloading or handling operations, the control equipment discharge opacity limit is 10%, with a particulate limit ranging from 0.020 to 0.100 grains/dscf, depending upon what the gas volume is.
6. The operation cannot create a public nuisance.
7. Odor Control - MR 7011.0305 regulates based on odor control units.

# CHAPTER 3. PROCESSING

David Swanberg, Mechanical Engineer, NSP

## 3.1 Separation, Process, And Facilities

The alfalfa processing plant will borrow heavily on technology that has been developed over the last 40 years for the alfalfa dehydration industry. Many of these plants once dotted the countryside of the Upper Midwest. Very few still remain as the economics of the industry changed.

A major difference between the "dehy" industry and the alfalfa energy plant is the moisture content of the incoming alfalfa. Originally, the dehy plants took fresh chop alfalfa from the field, dried and pelletized it. The energy requirement for drying this wet feedstock was considerable. In contrast, the alfalfa energy plant will use a sun and air dried feedstock that is low in moisture before it arrives at the plant. The energy requirement for drying will be low.

A second difference is that the dehy industry traditionally pelletized the entire alfalfa plant. This allowed the alfalfa pellets to be shipped greater distances with lower transportation cost because of the increased density. An alfalfa energy plant will separate the alfalfa leaf and stem and pelletize only the leaf. The leaf can then be shipped economically to take advantage of livestock protein markets far from the growing area.

### 3.1.1 Description Of Process

The process selected is based on a design by Ronning Engineering Company, Inc., of Overland Park, Kansas. Ronning Engineering designs alfalfa processing plants and similar feed processing for clients in the United States, Canada, and other countries.

The alfalfa arrives at the plant via truck in round bale form. The bales are put through a bale splitting operation to break up the bale and reduce the product size for processing.. Material loss and dust emissions are prevented by pulling air into the splitting operation and using the air to convey the alfalfa to the dryer. (See Figure. 3-1 and Figure. 3-3 Process Flow Diagrams.)

*Figure 3-1 Process Diagram*

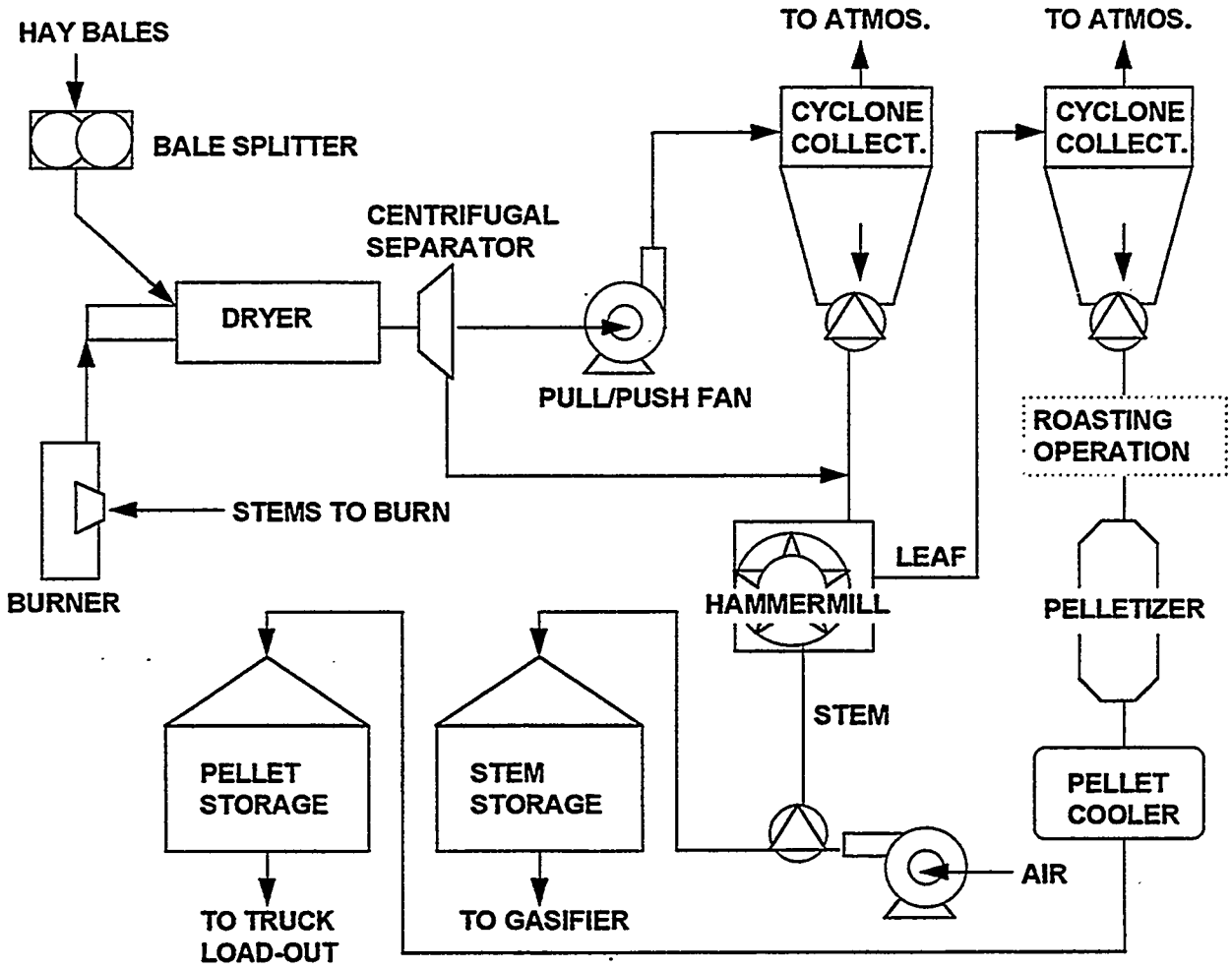


Drying serves two purposes: bulk moisture removal and flow smoothing. The gasifier requires a feedstock moisture level of 10-20% to maintain efficient gas production for the power plant. This gasifier operates best when feedstock moisture content varies slowly. This prevents the gasifier from receiving a "slug" of wet material. The dryer serves as a flow smoother since slugs of wet hay are intermingled with dryer hay so the average meets gasifier specifications.

Further separation of leaf and stem is accomplished after the alfalfa has been dried. As growers have known for years, excessive drying in the field increases leaf loss during raking and baling. The leaf loss is directly related to moisture content. In the alfalfa processing plant, this feature is used to advantage by running the alfalfa through a rotary kiln type dryer. The tumbling action of

the rotary dryer not only reduces the moisture but continues the separation process by shaking leaves loose from the stems. On average, hay bales will arrive at the power plant with 15% moisture content. Since leaves have more surface area per pound than stems, they will dry more rapidly and to a lower value than stems. The leaf moisture will be reduced to about 2% while the stem material will be reduced to 10%.

The heart of the separation system is the fractionating hammermill. It has been specifically designed for the separation of alfalfa. An air stream carries the alfalfa to the hammermill where it enters at one end of the casing. The stem fiber and the leaf are reduced in size by impact with hammers. A stationary screen surrounding 270° of the rotor serves as a path through which the finer leaf particles may pass. Approximately half of the airflow is withdrawn through the screen and the leaf material with it. The stems tend to be too large and too tough to pass through the screen. The stem material that lays against the screen is subjected to a scrubbing action to remove the high protein outer layer. The remaining airflow causes the stems to migrate axially toward the outlet end of the hammermill casing and exit. The fractionating hammermill allows some control over the degree of separation by varying the leaf/stem airflow ratios. By pulling less air off the screen section, a lower fraction of leaf will be collected but at a higher purity level. Leaf material that was missed in the hammermill can be recaptured downstream because the process incorporates a rotary screen to further refine the separation operation.

The leaf material is transported pneumatically to a negative pressure collector where the leaf and air are separated. The leaf material then goes to a meal bin that meters the flow to the roasting operation. The roasting operation increases the bypass protein content for livestock. The optimal roasting cycle has not yet been defined and remains a subject for further investigation. It could be either a batch or continuous flow process. The output of the roasting operation will go to a pelletizing machine of standard design.

A pellet cooler is required after the pelletizing machine because of the heat generated in the pellet machine. From the pellet cooler, the pellets will be conveyed by flight conveyor to a storage bin that has load-out capabilities for trucks.

### 3.1.2 The Facility

The alfalfa processing plant will have a footprint of 160'x200' (see Figure 3-2).. Outside the processing building, the stem storage tanks and load-out facilities for pellets will be located. Consideration of efficient truck traffic flow patterns will be made for leaf meal load-out operations. Rail line is available on the site and could be utilized for large shipments of leaf meal to distant locations. The receiving area for the delivery of alfalfa is separate from the main

processing plant and considerably smaller in plan.. It will contain a separate building located across the railroad tracks from the processing plant. It will need to accommodate a continual flow of truck traffic delivering alfalfa from satellite storage sites. Two separate receiving lines will be required with each line capable of unloading two trucks at a time. The bales will be split and chopped in the receiving area and conveyed above the railroad tracks to the processing plant.

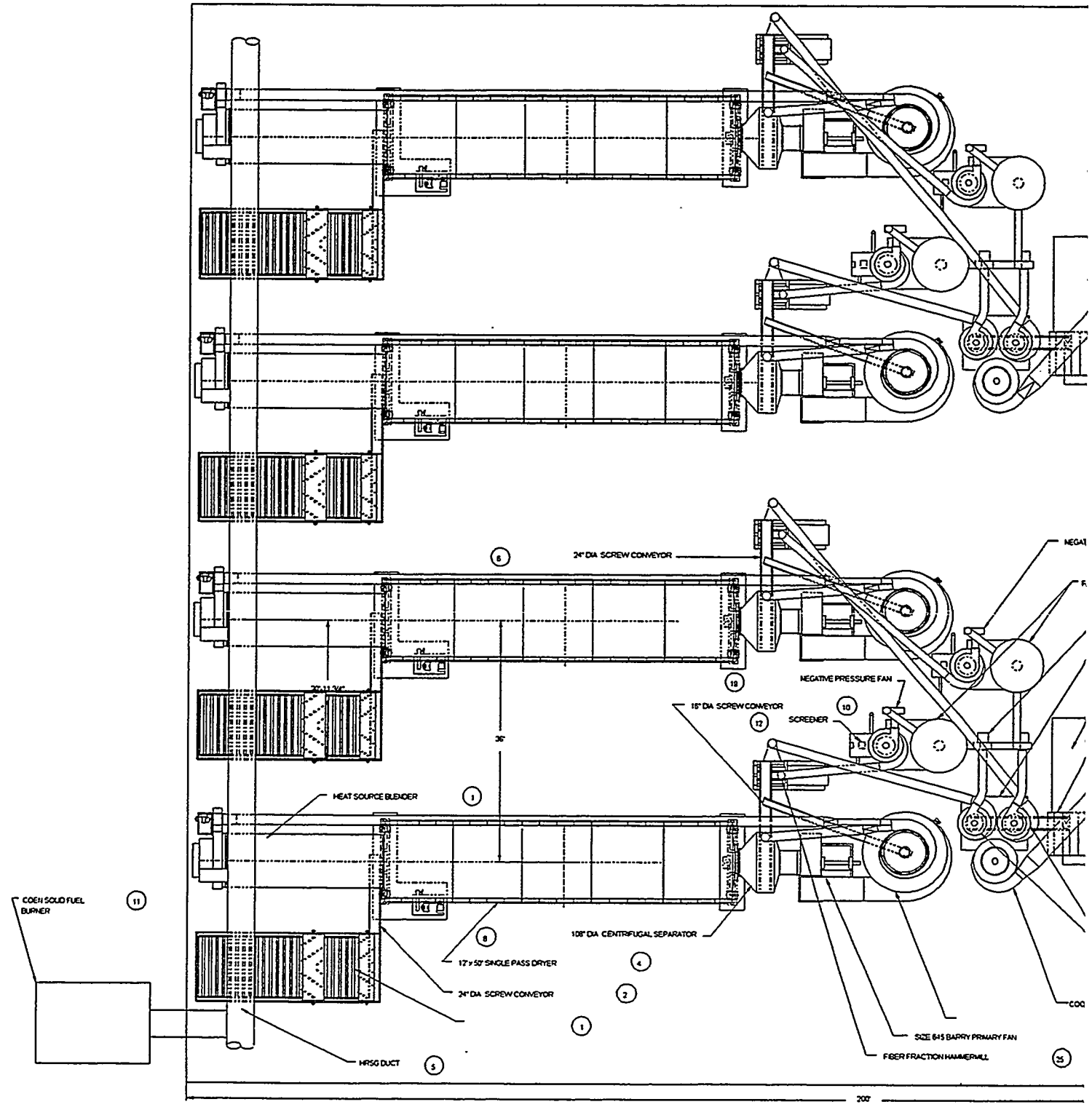


*Figure 3-2 Processing F*

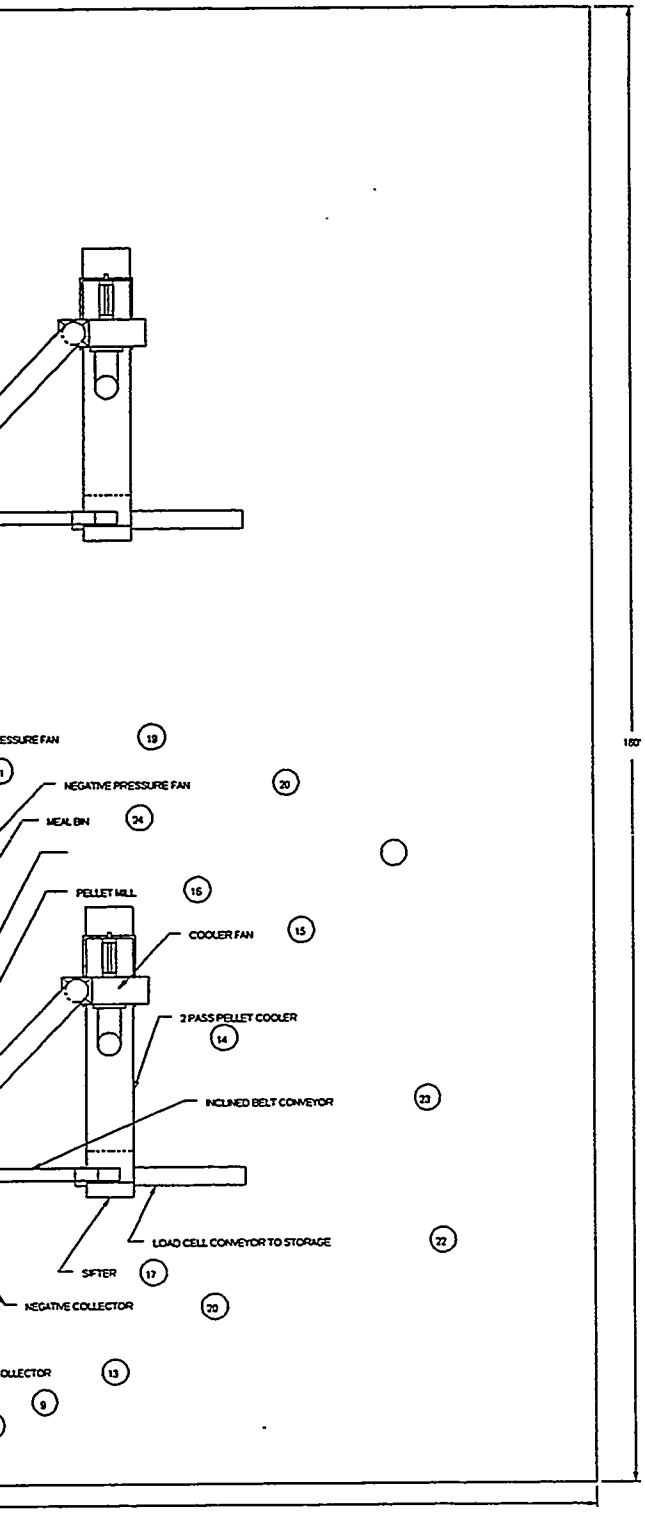


*nt Physical Layout*

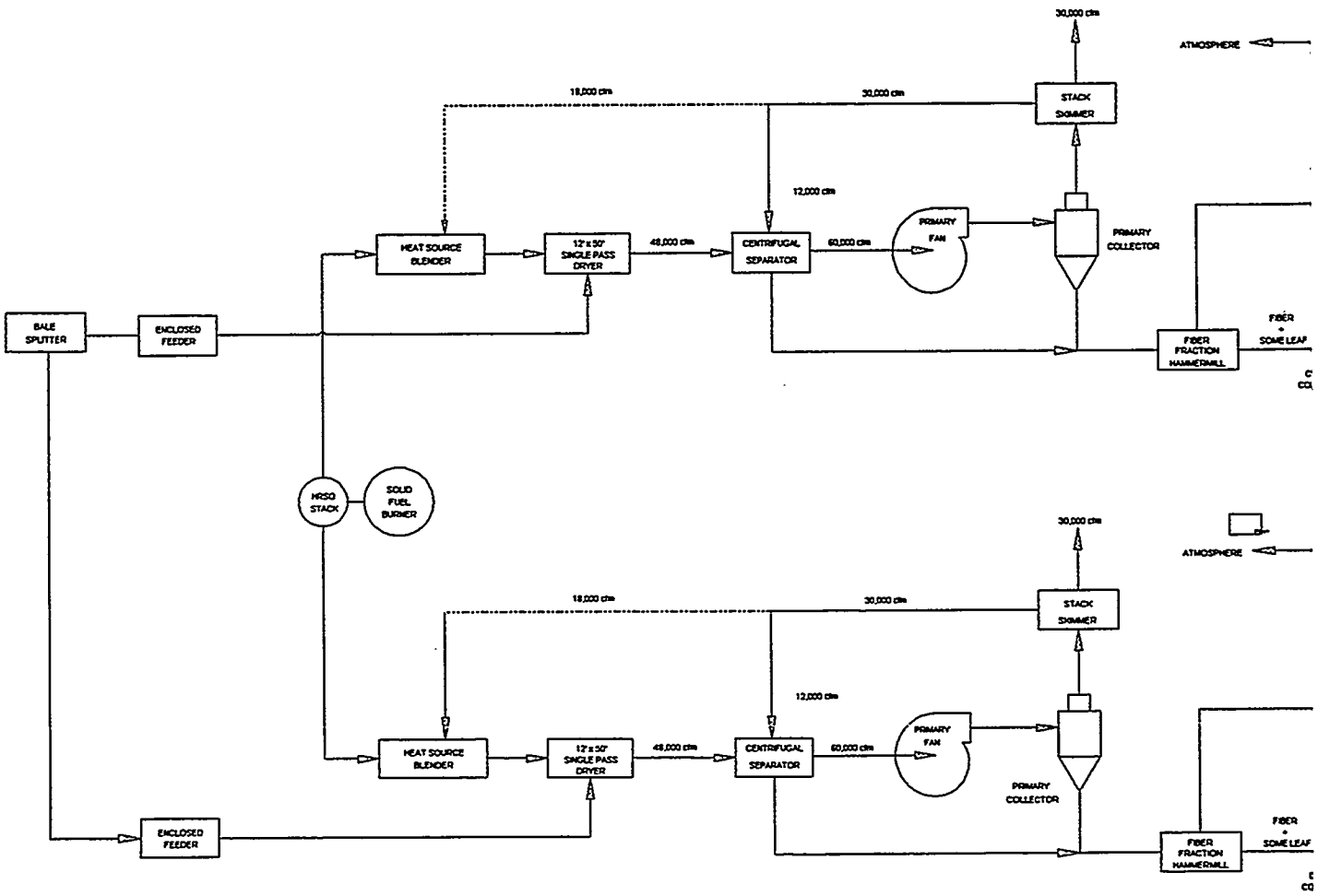


*Figure 3-3 Separation Pr*

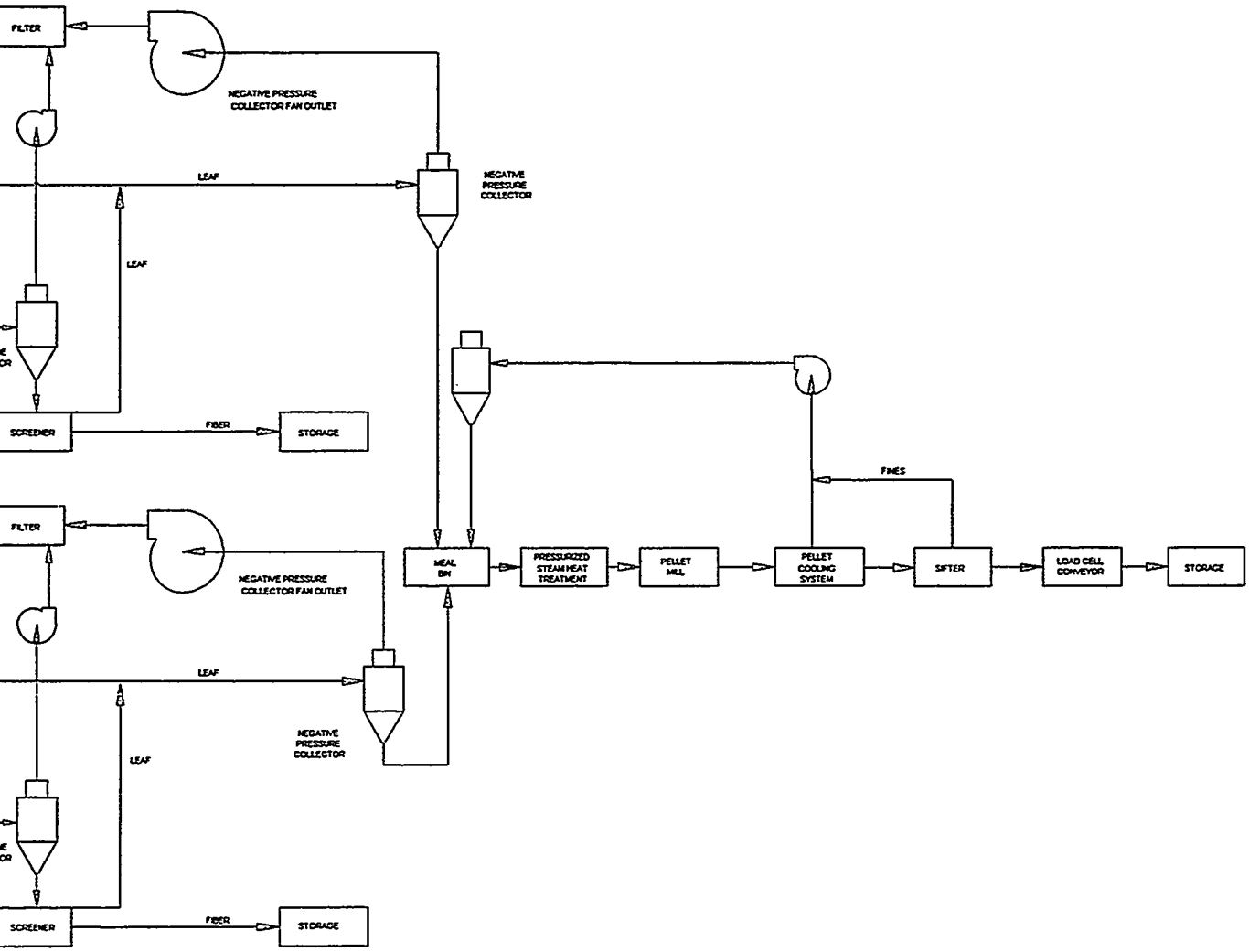


*ess Flow Diagram*

### 3.1.3 On-Site Storage Of Alfalfa

Three types of storage have been integrated into the design of the plant. Buffer storage overcomes temporary disruptions of stem flow from the processing plant. It is provided by stem feed bins in the power plant that can provide an hour of stem flow to the gasifier.

Short term storage is required to provide alfalfa over the daily 8 hour period when truck deliveries are not being made. The method under current consideration is to build a pile of round bales outside the receiving building from truck deliveries throughout the day, possibly taking every 4th truck. Trucks would be unloaded by a rubber tired forklift identical to those used at the satellite storage facilities. The forklift would do the unloading, stacking, and reclaim. During reclaim, the forklift would drop the bales directly onto the receiving conveyor.

Long term storage covers the periods of delivery disruption up to 4 days. The cause could be anything from a major equipment failure in the processing plant to a winter snow storm. On a routine weekly basis, this storage will be called on to cover the period from Saturday midnight to Monday morning. The storage provided will be for processed stems only. The leaf fraction will have already been processed and in separate storage. Two 50' diameter x 100' high silos will be required. The bottom feed mechanism on each will supply the pneumatic conveying system that delivers the stems to the power plant.

# CHAPTER 4. MAINTENANCE AND OPERATING COSTS

David Swanberg, Mechanical Engineer, NSP

## 4.1 Processing Plant

The operation and maintenance costs of the alfalfa processing plant represent all costs required to operate the facility. They do not cover the capital cost portion which is covered in Volume 3 - Business Plan.

### 4.1.1 Fixed Costs

It is estimated that 20 persons will be required to operate the facility. An average annual cost per person of $55,000, including overhead costs, was used. An annual charge of $200,000 for marketing of alfalfa leaf pellets covers labor and expenses. An annual maintenance cost of $200,000 was used to cover building and grounds maintenance, snow removal, etc.

### 4.1.2 Variable Costs

Cost that are directly related to throughput of the plant are classified as variable cost. The fuel used for drying the alfalfa is a variable cost. The drying fuel is alfalfa stems extracted from the main stem stream. If no other source of drying heat is available, the dryers could consume as much as 6% of the total stem material. The value of the dryer fuel is the same as the fuel value of stems to the power plant. As such, it will vary depending on the marketing success of the leaf material but is nominally valued at $30/ton or $2.06/megabtu. A real possibility is that sources of biomass fuel can be found that are waste from other agricultural processes. They could be obtained at significantly lower prices. A value of $15/ton has been assigned to these prospective waste sources and used in the fuel cost table. The cost of natural gas, a backup possibility, is in the $2.60/megabtu range.

Heat required for the leaf roasting process is also a variable cost. The quantity of heat for this activity has been nominally set at 10 megabtu per hour. The source of the heat would be extraction steam from the power plant at the required temperature, pressure, and flowrate. To calculate the cost, the required heat should be valued the same as if from natural gas at $2.60/megabtu. The roasting heat, for the purposes of this report, was taken as $0 because the cost of it was already included in the overall steam plant cycle and in the plant heat rate. In a future refinement of the steam cycle, it will be possible to separate out the cost.

The electrical power to operate the processing plant is a variable cost. The big electrical energy consumers are the hammermill and the pellet machine. Historically, the dehydration industry used

an electrical power consumption rate of 100Hp/ton/hour. Because of the lower incoming moisture, removal of stems from the pelletizer, and efficiencies of scale, the processing plant should be closer to 50Hp/ton/hour. The electrical energy is valued at 3c/Kwh.

Maintenance captures the wear/tear and overhaul costs of the equipment. It is considered a variable cost because it varies with how much the plant runs. It is not strictly throughput related but varies more based on the hours run. Overhaul schedules are normally determined by run hours and not throughput. An industry annual allowance of 2.5% of the installed plant cost is used.

Table 4-1 (below) summarizes the operating and maintenance costs on both a per ton and yearly basis (683,600 tons/year).

*Table 4-1 Alfalfa Processing Plant Operations And Maintenance Costs.*

| | $/Ton | $/Year |
|---|---|---|
| Fixed Labor | 1.90 | 1,300,000 |
| Fixed Maintenance | 0.30 | 200,000 |
| Dryer Fuel | 0.48 | 372,000 |
| Electrical Power | 1.13 | 876,000 |
| Equipment Maint. | 0.49 | 312,000 |
| Total | 4.30 | 3,060,000 |

## 4.2 Power Plant

The operation and maintenance costs of the power plant represent all costs required to operate the facility.

### 4.2.1 Fixed Costs

Labor is the largest fixed cost. It is estimated that 30 persons will be required to operate the facility. An average annual cost per person of $55,000, including overhead costs, was used. Tampella and Westinghouse estimate that $120,000 annually will be spent on supplies and materials. The annual cost for rentals and leases was estimated by Tampella to be $20,000. Tampella and Westinghouse have estimated the annual expense for contracted services is $25,000.

Permitting costs including emissions fees was estimated by Tampella and Westinghouse to be $20,000 annually. Routine maintenance to the facility is estimated by Tampella and Westinghouse to be $130,000 annually.

### 4.2.2 Variable Costs

Cost that are directly related to throughput of the plant are classified as variable cost. Gasification annual costs that are variable include the following consumables: $201,000 for bed material, $11,000 for liquid nitrogen, $619,000 for inert gases, $145,000 for ash handling. Power island consumables include $283,000 for demineralized water and $198,000 cooling tower and boiler blowdown chemicals.

Maintenance variable captures the wear/tear and overhaul costs of the equipment. The annual estimate for gasifier inspection and repair is $737,000 and was provided by Tampella. In the power island, the combustion turbine requires an annual allowance of $510,000, the steam turbine requires $51,000, the heat recovery steam generator (boiler) requres $62,000, and the balance of plant requires $170,000. The hot gas cleanup filter has an annual inspection and repair cost of $187,000. The power island and hot gas cleanup estimates were provided by Westinghouse. It should be noted that the estimated amount will not be spent every year because overhauls are not performed every year. The amount quoted should be considered an annualized amount over the life of the plant.

Table 4-2 summarizes the operating and maintenance costs for the power plant and gasifier on both a megawatt hour basis (558,450 Mwh) and annually.

Table 4-2 Power plant operations and maintenance costs.

| | $/Mwh | $/Year |
|---|---|---|
| Fixed Labor | 2.95 | 1,650,000 |
| Fixed - Other | 0.56 | 315,000 |
| Gasifier Variable - Consumable | 1.75 | 976,000 |
| Power Island Variable - Consumable | 0.86 | 481,000 |
| Gasifier Variable - Maintenance | 0.49 | 737,000 |
| Power Island Variable - Maintenance | 1.42 | 793,000 |
| Hot Gas Cleanup | 0.33 | 187,000 |
| Total | 8.36 | 5,139,000 |

# CHAPTER 5. REGULATORY

The proposed project will allow NSP to meet a mandate imposed by the Minnesota State legislature in 1994. In order for the NSP to be allowed to store spent nuclear fuel in dry casks at the Prairie Island Nuclear Plant, NSP is required to have 50 Mw of generating capacity from closed cycle biomass by Jan. 1, 1999. An additional 75 Mw of closed cycle biomass capacity is required by Jan. 1, 2003.

The biomass generating capacity does not have to be owned by NSP. As a result, Minnesota Electric, a division of NSP, will be soliciting proposals from power producers in early 1995 for the first 50 Mw of the mandate. NSP Generation, a division of NSP, may submit a proposal on a par with any other qualified power producer. Other, lower cost proposals may be received using a technology different from Alfagas. Minnesota Electric will be obligated to select that proposal.

# CHAPTER 6. SULFUR DIOXIDE EMISSIONS

A power plant burning gasified alfalfa stems will emit an amount of sulfur dioxide proportionate to the sulfur content of the feedstock. The emission level as stated in Volume 2 (p. 5-9) is 127lb/hr of $SO_2$. With a gasifier heat input of 669 Mbtu/hr as stated in Volume 2 (Table 5-4), dividing 127 lb/hr by 669 Mbtu/hr gives 0.19 lb/Mbtu.

## 6.1 New Source Review Triggering

New Source Review is triggered if emissions are greater than 40 tons/year. The alfalfa plant will emit (127 lb/hr x 8760 hrs/yr x 85% capacity factor) / 2000 lb/ton = 473 ton/yr so New Source Review is triggered. Triggering requires a Best Available Control Technology (BACT) review in addition to dispersion modeling. BACT would involve using some $SO_2$ "getters" in the system, probably injected into the bed of the gasifier. This could be a limestone product that would react chemically with the sulfur in the alfalfa to remove it from the gas stream.

## 6.2 $SO_2$ Emission Allowances

Congress passed the Clean Air Act in 1990 to reduce emissions from power plants. The result, when fully implemented in 2000, will be 10 million fewer tons/year of sulfur dioxide emitted to the atmosphere. As an incentive to reducing emissions in a cost effective manner and also to reward those who have already reduced $SO_2$ emissions, it established a marketing mechanism for $SO_2$ allowances.

Title IV of the 1990 Clean Air Act allows the trading of $SO_2$ allowances. One allowance authorizes a utility to emit one ton of $SO_2$. If allowances are trading at $150/ton, a recent price, an amount equal to $71,000 ($150/ton x 473 tons/yr) would need to be purchased annually to bring the $SO_2$ effect of operating the plant to zero.

Utilities can earn tradable emissions allowances from the EPA's Conservation and Renewable Energy Reserve which has 300,000 allowances to award. The allowances are earned by either adopting efficiency measures or implementing renewable energy projects. It is not clear how a biomass project such as alfalfa would qualify for these allowances if it had an $SO_2$ emission rate higher than a new coal fired plant as it currently does. The EPA began accepting applications for these allowances on July 1, 1993 and awards the allowances on a first-come, first-served basis. The application form is a simple two-sided form. Application for an efficiency credit takes more time for approval than renewable energy because DOE must first certify that the utilities ratemaking process does not make energy conservation unprofitable.

## 6.3 Methods To Benefit From $SO_2$ Allowances

$SO_2$ allowances can be gained in three ways by implementing a renewable energy program such as wind, solar, hydro, or biomass. The first method, Avoided Emissions, means that the energy produced from a renewable source replaces energy that would have been produced from a conventional source. It is assumed that the amount of tons of $SO_2$ produced by renewable energy is less than the amount from the conventional source, therefore unused allowances are produced that can be sold or banked to be used later to comply with Phase II of the Acid Rain Program (part of the 1990 Clean Air Act). The value, if sold, is the market value of the allowances. Currently, the market value is in the $150/ ton range. The number of allowances produced depends on what units were displaced and their emission rates. Best case is if all the allowances were sold from one years production of $SO_2$ from the biomass plant and would be:

669 Mbtu/hr x 8760 hours/year x .85 Capacity Factor x .19 lb $SO_2$/Mbtu / 2000 lb/ton = 473 tons/ year.

If multiplied by $150/ton, the annual savings are $71,000.

A second possibility to get allowances is from the Conservation and Renewable Energy Reserve, which is a pool of 300,000 allowances that have been set aside nationally. Application for allowances from this reserve must be made by the utility. Allowances are awarded at the rate of one allowance per 500 Mwh of energy production annually. For the alfalfa biomass plant, this would be 75 Mw x 8760hour/year x .85 Capacity Factor = 558,450 Mwh/year energy produced / 500Mwh = 1117 allowances. The value of the allowances at current rates is 1117 allowances x $150/ allowance = $167,500/year.

A third way to minimize allowance consumption is to reduce the generation from a unit, thereby saving emission allowances that had been attributed to that unit. The value of using this method is very similar to Avoided Emissions.

# REPORT DOCUMENTATION PAGE

*Form Approved*
*OMB NO. 0704-0188*

Public reporting burden for this collection of information is estimated to average 1 hour per response, including the time for reviewing instructions, searching existing data sources, gathering and maintaining the data needed, and completing and reviewing the collection of information. Send comments regarding this burden estimate or any other aspect of this collection of information, including suggestions for reducing this burden, to Washington Headquarters Services, Directorate for Information Operations and Reports, 1215 Jefferson Davis Highway, Suite 1204, Arlington, VA 22202-4302, and to the Office of Management and Budget, Paperwork Reduction Project (0704-0188), Washington, DC 20503.

| 1. AGENCY USE ONLY (Leave blank) | 2. REPORT DATE | 3. REPORT TYPE AND DATES COVERED |
|---|---|---|
| | December 1995 | Final Subcontract Report |

**4. TITLE AND SUBTITLE**
Economic Development Through Biomass System Integration: Vol. 2-4

**5. FUNDING NUMBERS**
(C) AAC-4-13326-02
(TA) BP51.1010

**6. AUTHOR(S)**
Max M. DeLong, Ph.D., Principal Investigator

**7. PERFORMING ORGANIZATION NAME(S) AND ADDRESS(ES)**
Northern States Power Company
Minneapolis, Minnesota 55401

**8. PERFORMING ORGANIZATION REPORT NUMBER**
DE96000498

**9. SPONSORING/MONITORING AGENCY NAME(S) AND ADDRESS(ES)**
National Renewable Energy Laboratory
1617 Cole Blvd.
Golden, CO 80401

**10. SPONSORING/MONITORING AGENCY REPORT NUMBER**
NREL/TP-430-20517

**11. SUPPLEMENTARY NOTES**
NREL technical monitor: Kevin Craig, (303) 275-2931

**12a. DISTRIBUTION/AVAILABILITY STATEMENT**
National Technical Information Service
U.S. Department of Commerce
5285 Port Royal Road
Springfield, VA 22161

**12b. DISTRIBUTION CODE**
UC-1503

**13. ABSTRACT** *(Maximum 200 words)*
Report documents a feasibility study for an integrated biomass power system, where an energy crop (alfalfa) is the feedstock for a processing plant and a power plant (integrated gasification combined cycle) in a way that benefits the facility owners.

**14. SUBJECT TERMS**
energy conservation, biomass energy production, gasification, biomass power

**15. NUMBER OF PAGES**
375

**16. PRICE CODE**

| 17. SECURITY CLASSIFICATION OF REPORT | 18. SECURITY CLASSIFICATION OF THIS PAGE | 19. SECURITY CLASSIFICATION OF ABSTRACT | 20. LIMITATION OF ABSTRACT |
|---|---|---|---|
| | | | |

NSN 7540-01-280-5500

Standard Form 298 (Rev. 2-89)
Prescribed by ANSI Std. Z39-18
298-102