Reprinted by permission from ASHRAE Transactions (Vol. 101, Part 1, pp. 217-227).
Copyright 1995 American Society of Heating, Refrigerating and Air-Conditioning Engineers, Inc.

TOWARD A SIMPLIFIED DESIGN METHOD FOR DETERMINING THE AIR CHANGE EFFECTIVENESS

Brian A. Rock, Ph.D.
Associate Member ASHRAE

Michael J. Brandemuehl, Ph.D., P.E.
Member ASHRAE

Ren S. Anderson, Ph.D.
Member ASHRAE

ABSTRACT

This paper describes progress in developing practical air change effectiveness modeling techniques for the design and analysis of air diffusion in occupied rooms. The ultimate goal of this continuing work is to develop a simple and reliable method for determining heating, ventilating, and air-conditioning (HVAC) system compliance with ventilation standards. In the current work, simplified two-region models of rooms are used with six occupancy patterns to find the air change effectiveness. A new measure, the apparent ACH effectiveness, yields the relative ventilation performance of an air diffusion system. This measure can be used for the prediction or evaluation of outside air delivery to the occupied part of a room. The required outside air can be greater or less than that specified by ventilation standards such as ANSI/ASHRAE Standard 62-1989 due to poor or effective air distribution.

INTRODUCTION

The American Society of Heating, Refrigerating and Air-Conditioning Engineers (ASHRAE) and other organizations have been engaged in research and standards development for the evaluation of indoor air quality. Part of the ongoing effort is the development of techniques that evaluate the effectiveness of ventilation. ANSI/ASHRAE Standard 62-1989 (ASHRAE 1989) requires that a certain amount of ventilation air (cfm/person [L/s·person]) be delivered to the occupants of a building. Standard 62-1989 does not adequately address the issue of whether the air being supplied to a room reaches the occupied space. This problem, previously called *ventilation effectiveness*, is now called *air change effectiveness*. Ventilation effectiveness measures the removal of internally generated pollutants, whereas air change effectiveness measures the delivery of ventilation air. Air change effectiveness and a design approach to evaluating it are addressed in this paper. Although applied to U.S. design practices, the method presented in this paper may be extended to other ventilation approaches.

This paper is a revised version of a technical paper (Rock et al. 1992). In recently held ASHRAE meetings, such as the "Requirements for Validation of Air Change Effectiveness" forum at the 1993 Annual Meeting in Denver, it became apparent to the authors that a simplified design method is needed to predict air change effectiveness. Also, standard ASHRAE terminology needs to be applied to air change effectiveness. This revised paper is intended to enhance discussion of these needs and to reach a wider audience than the previous paper.

METHOD TERMINOLOGY

Figure 1 shows ASHRAE terminology for airflows in a system and some suggested terminology and abbreviations for studying these airflows. Also, a "Terminology" section is included near the end of this paper. Some examples of other terms used for *outside air* are *outdoor air*, *fresh air*, and *ventilation air*. The term *fresh air* is not suitable because it implies that the air in the surrounding environment is always of acceptable quality. *Ventilation air* is used in Standard 62-1989 to mean either outside air or suitably treated recirculated air. The use of the term *outside air* eliminates these ambiguities and is used in this paper. If the outside air is not

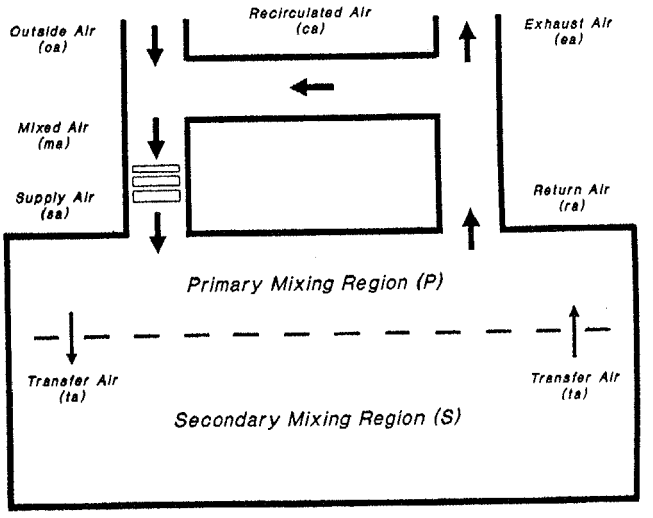

Figure 1 *Some terminology and abbreviations for the study of airflow and indoor air quality.*

Brian A. Rock is an assistant professor in the Architectural Engineering Department at the University of Kansas, Lawrence. **Michael J. Brandemuehl** is an associate professor in the Civil, Environmental, and Architectural Engineering Department at the University of Colorado, Boulder. **Ren S. Anderson** is a senior engineer and program manager at the National Renewable Energy Laboratory, Golden, CO.

of suitable quality, it and/or the recirculated air must be treated to create suitable ventilation air.

This study is limited to the evaluation of two-region models of room airflow. Previously, when two-region mixing models were used for indoor air quality (IAQ) studies, the room was divided into an "occupied zone" and a "ceiling zone." A "zone" has a special meaning in heating, ventilating, and air-conditioning (HVAC) studies, so a different term—*region*—is introduced in this study. In the Laplace transform/block diagram (LTBD) method (Rock et al. 1991a), these regions are completely mixed parts of a room or zone. For two-region room models, the terms *primary mixing region* and *secondary mixing region* recognize that these portions of a room may or may not be occupied. Also, they may have different mixing characteristics or flow patterns.

ROOM AIR DIFFUSION PATTERNS

The ventilation airflow rates specified in Table 2 of ASHRAE Standard 62-1989 are stated for complete mixing in a room. Discussion continues as to whether complete mixing (also known as uniform or perfect mixing) should be used as the reference point for comparison of mixing performance. With complete mixing, the supply air and contaminants are instantly and evenly distributed throughout a room. Anderson and Mehos (1988) and others showed that flow patterns in rooms can be significantly nonuniform. The two nonuniform flow patterns addressed in this paper are shown in Figure 2. The first flow pattern depicted in Figure 2 is created by the entrainment of room air into the supply air jet. This flow arrangement has been called *short-circuiting flow, bypass flow, conventional flow,* a *mixing system,* or a *ceiling-based system.* None of these terms adequately describes the physical problem. A new term introduced in this study is *entrainment flow.* This term recognizes that the flow pattern is created primarily by the entrainment of room air into a jet, and that jet is not necessarily at the ceiling. The entrainment of the jet is dependent on the diffuser, room characteristics, and system operation.

When air flows in a piston-like manner through a room, it is usually called *plug* or *displacement* flow. The second room depicted in Figure 2 has underfloor supply and ceiling-based return, both with many openings so that the air sweeps from bottom to top. Displacement-flow systems may be designed to sweep in any direction. Although most entrainment-flow air diffusion systems are known to provide good thermal comfort and mixing, the performance of displacement-flow air diffusion systems is still being examined. Seppänen et al. (1989) reported that displacement systems can yield excellent air quality and thermal comfort. Floor-to-ceiling displacement flow has been suggested for smoking lounges to encourage the removal of tobacco smoke.

DEFINING REGIONS

Using a two-region model for a room or a zone (Sandberg 1981; Skåret and Mathisen 1983; Janssen 1984), there

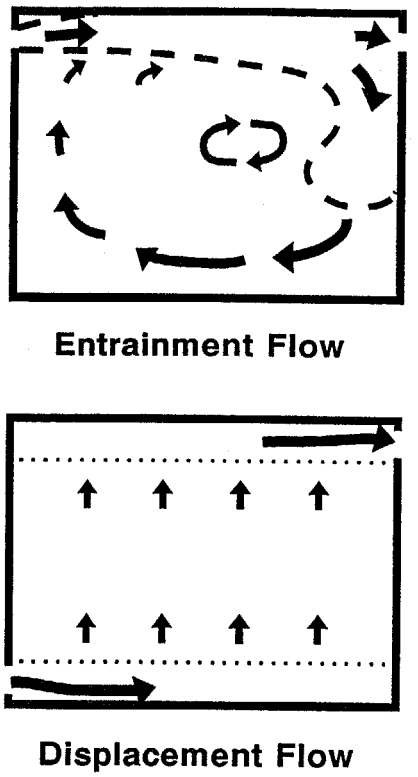

Figure 2 *Entrainment and displacement flow in rooms.*

are six possible combinations of region layout and occupancy. These six geometries are shown in Figures 3 through 5. The two flow patterns shown in Figure 2 (entrainment flow and displacement flow) can be approximated with two-region models. The two regions are defined by their volumes and their orientation with respect to the flow field. In the following models, the secondary region-to-total volume-fraction (V_S^*) is an independent parameter:

$$V_S^* = \frac{V_S}{V_S + V_P} \tag{1}$$

where V_S is the secondary region volume and V_P is the primary region volume. In the entrainment-flow two-region model, the two completely mixed regions of the model are arranged so that the supply air enters and return air leaves from the primary mixing region only. The secondary mixing region receives air only through the movement of air across the boundary between regions (transfer air). This movement of air is caused by the entrainment of air into the supply air jet. In the displacement-flow two-region model, the regions are arranged so that the supply air enters the primary mixing region and the return air leaves the room from the secondary mixing region. A completely mixed room or zone is a special case of both the entrainment and displacement cases where the mixing coefficient (ß) (Sandberg 1981) is infinity or the transfer air fraction (X_{ta}) (Rock et al. 1991a) is one. ß and X_{ta} are defined for the two-region models as

$$\beta \equiv \frac{Q_{ta}}{Q_{sa}}, 0 \le \beta \le \infty; \quad (2)$$

$$X_{ta} \equiv \frac{Q_{ta}}{Q_{sa} + Q_{ta}}, 0 \le X_{ta} \le 1; \quad (3)$$

and

$$\beta = \frac{X_{ta}}{1 - X_{ta}}. \quad (4)$$

Q_{ta} is the transfer airflow rate and Q_{sa} is the supply airflow rate. The related values, ß and X_{ta}, are a second independent parameter used in the models found later in this paper. In this continuing research, simple methods are being investigated for evaluating the independent parameters of these models. One method uses diffuser performance data that exist for a variety of applications. As presented in the *ASHRAE Handbook* chapter on space air diffusion (ASHRAE 1993), the entrainment ratio is

$$\frac{Q_x}{Q_O} = \frac{2 \cdot x}{K' \cdot \sqrt{A_0}} \quad (5)$$

where

Q_x = volumetric flow rate in a jet some distance x from the diffuser face,
Q_o = discharge from the diffuser,
A_o = effective discharge area of the diffuser, and
K' = proportionality constant.

Using Equation 2 and the definition of the entrainment ratio, the mixing coefficient as compared to the entrainment ratio at some distance x from the diffuser is

$$\beta = \frac{Q_{ta}}{Q_{sa}} = \frac{Q_x - Q_O}{Q_O} = \frac{Q_x}{Q_O} - 1. \quad (6)$$

This promising method defines the volumes of the region as well as the location of the regions. Using the entrainment ratio relationship for an isothermal jet created by a round diffuser, the value of the mixing coefficient (ß) is about 10 to 20 for 15- to 25-ft (4.6- to 7.6-m) throws. Using the geometry of the jet, the room, and the occupancy pattern, the volume fractions and locations of the mixing region can be found.

OCCUPANCY IN TWO-REGION ROOMS

Three possibilities exist for the location of room occupants with respect to the two mixing regions. The occupants may be in the primary mixing region, the secondary mixing region, or both. In these ways, the "occupied zone" is either or both of the mixing regions. In these models, the mixing regions may be oriented horizontally or vertically. The first geometry in Figure 3 shows the entrainment-flow case that

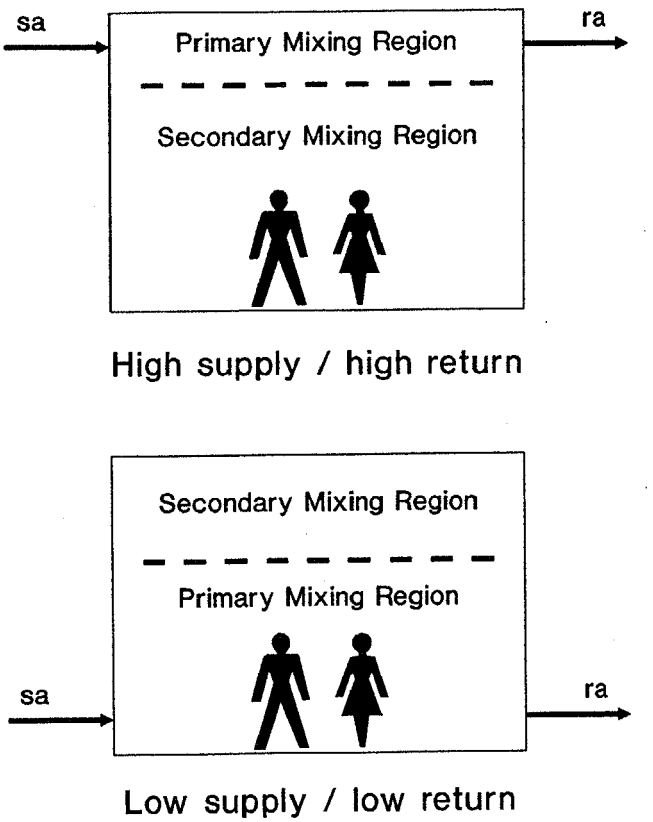

Figure 3 *Entrainment-flow cases with vertical separation of the regions and one region occupied.*

can model many U.S. office spaces. Ceiling-mounted supply air diffusers and return air grilles with the occupants in the secondary mixing region of the room can provide high levels of performance. Poorly applied air distribution systems with this geometry have ventilation problems if the mixing coefficient or transfer air fraction is unusually low. The second geometry in Figure 3 shows an entrainment-flow case that models low-sidewall or floor-mounted diffusers and grilles so that the occupants are in the primary mixing region.

The first geometry in Figure 4 depicts a displacement-flow case. The supply air is introduced at the top of the room and the return air is withdrawn at the bottom of the room. The occupants are located in the secondary mixing region. This geometry is similar to those shown in Figure 3 except that the return air grille has been moved from the primary to the secondary region. The second geometry in Figure 4 depicts the displacement-flow case with the occupants in the primary mixing region and the supply air introduced at or near the floor level. As with the second geometry in Figure 3, the abatement of drafts is an important consideration in the design of a space with this flow arrangement.

Figure 5 shows the entrainment- and displacement-flow cases where both mixing regions are occupied. These situations suggest that if the two-region models are to be used for design or evaluation purposes, the region with the *worst* per-

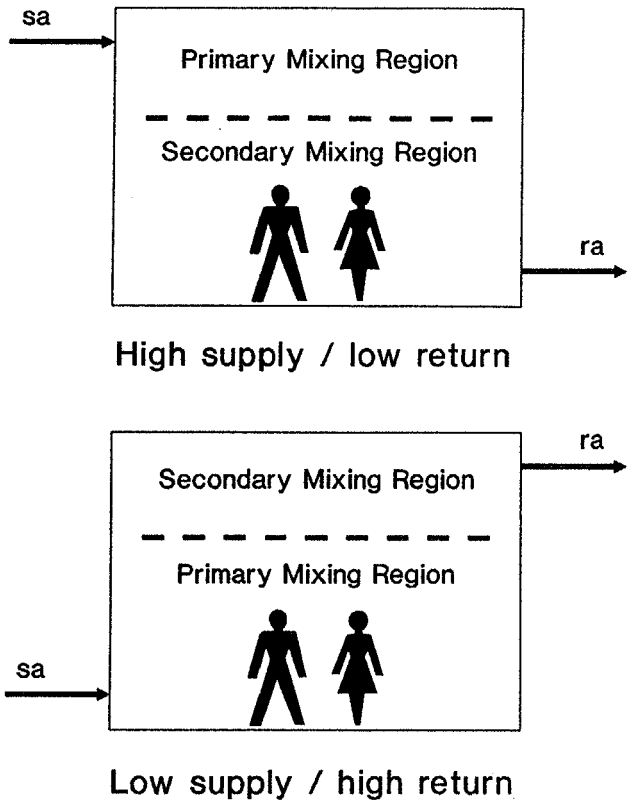

Figure 4 *Displacement-flow cases with vertical separation of the regions and one region occupied.*

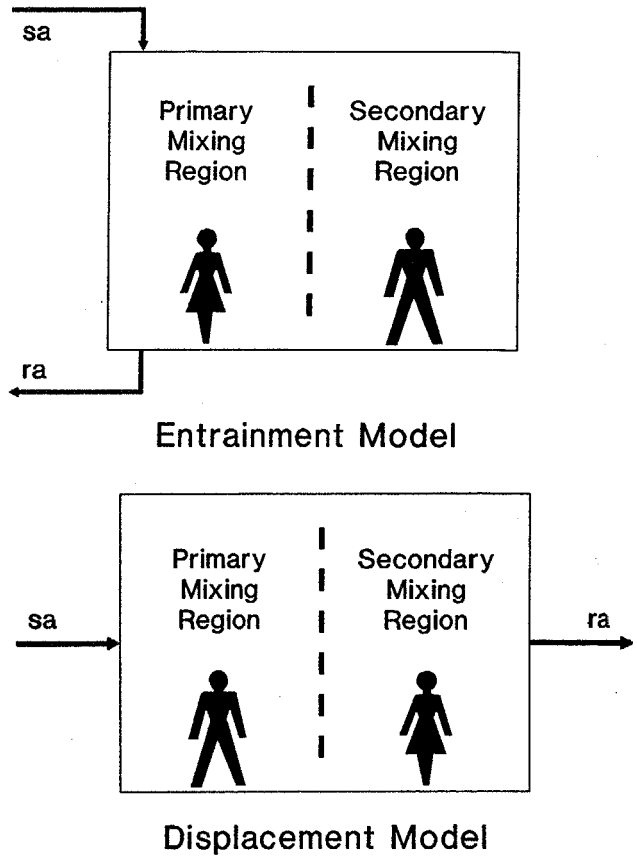

Figure 5 *Entrainment- and displacement-flow cases with horizontal separation of the regions and both regions occupied.*

formance should be the limiting case. For both geometries shown in Figure 5, the worst ventilation performance appears in the secondary mixing regions.

RELATIVE VENTILATION PERFORMANCE

ANSI/ASHRAE Standard 62-1989 specifies that a minimum of 20 cfm (9.44 L/s) ventilation air per person must be delivered to the occupants of an office space. If the delivery of this ventilation air to a completely mixed room is used as the benchmark of performance, air distribution that is better or worse than complete mixing can be given a rating. The rating measure used in the present paper is the "apparent ACH effectiveness (ε_{ACH})," which uses the age-of-air approach. The age of air is a measure of how old air is relative to the time when it entered a space (Sandberg and Sjöberg 1983). The apparent ACH effectiveness is the ratio of the minimum nominal time constant specified using Standard 62-1989 flow rates ($\tau_{oa,62}$) to the local age of air ($t_{age'}$). ε_{ACH} is also equal to the ratio of the apparent local air change rate (ACH) to the minimum outside air change rate ($ACH_{oa,62}$) specified using Standard 62-1989, or

$$\varepsilon_{ACH} = \frac{\tau_{oa,62}}{t_{age'}} = \frac{ACH}{ACH_{oa,62}}. \tag{7}$$

The apparent ACH effectiveness is a local measure that may be evaluated for any point in a room. For a completely mixed room, ε_{ACH} = 1.0 when the current Standard 62 design amount of outside air is being brought into the air distribution system. The apparent ACH effectiveness may be evaluated for part of a room, such as the occupied region. If an occupied region of a room had an apparent ACH effectiveness of less than 1.0, it would fail to meet Standard 62. Air change effectiveness depends strongly on the total system design and operation. As will be demonstrated in a sample office space, for the same external conditions, including the supply airflow rate, the apparent ACH effectiveness for displacement-type flow can be greater than that for complete mixing. The apparent ACH effectiveness of entrainment-type flow can be less than that for complete mixing. The ε_{ACH} is affected by external conditions such as the outside airflow rate and total supply airflow rate. A low-performance (low mixing coefficient) air distribution system can deliver a high air change effectiveness of 1.0 or greater. This can occur if the outside airflow rate and recirculation rate are specified correctly at the design stage or adjusted correctly at the commissioning stage. Both variable-air-volume (VAV) and constant-air-volume (CAV) systems should be evaluated with the outside air and mixing box dampers at the minimum airflow positions for occupied periods.

MODELING THE REGIONS

The Laplace transform/block diagram method can be used to evaluate the age of air and the apparent ACH effectiveness for single- and multiple-region models. The LTBD method is a classic analysis technique for control and electrical systems and has been extended to the study of indoor air quality (Rock et al. 1991a, 1991b). Blocks, transfer functions, distribution points, and flow merges are laid out to model physical problems. Application of the LTBD method to two-region problems yields two slightly different mathematical models for the entrainment and displacement cases. For age-of-air calculations, a step-change in concentration is applied to the outside air intake of the models. A detailed explanation of the LTBD method and models is available in two papers by Rock et al. (1991a, 1991b) and in Rock (1992). Two-region geometries and LTBD models are examined in this paper. Figures 6 and 7 show the layouts and the Laplace transform block diagrams for the two-region entrainment- and displacement-flow cases. These geometries and models allow for a variable transfer air fraction (X_{ta}) and the potential for recirculation of part of the return air by the air distribution system. The degree of recirculation is described by the outside air fraction ($X_{oa} = Q_{oa}/Q_{sa}$).

The results from the LTBD models can be used for the design of ventilation systems. With measurements made in existing spaces, the LTBD model results can also be used to determine compliance with air change effectiveness standards. A computer code using the rapidly solved LTBD models can evaluate various geometries and variables. A detailed understanding of the LTBD modeling approach is not necessary to use the two-region apparent ACH effectiveness method because the technique yields algebraic solutions for the geometries discussed in this paper.

A SAMPLE OFFICE SPACE

Calculation of the air change effectiveness using the two-region method requires knowledge of the initial design supply and ventilation airflow rates, mixing coefficient, vol-

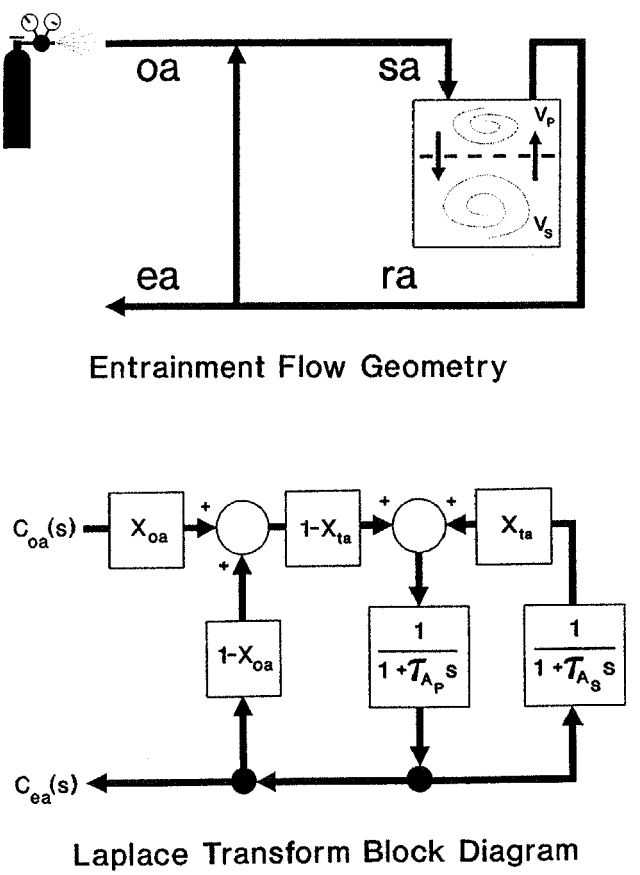

Figure 6 *Layout of an entrainment-flow system with recirculation and an externally supplied tracer gas, and the corresponding Laplace transform block diagram with variable outside air and transfer air fractions.*

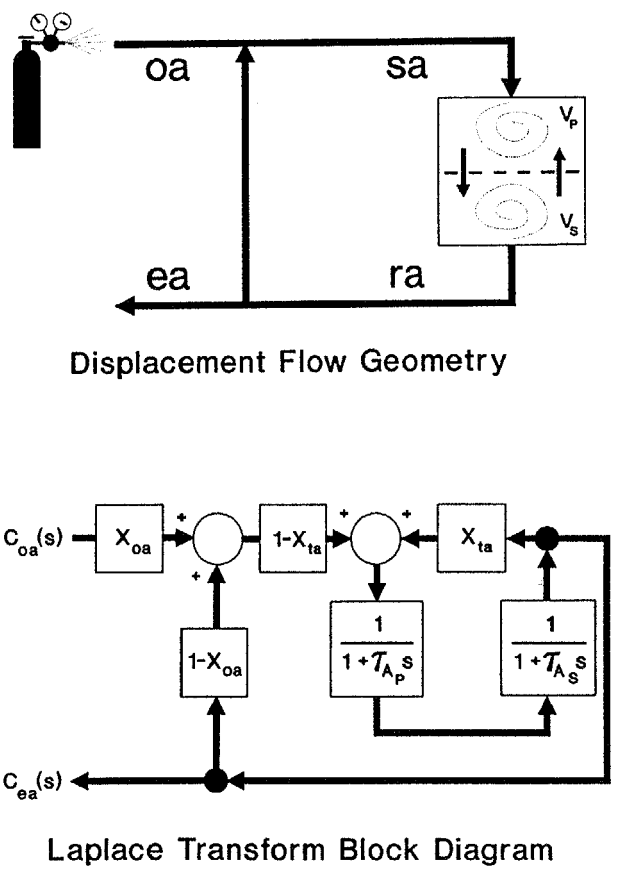

Figure 7 *Layout of the displacement-flow system with recirculation and an externally supplied tracer gas, and the corresponding Laplace transform block diagram with variable outside air and transfer air fractions.*

ume fractions, and location of the mixing regions and occupants. To demonstrate the sensitivity of ventilation performance to variations in room air diffusion, the results of a series of calculations follow for a sample office space. In this sample problem, the mixing coefficient and outside air fraction are varied while the volume fraction is held constant at 0.6. The mixing coefficient and volume fractions are application specific and are not likely to be constant when performing these calculations for a real room. Further information for determination of these variables may be found in Rock (1992). The results presented are for a sample office space with entrainment flow and displacement flow (Figure 2) with the following parameters:

floor area = 1,000 ft^2 (92.9 m^2),
room height = 10 ft (3.05 m),
secondary region to total volume fraction (V_S^*) = 0.6,
occupancy per 1,000 ft^2 of floor area = 7, and
minimum design outside air per person = 20 cfm (9.44 L/s).

The outside airflow rate is held constant at 140 cfm ([66 L/s], 7 people × 20 cfm/person [9.44 L/s]). The supply airflow rate is varied to yield 20%, 40%, and 100% initial design percent outside air, as shown in Table 1. The mixing coefficient, ß, is varied from one to nine by two and the results for complete mixing ($\beta = \infty$) are presented in the following figures.

Figure 8 shows generic results for the LTBD/two-region apparent ACH effectiveness models. Results for the displacement-flow cases lie at or above the line of complete mixing, while the results for the entrainment-flow cases are at or below the complete mixing line. The range of values of the apparent ACH effectiveness (y-axis) will vary according to the problem examined. The x-axis in Figures 8 through 11 is the percentage of outside air in the supply air. However, the flow rate of outside air could be used as shown in Figure 12.

Figure 9 shows the apparent ACH effectiveness as a function of the percentage of outside air and the mixing coefficient when the design minimum Standard 62-1989 ventilation comprises 20% of the supply air. This system uses a large amount of recirculated air (80%) in the supply air. As can be expected, for 20% outside air and complete mixing ($\beta = \infty$), ε_{ACH} is 1. To evaluate this sample room for compliance with an air change effectiveness standard, the geometry from Figures 3 through 5 would first be determined. If the entrainment-flow geometries shown in Figures 3 and 5 apply, the curves below $\beta = \infty$ (complete mixing) would be used to find the apparent ACH effectiveness. For example, an air distribution system with entrainment flow and poor performance is selected (ß = 1). To achieve ventilation performance equivalent to that of a completely mixed space, the minimum design percentage of outside air would have to be *increased* from 20% to about 25%, as shown in Figure 9 for ß = 1. Because this increase in outside air may carry energy and cost penalties, the designer or evaluator may want to investigate other options to increase the ventilation performance.

For the example problem with the low-supply, high-return displacement-flow geometry shown in Figure 4, the curves located above the $\beta = \infty$ line in Figure 9 would be used. In this geometry with displacement flow, it is an advantage to have little or no mixing between regions. For ß = 1, the minimum design percentage of outside air could be *reduced* from 20% to about 18.5% and still comply with ventilation standards that use complete mixing as the benchmark. For the other two-region geometries shown in Figures 3, 4, and 5, the ventilation performance is not dependent on the mixing coefficient. For these geometries, the $\beta = \infty$ line is used. Therefore, if the room being designed or evaluated fits one of these three models well, evaluation of the air change effectiveness is not necessary if ASHRAE Standard 62 ventilation rates are implemented.

Figure 10 shows the same sample office space with a minimum Standard 62-1989 ventilation of 40% outside air. This system has a moderate degree of recirculated air in the supply air. This example models air distribution systems in which there is usually a high temperature difference between the supply and return air. The figure shows that the cost or credit resulting from this geometry and its mixing performance is greater than with the minimum design point of 20% outside air. Figure 11 shows a system with little or no recirculation so that the supply airflow rate may equal the minimum outside airflow rate (100% outside air). This figure shows that the entrainment-flow geometries shown in Fig-

TABLE 1
Flow Rates and Initial Percentage of Outside Air for the Sample Office Space

Initial Design Outside Air (oa,62-89)	Total Room Supply Air (sa)	Initial Design Point (%oa)
140 CFM (66.1 L/s)	700 CFM (330.4 L/s)	20%
140 CFM (66.1 L/s)	350 CFM (165.2 L/s)	40%
140 CFM (66.1 L/s)	140 CFM (66.1 L/s)	100%

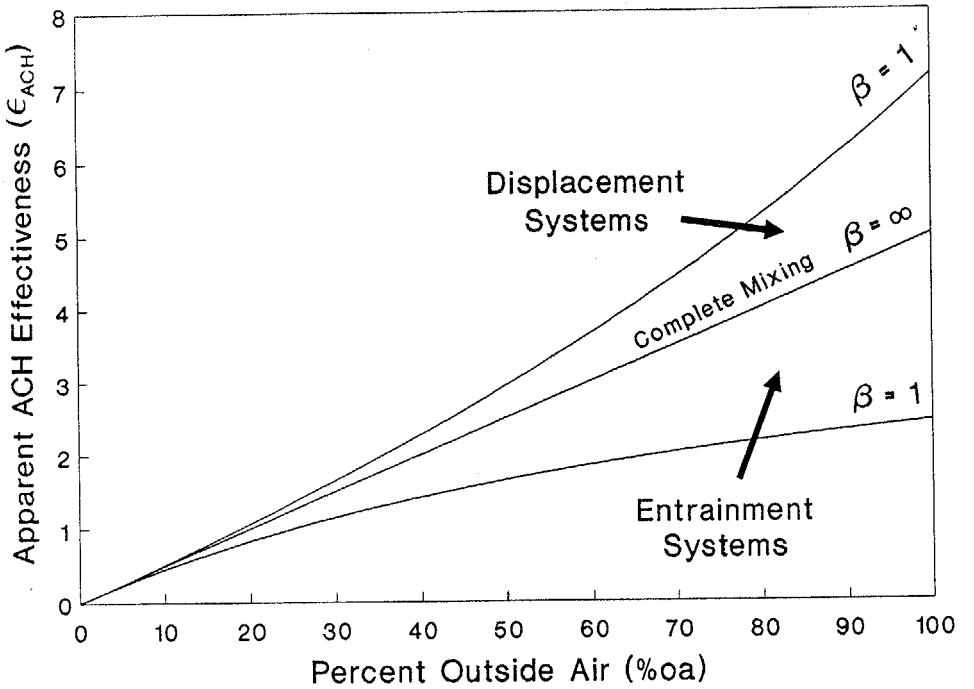

Figure 8 *Generic layout of the apparent ACH effectiveness as compared to the percentage of outside air for the two-region displacement, complete mixing, and entrainment cases.*

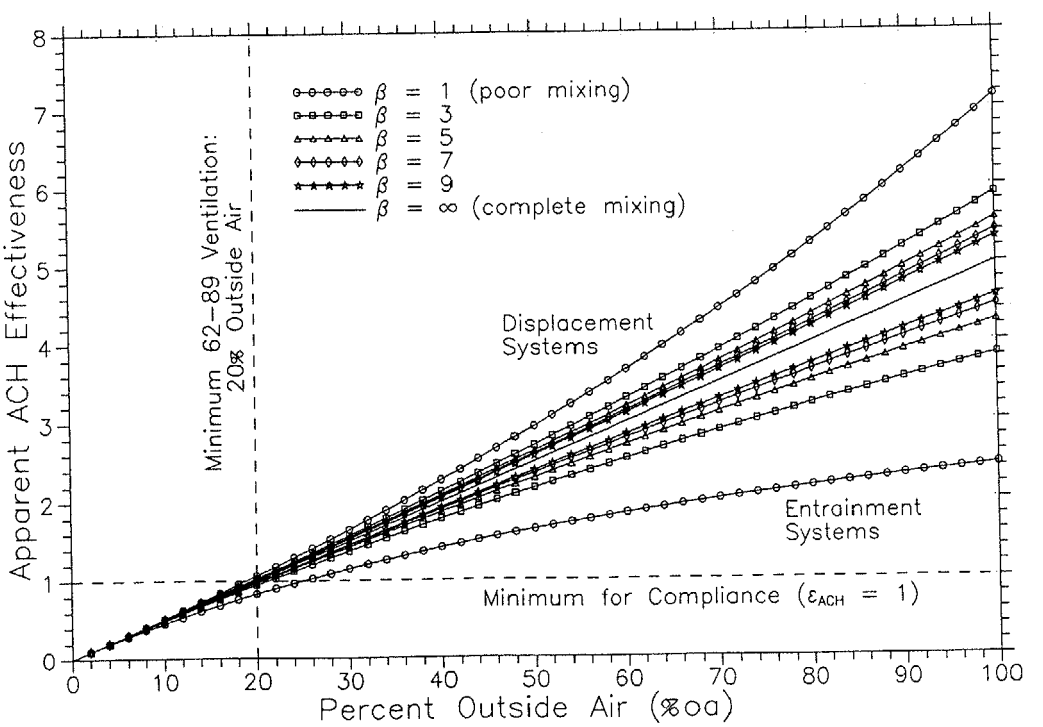

Figure 9 *Apparent ACH effectiveness (ε_{ACH}) as a function of the percentage of outside air and the mixing coefficient (β) for the sample two-region office space with 20% outside air at the design conditions.*

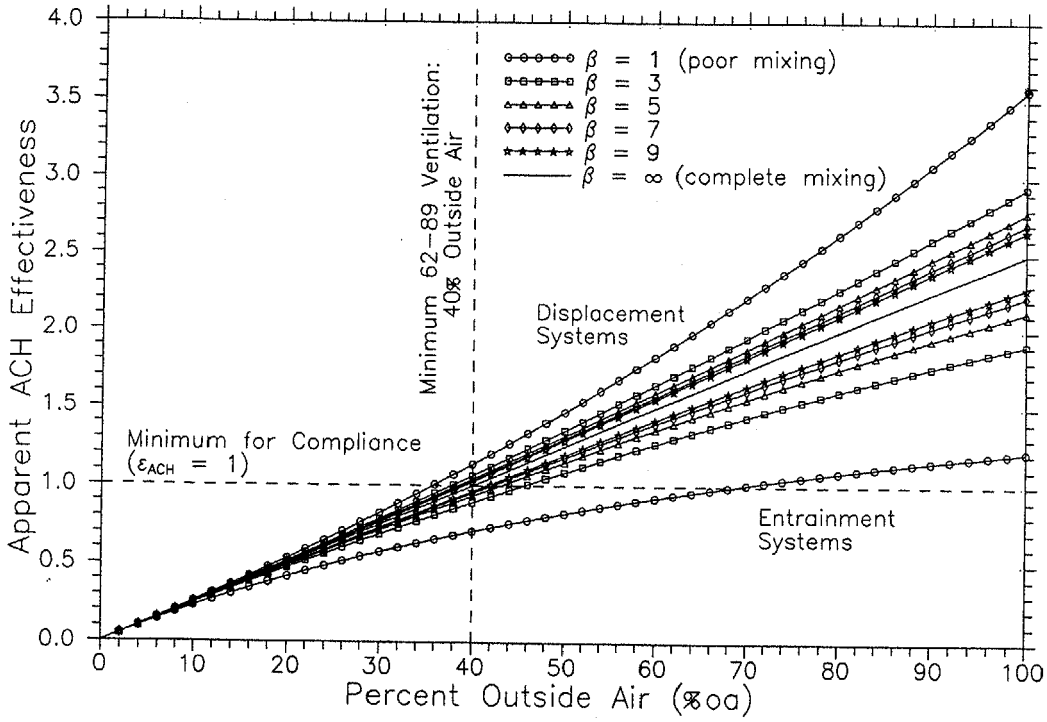

Figure 10 *Apparent ACH effectiveness (ε_{ACH}) as a function of the percentage of outside air and the mixing coefficient (β) for the sample two-region office space with 40% outside air at the design conditions.*

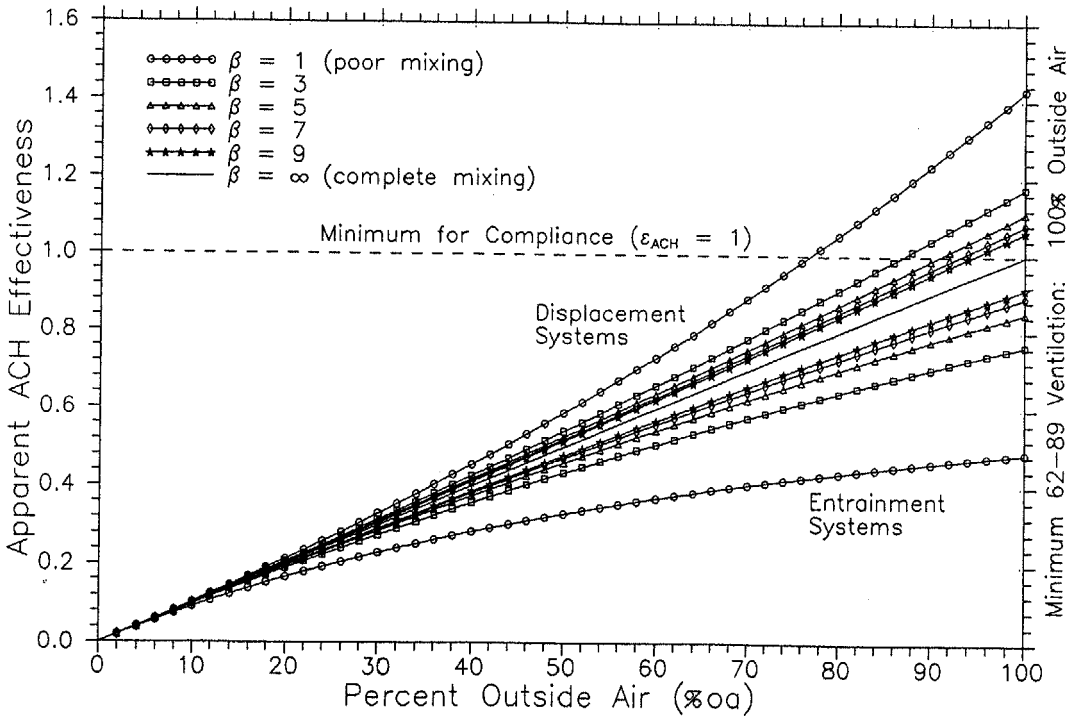

Figure 11 *Apparent ACH effectiveness (ε_{ACH}) as a function of the percentage of outside air and the mixing coefficient (β) for the sample two-region office space with 100% outside air at the design conditions.*

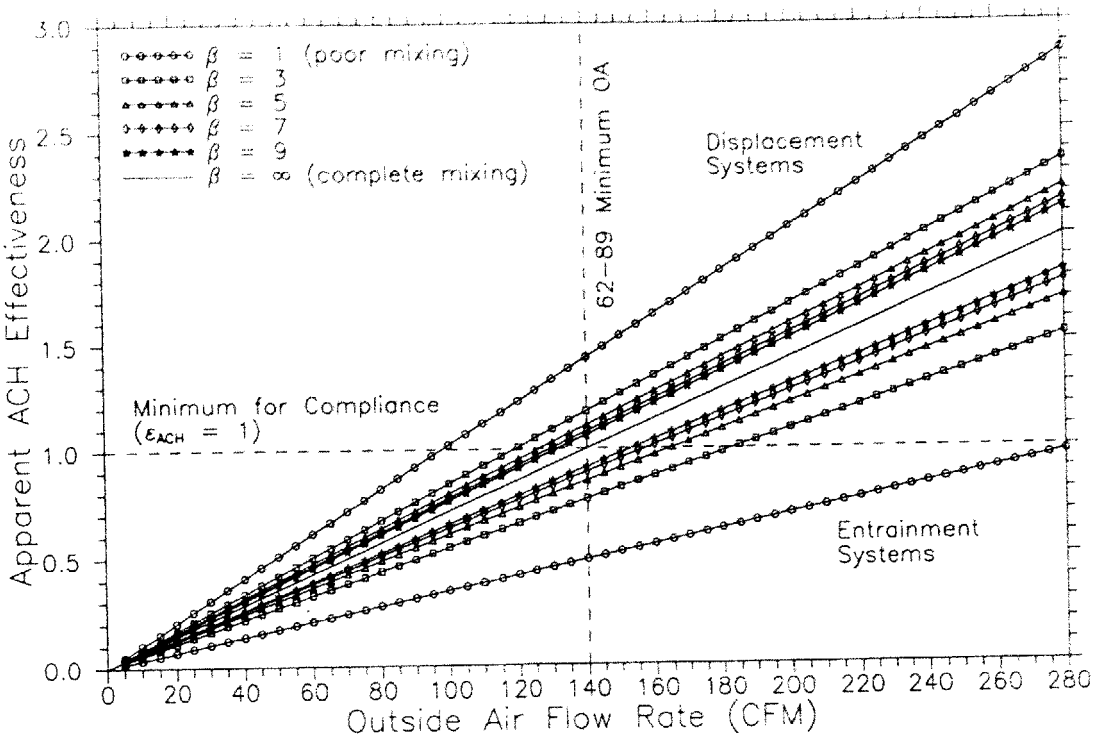

Figure 12 *Apparent ACH effectiveness* (ε_{ACH}) *as a function of the outside airflow rate for the sample two-region office space with 100% outside air (no recirculation).*

ures 3 (first case) and 5 (first case) would always fall below the proposed $\varepsilon_{ACH} = 1$ standard for $\beta < \infty$. To bring these systems into compliance, high-performance diffusers are needed or the minimum outside airflow rate must be increased substantially, as shown in Figure 12. Figures 9 through 12 also show the effect of off-design conditions. For air-handling systems with economizer cycles (where the outside air may exceed the minimum Standard 62-1989 percentage of outside air), the increase in air change effectiveness can be observed in Figures 9 and 10. Also, if the air handler is being operated with less than the minimum Standard 62-1989 percentage of outside air, the reduction in air change effectiveness can be determined.

CONCLUSIONS AND RECOMMENDATIONS

Usable air change effectiveness compliance standards need to include simple design and testing techniques to ensure the delivery of ventilation air to occupants. The method presented in this paper includes the effect of air-handling system recirculation as well as the ventilation effectiveness of the room's air distribution system. If a two-region model is accepted as an adequate compromise between accuracy and simplicity, the method presented here could be developed further for use in both design and determination of code compliance. More research is needed to determine the range of application of the two-region models. Rapid, user-friendly computer codes need to be developed using the LTBD/apparent ACH effectiveness approach.

The mixing coefficients (ß), volume fractions (V^*), and other data required for use of the models presented in this paper are not currently available. Continuing research is evaluating simple, promising methods for determining these values. Detailed information used by one of these methods is already available for simple isothermal jets as a function of diffuser type, location, and other room parameters. Additional research is required for complicated nonisothermal flows in various room geometries. The parameter evaluation methods and supporting data for a variety of applications will be reported in later papers. The resulting data, when used with the method presented in the current paper, will allow designers to predict compliance with Standard 62 without taking ventilation effectiveness measurements.

Currently installed high-recirculation systems should have minimal compliance problems with existing and proposed ventilation standards if proper ventilation rates, such as those included in ANSI/ASHRAE Standard 62-1989, are implemented. Once-through or "heat recovery" systems are much more sensitive to room air distribution when determining the air change effectiveness. Once-through systems will require high-performance diffusers, while high-recirculation systems are less dependent on diffuser selection.

ACKNOWLEDGMENTS

The revised version of this paper was sponsored by the University of Kansas Department of Architectural Engineering. The original research effort was sponsored by the

National Renewable Energy Laboratory (NREL), the Department of Energy (Office of Buildings Technology, Ventilation Research Program, John Talbott, program manager), and the Electric Power Research Institute (Thermal Storage Program, Ron Wendland, program manager). Special thanks to Dr. Paul L. Miller of NREL and the other reviewers whose comments have helped refine this paper.

TERMINOLOGY

air: the atmosphere. The mixture of invisible, odorless,tasteless (and harmless) gases (nitrogen, oxygen, and others) that surrounds the earth (including water vapor, but not including contaminants) (ASHRAE 1991).

air change effectiveness: a group of indoor air quality measures used to determine the effectiveness of ventilation air delivery.

contaminant: an unwanted airborne constituent that may reduce the acceptability of the air (ASHRAE 1989).

displacement flow: a piston- or plug-like room air motion pattern.

entrainment flow: a room air motion pattern that depends on the entrainment of room air into a jet.

fresh air: has the same definition as outside air. "Fresh" air may contain an unacceptable amount of contaminants.

outside air: air taken from the external atmosphere and therefore not previously circulated through the (air diffusion) system (ASHRAE 1989).

recirculated air: air removed from the conditioned space and intended for reuse as supply air (ASHRAE 1989).

return air: air removed from a space to be . . . recirculated or exhausted (ASHRAE 1989).

supply air: that air delivered to the conditioned space and used for ventilation, heating, cooling, humidification, or dehumidification (ASHRAE 1989).

transfer air: the movement of indoor air from one space (or region) to another (ASHRAE 1989).

ventilation air: that portion of the supply air that is (outside) air plus any recirculated air that has been treated (for creating or) maintaining acceptable indoor air quality (ASHRAE 1989).

ventilation effectiveness: a group of indoor air quality measures used to determine the effectiveness of internally generated pollutant removal by an air distribution system.

NOMENCLATURE

ACH	=	air changes per hour
C	=	concentration of a pollutant (lbm/ft^3 [mg/L])
Q	=	volumetric airflow rate (cfm [L/s])
s	=	Laplace domain variable
t_{age}	=	local age of air (min [s])
V_S	=	nondimensional secondary region-to-total volume fraction (Equation 1)
X_{oa}	=	outside air fraction
X_{ta}	=	transfer air fraction (Equation 3)

Greek Symbols

ß	=	Sandberg's mixing coefficient or coupling factor (Equation 2)
ε	=	air change effectiveness
ε_{ACH}	=	apparent ACH effectiveness (Equation 7)
τ	=	time constant (min [s])
τ_A	=	air change time constant (min [s])
τ_N	=	nominal time constant (min [s])

Subscripts

ca	=	recirculated air
ea	=	exhaust air
oa	=	outside air
oa,62	=	minimum required ASHRAE Standard 62-1989 outside air
P	=	primary mixing region
ra	=	return air
S	=	secondary mixing region
sa	=	supply air
ta	=	transfer air

REFERENCES

Anderson, R., and M. Mehos. 1988. Evaluation of indoor air pollutant control techniques using scale experiments. In *IAQ '88*, pp. 193-208. Atlanta: American Society of Heating, Refrigerating and Air-Conditioning Engineers, Inc.

ASHRAE. 1989. *ANSI/ASHRAE Standard 62-1989, Ventilation for acceptable indoor air quality.* Atlanta: American Society of Heating, Refrigerating and Air-Conditioning Engineers, Inc.

ASHRAE. 1991. *ASHRAE terminology of heating, ventilation, air conditioning, and refrigeration*, 2d ed. Atlanta: American Society of Heating, Refrigerating and Air-Conditioning Engineers, Inc.

ASHRAE. 1993. *1993 ASHRAE Handbook—Fundamentals*, chap. 31, "Space Air Diffusion," p. 31.11. Atlanta: American Society of Heating, Refrigerating and Air-Conditioning Engineers, Inc.

Janssen, J.E. 1984. Ventilation stratification and air mixing. *Indoor Air* 5: 43-48.

Rock, B.A. 1992. Characterization of transient pollutant transport, dilution, and removal for the study of indoor air quality. Ph.D. dissertation. Boulder: University of Colorado.

Rock, B.A., R. Anderson, and M.J. Brandemuehl. 1991a. Modeling of ventilation system performance using Laplace transform techniques, part 1: Method. *Proceedings of the ASHRAE/CIB Healthy Buildings—IAQ '91*

Conference, pp. 241-244. Atlanta: American Society of Heating, Refrigerating and Air-Conditioning Engineers, Inc.

Rock, B.A., R. Anderson, and M.J. Brandemuehl. 1991b. Modeling of ventilation system performance using Laplace transform techniques, part 2: Applications. *Proceedings of the ASHRAE/CIB Healthy Buildings—IAQ '91 Conference*, pp. 245-248. Atlanta: American Society of Heating, Refrigerating and Air-Conditioning Engineers, Inc.

Rock, B.A., R. Anderson, and M.J. Brandemuehl. 1992. Simplified air change effectiveness modeling. NREL Technical Paper 432-4737. Golden, CO: National Renewable Energy Laboratory.

Sandberg, M. 1981. What is ventilation efficiency? *Building and Environment* 16: 123-135.

Sandberg, M., and M. Sjöberg. 1983. The use of moments for assessing air quality in ventilated rooms. *Building and Environment* 18: 181-197.

Seppänen, O.A., W.J. Fisk, J. Eto, and D.T. Grimsrud. 1989. Comparison of conventional mixing and displacement air-conditioning and ventilating systems in U.S. commercial buildings. *ASHRAE Transactions* 95(2): 1028-1040.

Skåret, E., and H.M. Mathisen. 1983. Ventilation efficiency—A guide to efficient ventilation. *ASHRAE Transactions* 89(2B): 480-495.