July 1999 • NREL/TP-580-26157

Technical Report

Lignocellulosic Biomass to Ethanol Process Design and Economics Utilizing Co-Current Dilute Acid Prehydrolysis and Enzymatic Hydrolysis Current and Futuristic Scenarios

Robert Wooley, Mark Ruth, John Sheehan, and Kelly Ibsen
Biotechnology Center for Fuels and Chemicals

Henry Majdeski and Adrian Galvez
Delta-T Corporation

National Renewable Energy Laboratory

1617 Cole Boulevard
Golden, Colorado 80401-3393

NREL is a U.S. Department of Energy Laboratory
Operated by Midwest Research Institute • Battelle • Bechtel

Contract No. DE-AC36-98-GO10337

July 1999 • NREL/TP-580-26157

Lignocellulosic Biomass to Ethanol Process Design and Economics Utilizing Co-Current Dilute Acid Prehydrolysis and Enzymatic Hydrolysis Current and Futuristic Scenarios

Robert Wooley, Mark Ruth, John Sheehan, and Kelly Ibsen
Biotechnology Center for Fuels and Chemicals

Henry Majdeski and Adrian Galvez
Delta-T Corporation

Prepared under Task No. BF992210

National Renewable Energy Laboratory

1617 Cole Boulevard
Golden, Colorado 80401-3393

NREL is a U.S. Department of Energy Laboratory
Operated by Midwest Research Institute • Battelle • Bechtel

Contract No. DE-AC36-98-GO10337

NOTICE

This report was prepared as an account of work sponsored by an agency of the United States government. Neither the United States government nor any agency thereof, nor any of their employees, makes any warranty, express or implied, or assumes any legal liability or responsibility for the accuracy, completeness, or usefulness of any information, apparatus, product, or process disclosed, or represents that its use would not infringe privately owned rights. Reference herein to any specific commercial product, process, or service by trade name, trademark, manufacturer, or otherwise does not necessarily constitute or imply its endorsement, recommendation, or favoring by the United States government or any agency thereof. The views and opinions of authors expressed herein do not necessarily state or reflect those of the United States government or any agency thereof.

Available to DOE and DOE contractors from:
Office of Scientific and Technical Information (OSTI)
P.O. Box 62
Oak Ridge, TN 37831
Prices available by calling 423-576-8401

Available to the public from:
National Technical Information Service (NTIS)
U.S. Department of Commerce
5285 Port Royal Road
Springfield, VA 22161
703-605-6000 or 800-553-6847
or
DOE Information Bridge
http://www.doe.gov/bridge/home.html

Printed on paper containing at least 50% wastepaper, including 20% postconsumer waste

Abstract

The National Renewable Energy Laboratory (NREL) has undertaken a complete review and update of the process design and economic model for the biomass-to-ethanol process based on co-current dilute acid prehydrolysis, along with simultaneous saccharification (enzymatic) and co-fermentation. The process design includes the core technologies being researched by the U.S. Department of Energy (DOE): prehydrolysis, simultaneous saccharification and co-fermentation, and cellulase enzyme production. In addition, all ancillary areas—feed handling, product recovery and purification, wastewater treatment lignin burner and boiler-turbogenerator, and utilities—are included. NREL engaged Delta-T Corporation to assist in the process design evaluation, the process equipment costing, and overall plant integration. The process design and costing for the lignin burner and boiler turbogenerator has been reviewed by Reaction Engineering Inc. and the wastewater treatment by Merrick & Company. An overview of both reviews is included here.

The purpose of this update was to ensure that the process design and equipment costs were reasonable and consistent with good engineering practice for plants of this type using available technical data. For the non-research areas this means using equipment and process approaches as they are currently being used in industrial applications. For areas currently being researched by NREL, we used the best research estimates of near-term data to develop a process design and equipment specifications consistent with existing similar commercial operations.

This work has resulted in an economic model that can be used to predict the cost of producing ethanol from cellulosic biomass using this technology if a plant were to be built in the next few years. The model was also extended using technology improvements that are expected to be developed based on the current DOE research plan. Future process designs and cost estimates are given for the years 2005, 2010, and 2015.

The process design and economic model will also be useful for predicting the cost benefits of proposed research. Proposed research results can be translated into modifications of the process design and the economic impact assessed. This will allow DOE, NREL, and other researchers to set priorities on future research based on its potential to reduce the cost of producing ethanol.

Table of Contents

I Introduction 1
I.1 Approach 2
I.2 Process Overview 4
I.3 Plant Size 6
I.3.1 Switchgrass 6
I.3.2 Corn Stover 7
I.3.3 The Effect of Distance on Collection Costs 7
I.3.4 Choice of Plant Size 8
I.3.5 Other Considerations 9
I.4 Feedstock and its Composition 10

II Process Design and Cost Estimating 11
II.1 Feedstock Storage and Handling – Area 100 (PFD-P100-A101) 11
II.1.1 Overview 11
II.1.2 Design Basis 11
II.1.3 Cost Estimation 12
II.2 Pretreatment and Hydrolyzate Conditioning – Area 200 (PFD-P100-A201-3) 12
II.2.1 Overview 12
II.2.2 Design Basis Description 13
II.2.3 Cost Estimation 17
II.3 Simultaneous Saccharification and Co-Fermentation (SSCF) – Area 300 (PFD-P100-A301-2) 18
II.3.1 Overview 18
II.3.2 Design Basis Description 18
II.3.3 Cost Estimation 23
II.4 Enzyme Production – Area 400 (PFD-P100-A401-2) 23
II.4.1 Overview 23
II.4.2 Design Basis Description 24
II.4.3 Cost Estimation 28
II.5 Product Recovery and Water Recovery (Distillation, Dehydration and Evaporation) Area 500 (PFD-P100-A501-4) 31
II.5.1 Overview 31
II.5.2 Design Basis Description 33
II.5.2.1 Physical Property Model and Parameters 34
II.5.3 Cost Estimation 36
II.6 Wastewater Treatment – Area 600 (PFD-P100-A601-3) 36
II.6.1 Overview 36
II.6.2 Design Basis Description 38
II.6.3 Cost Estimation 38
II.7 Product and Feed Chemical Storage – Area 700 (PFD-P100-A701) 39
II.7.1 Overview 39
II.7.2 Design Basis Description 39
II.7.3 Cost Estimation 39
II.8 Burner, Boiler and Turbogenerator – Area 800 (PFD-P100-A801-3) 40
II.8.1 Overview 40
II.8.2 Design Basis Description 41

II.8.3 Cost Estimation 43
II.9 Utilities – Area 900 (PFD-P100-A901-3) 44
II.9.1 Overview 44
II.9.2 Design Basis Description 45
II.9.3 Cost Estimation 46

III Process Economics 47
III.1 Analysis Procedure 47
III.1.1 Total Project Investment 47
III.1.2 Variable Operating Costs 50
III.1.3 Fixed Operating Costs 51
III.1.4 Discounted Cash Flow Analysis and the Selling Cost of Ethanol 53

IV Futuristic Cases 56
IV.1 Future Technology Pathways for Cost Reduction 56
IV.1.1 Cellulase Enzyme Development 57
IV.1.2 Fermentation Organism Development 58
IV.1.3 Process Development and Integration 58
IV.1.4 Long Term Potential for Agricultural Biotechnology 59
IV.2 Economics of Futuristic Cases 60
IV.2.1 Near Term, Best of Industry 61
IV.2.2 Future Case, Year 2005 61
IV.2.3 Future Case, Year 2010 62
IV.2.4 Future Case, Year 2015 62
IV.3 Summary of Futuristic Cases 63

V. Improvements and Extension to the Model Planned or Currently Underway 66
V.1 Burner/Boiler Turbo-generator Model Improvements 66
V.2 Enzyme Production Optimization 66
V.3 Pretreatment Reactor Costs 66
V.4 Liquid Solid Separations Costs 66
V.5 Lignin Gasification and Gas Turbine Power Generation 66

References 67

Appendix A – NREL Biofuels Process Design Database Description and Summary
Appendix B – Individual Equipment Costs Summary
Appendix C – Chemical Costs and Sources
Appendix D – Discounted Cash Flow Rate of Return Summary
Appendix E – Comparison of Experimentally Measured and Modeled Information
Appendix F – Other Summary Model Results
Appendix G – Process Flow Diagrams

Figures

Fig. 1 NREL's Approach to Process Design and Economic Analysis 2
Fig. 2 Overall Process, PFD-P100-A000.....5
Fig. 3 Collection Distance as a Function of Plant Size for Switchgrass and Corn Stover.....7
Fig. 4 Hauling Charges for Corn Stover as a Function of Distance 8
Fig. 5 The Effect of Plant Size on Incremental Feedstock Cost 9
Fig. 6 Pretreatment Process Area Overview, PFD-P100-A200.....14
Fig. 7 SSCF Seed Batch Cycles.....19
Fig. 8 Batch Cycles for Cellulase Seed and Production Fermentation.....25
Fig. 9 Required Cellulase Reactor Air Flow as a Function of Vessel H/D and Agitator Power 29
Fig. 10 Required Cellulase Reactor Air Flow as a Function of Feed Oxygen Concentration.....29
Fig. 11 Overall Ethanol Cost as a Function of Cellulase Reactor H/D.....30
Fig. 12 Overall Ethanol Cost as a Function of Cellulase Feed Oxygen Concentration.....30
Fig. 13 Distillation System Overview, PFD-P100-A500.....32
Fig. 14 Wastewater Treatment process Overview, PFD-P100-A600 37
Fig. 15 CFBC/Turbogenerator Energy Balance 40
Fig. 16 Cost Contribution Details From Each Process Area…… 56
Fig. 17 Future Projection of the Cost of Ethanol Production from Cellulosic Biomass.....63
Fig. 18 Cost Breakdown of Current and Future Cases…….. 64
Fig. 19 Future Projection of Ethanol Yield from Cellulosic Biomass.....64
Fig. 20 Future Projection of the Cost of Ethanol as a Function of Feedstock Cost.....65

Tables

Table 1 Feedstock Composition 10
Table 2 Pretreatment Reactor Conditions 13
Table 3 Pretreatment Hydrolyzer Reactions and Conversions 15
Table 4 Coupon Corrosion Data on Several Metals 18
Table 5 Seed Train Specifications 20
Table 6 SSCF Seed Train Reactions and Conversion 20
Table 7 SSCF Production Specifications 21
Table 8 Production SSCF Saccharification Reactions and Conversions 21
Table 9 SSCF Fermentation Reactions and Conversions 22
Table 10 Production SSCF Contamination Loss Reactions 22
Table 11 Cellulase Production Parameters 24
Table 12 Cellulase Production Nutrient Requirements 26
Table 13 NRTL Activity Coefficient Model Parameters 35
Table 14 Vapor Pressure Model Parameters 36
Table 15 Comparison of Sending Evaporator Syrup to the Burner or Wastewater Treatment 38
Table 16 Boiler Costs 43
Table 17 Installation Factors 48
Table 18 Chemical Engineering Purchased Equipment Index 48
Table 19 Chem Systems Additional Cost Factors 49
Table 20 Total Installed Equipment Costs by Process Area 50
Table 21 Total Project Investment 50
Table 22 Variable Operating Costs 51
Table 23 Inorganic Chemical Index 51
Table 24 Fixed Operating Costs 52
Table 25 Labor Index 53
Table 26 Construction Activities and Cash Flow 54
Table 27 Discounted Cash Flow Parameters 55
Table 28 Near Term Base Case Results Summary 55
Table 29 Out Year Parameter Changes 60
Table 30 Near Term, Best of Industry Improvements from Base Case 61
Table 31 Year 2005 Improvements from Best of Industry 62
Table 32 Year 2010 Improvements from Year 2005 62
Table 33 Year 2015 Improvements from Year 2010 63

I.0 Introduction

The U.S. Department of Energy (DOE) is promoting the development of ethanol from lignocellulosic feedstocks as an alternative to conventional petroleum transportation fuels. Programs being sponsored by DOE range from basic research to develop better cellulose hydrolysis enzymes and ethanol-fermenting organisms, to engineering studies of potential processes, to co-funding initial ethanol from lignocellulosic biomass demonstration and production facilities. This research is conducted by various national laboratories, including the National Renewable Energy Laboratory (NREL) and Oak Ridge National Laboratory (ORNL), as well as by universities and private industry. Engineering and construction companies and operating companies are generally conducting the engineering work.

There are two primary reasons for NREL's Process Engineering team to investigate the complete process design and economics of these types of plants. First, this effort helps to direct research by developing a base case of the current process design and economics. Once the base case is developed, the proposed research and its anticipated results are translated into a new design, the economics (the anticipated results of proposed research) are determined, and this is compared to the base case. Following this process for several proposed research projects allows DOE to make funding decisions based on which projects have the greatest potential to lower the cost of ethanol production. Complete process design and economics are required for such studies, because a new proposal in one research area may have a large effect on another process area that is not generally part of the research program, such as product recovery or waste treatment. The impact on other areas of the process can have a significant impact on the economics of the proposed research.

Second, this investigation allowed us to develop an absolute cost of the production of ethanol based on process and plant design assumptions. In reviewing and establishing research directions, only relative cost differences are important. However, to be able to compare the economics of ethanol with other fuels, the baseline absolute cost is required. To that end, we are making the best possible attempt to develop cost estimates that are consistent with applicable engineering and construction practices for facilities of this type. To do so, the complete process, including newly researched areas and industry-available process components must be designed and their costs developed. For the current level of design, we consider the capital cost estimate to be at the conceptual level.

To improve the plant cost estimates that affect the absolute cost of ethanol production, NREL contracts with industry-knowledgeable turnkey companies such as Delta-T Corporation (Delta-T) to assist in preparing, reviewing, and estimating costs for the process design. Delta-T has worked with NREL process engineers over the last year to review all the process design and equipment costs (with the exclusion of wastewater treatment and the burner-boiler system, which were reviewed by Merrick Engineering[1] and Reaction Engineering, Inc.[2] [REI], respectively). For the plant areas that are actively being investigated under DOE programs (e.g., prehydrolysis, cellulase enzyme production, and simultaneous saccharification and co-fermentation [SSCF]), Delta-T used the results of the DOE-sponsored research to identify process design criteria and equipment requirements. These were used as a basis for sizing and costing major equipment components in the facility. The results of Merrick Engineering's work on wastewater treatment[3] and REI's work on the burner/boiler[4] is also included here.

I.1 Approach

Developing a model that describes the technical process and its economics requires inputs from many different areas. Figure 1 describes the approach used here.

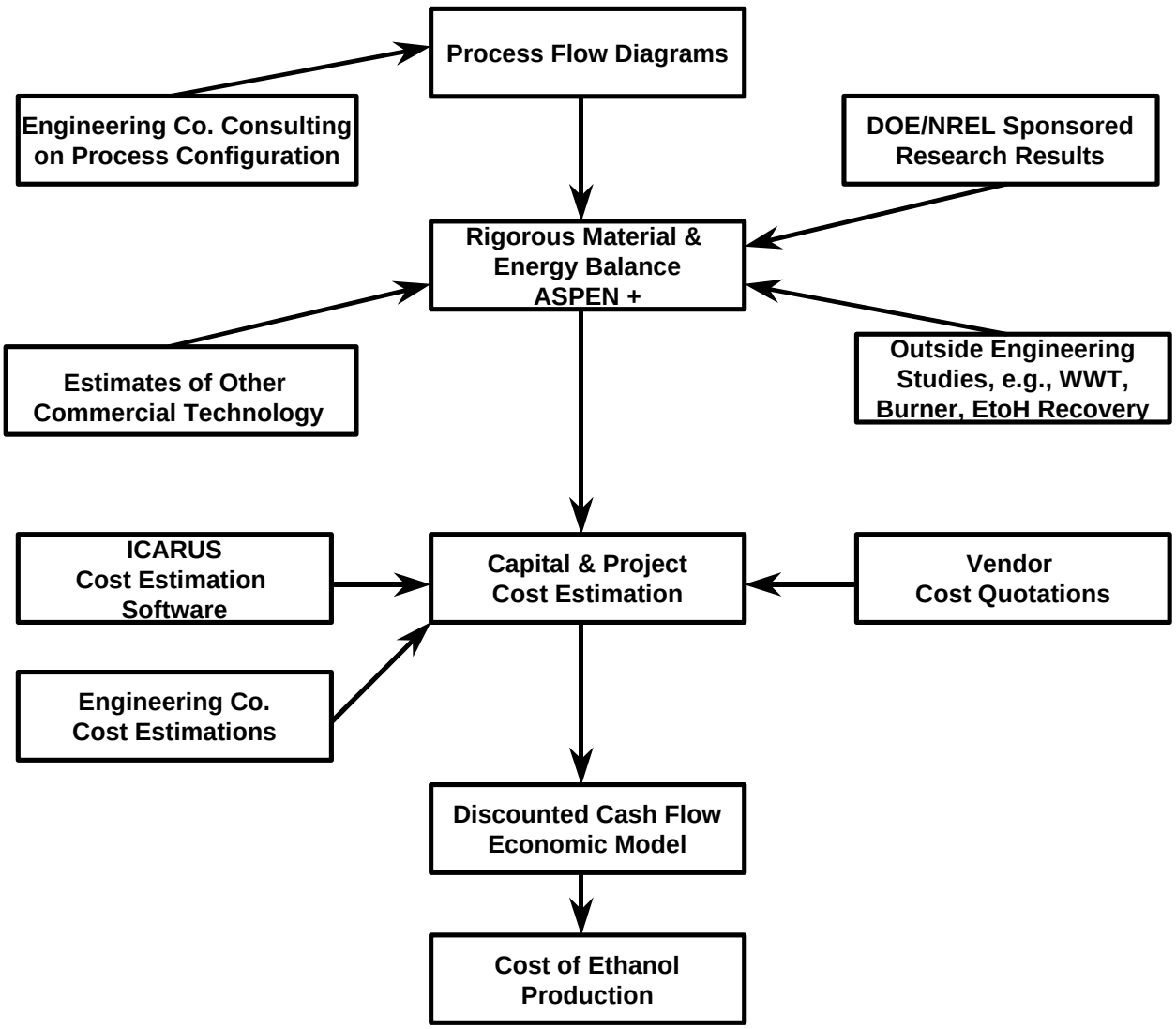

Figure 1. NREL's Approach to Process Design and Economic Analysis

The first step to any process design is to develop a set of process flow diagrams (PFDs). Appendix G contains the PFDs we used. Using the arrangement of the equipment shown, a mass and energy balance was developed within an ASPEN Plus[5] model. This model consists of 144 unit operation blocks, 668 streams (462 material and 206 heat or work), 57 components, and 70 control blocks. The overall model is thermodynamically rigorous and uses built-in physical properties as well as properties developed at NREL[6]. The individual unit models are thermodynamically consistent and can be either rigorous (for

example, the simulation of the distillation) or simple. The reactors could be modeled with kinetic expressions, but because of the level of development of the experimental data, they were modeled as experimentally determined conversions of specific reactions. This type of model still satisfies the rigorous mass and energy balance. Other unit operations, such as liquid-solid separations, are typically modeled with a estimated fixed solids removal and liquid retention in the solids stream.

Using the PFDs, complete with the mass and energy balance information from the ASPEN model, we performed a detailed equipment design for each piece of equipment. This equipment design (and cost estimate) is detailed in the NREL process database (see Appendix A). Finally, from the detailed equipment design, we developed an individual purchase and installation cost.

Equipment costs were obtained from vendor quotations when possible, especially for uncommon equipment such as pretreatment reactors or ion exchange equipment. These costs reflect the base case for which the equipment was designed. If process changes are made and the equipment size changes, the equipment is not generally re-costed in detail. Using the following exponential scaling expression, the cost was determined by scaling based on the new size or some other characteristic related to the size.

$$New\ Cost = Original\ Cost \left(\frac{New\ Size*}{Original\ Size*} \right)^{\exp}$$

* or characteristic linearly related to the size

If the size of the equipment is known to change linearly with the inlet flow, that can be used for scaling. Another characteristic of the size might be the heat duty for a heat exchanger if the ΔT is known not to change. Generally these related characteristics are easier to calculate and give the same result as resizing the equipment each time. For some equipment, nothing can be easily related to the size, so it must be resized with each process change.

The scaling exponent (exp) was obtained either from vendor quotes (if two quotes at different sizes were obtained) or from a standard reference, such as Garrett.[7] The installation costs were taken from Delta-T's experience and are explained in more detail in the economic analysis section.

Once the scaled, installed equipment costs were determined, we applied various overhead and contingency factors to determine a total plant investment cost. That cost, along with the plant operating expenses (generally developed from the ASPEN model) was used in a discounted cash flow analysis to determine the cost of ethanol production, using a set discount rate. For the analysis done here, the ethanol production cost is the primary comparison tool.

Futuristic cases are developed in a fashion similar to evaluating research proposals. Scenarios, based on what might be developed after several years of research, are converted to process designs and the cost of ethanol production is evaluated. These projections are only as good as the estimation of the future technology developments.

Even though one aim of this work was to develop the absolute cost of ethanol for use in comparison to other fuels, it should be noted that ethanol and possibly electricity are the only products of these plants. Certainly, smaller volume niche products will emerge, products that can also be produced from the biomass-derived sugars and that will have a significantly higher profit margin. When these other products

and their selling prices are figured into the analysis, the cost of ethanol will decrease, just as the cost of gasoline is lowered by the sale of other petroleum products of crude oil.

I.2 Process Overview

The process being analyzed here can be briefly described as using co-current dilute acid prehydrolysis of the lignocellulosic biomass with simultaneous enzymatic saccharification of the remaining cellulose and co-fermentation of the resulting glucose and xylose to ethanol. In addition to these unit operations, the process involves feedstock handling and storage, product purification, wastewater treatment, enzyme production, lignin combustion, product storage, and other utilities. In all, the process is divided into nine areas (see Figure 2).

The feedstock, in this case hardwood chips, is delivered to the feed handling (A100) area for storage and size reduction. From there the biomass is conveyed to pretreatment and detoxification (A200). In this area the biomass is treated with dilute sulfuric acid at a high temperature for a very short time, liberating the hemicellulose sugars and other compounds. Ion exchange and overliming is required to remove compounds liberated in the pretreatment that will be toxic to the fermenting organism. Detoxification is applied only to the liquid portion of the hydrolysis stream.

After detoxification, a portion of the hydrolyzate slurry is split off to enzyme production (A400). In enzyme production, seed inoculum is grown in a series of progressively larger aerobic batch fermenters. The inoculum is then combined with additional hydrolyzate slurry and nutrients in large-production aerobic fermenters to produce the enzyme needed for saccharification.

Simultaneous saccharification and co-fermentation (A300) of the detoxified hydrolyzate slurry is carried out in a series of continuous anaerobic fermentation trains. The fermenting organism *Zymomonas mobilis* is grown in progressively larger batch anaerobic fermentations. The inoculum, along with cellulase enzyme from area A400 and other nutrients, is added to the first fermenter. After several days of saccharification and fermentation, most of the cellulose and xylose will have been converted to ethanol. The resulting beer is sent to product recovery.

Product recovery (A500) consists of distilling the ethanol away from the water and residual solids. A mixture of nearly azeotropic water and ethanol is purified to pure ethanol using vapor-phase molecular sieves. Solids from the distillation bottoms are separated and sent to the boiler. Concentration of the distillation bottoms liquid is performed by evaporation, using waste heat. The evaporated condensate is returned to the process as fairly clean condensate and the concentrated syrup is sent to the burner.

Part of the evaporator condensate, along with other wastewater, is treated by anaerobic and aerobic digestion (A600). The biogas (high in methane) from the anaerobic digestion is sent to the burner for heat recovery. The treated water is considered suitable for recycle and is returned to the process.

The solids from distillation, the concentrated syrup from the evaporator, and biogas from anaerobic digestion are combusted in a fluidized bed combustor (A800) to raise steam for process heat. The majority of the steam demand is in the pretreatment reactor and distillation areas. Generally, the process produces excess steam that is converted to electricity for use in the plant and for sale to the grid.

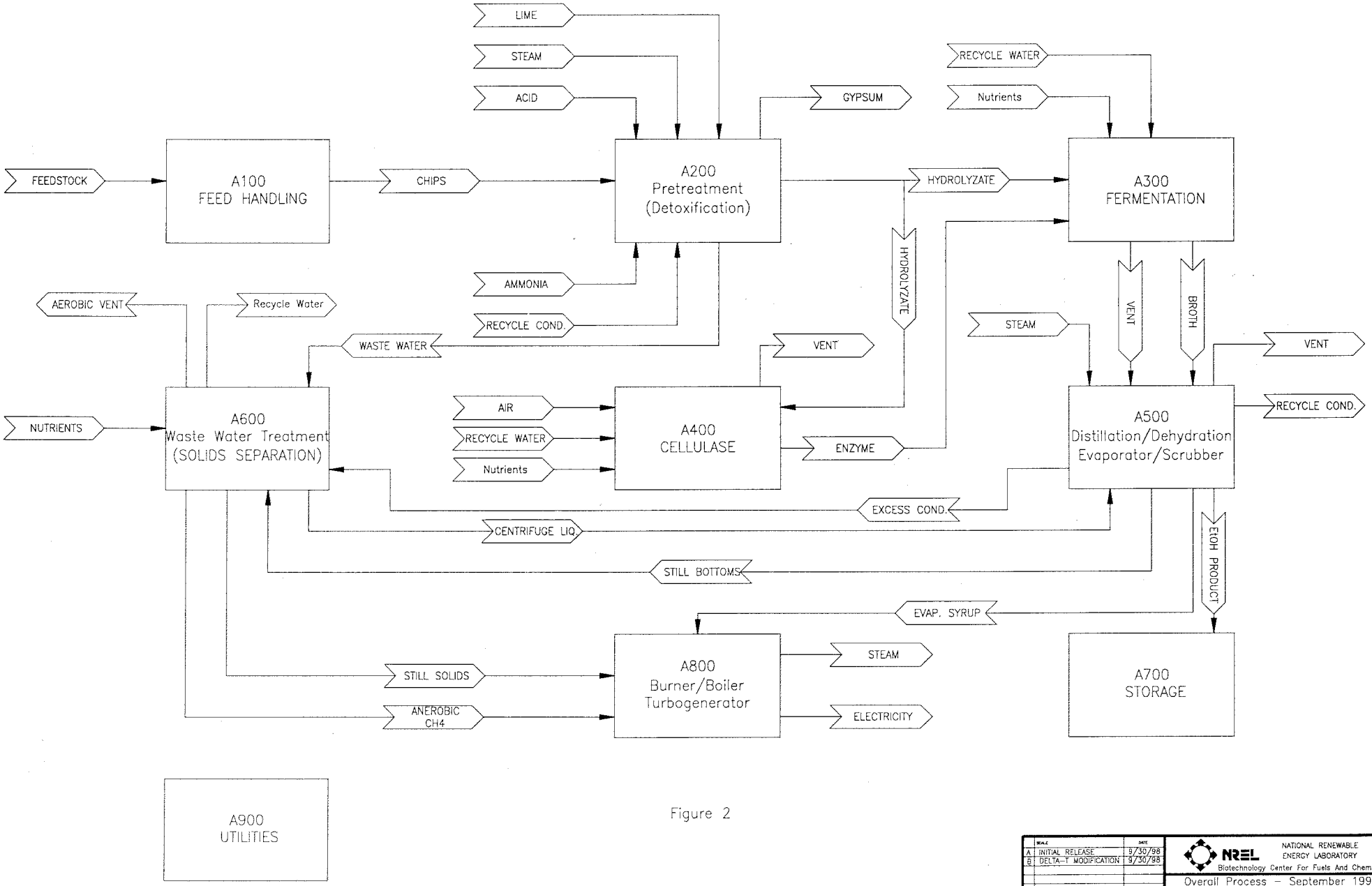

Figure 2

	SCALE	DATE
A	INITIAL RELEASE	9/30/98
B	DELTA-T MODIFICATION	9/30/98

NREL NATIONAL RENEWABLE ENERGY LABORATORY
Biotechnology Center For Fuels And Chemicals

Overall Process – September 1998
Cellulosic Biomass to Ethanol

PFD-P100-A000 B

I.3 Plant Size

As can be seen from the scaling equation presented earlier, which shows that equipment costs do not linearly increase with equipment size, plant size is important in figuring the overall cost of making a product. Generally, equipment costs scale with an exponent of about 0.7. An exponent of 1 would translate to linear scaling. Anything less means that the capital cost per unit size decreases as the equipment becomes larger. This diminishes when the equipment is as large as possible and multiple pieces of equipment become necessary.

In establishing the appropriate size of an "nth" (the "nth" plant implies that many similar plants have already been built, thus minimizing design risk and uncertainty) ethanol plant, we must consider the effects of a number of tradeoffs. Savings resulting from economies of scale are offset by increased costs for feedstock collection. Put quite simply, the more feedstock a plant demands, the farther out it must go to get it. Collection distance for a plant is highly site specific. But a simple analysis can be done to determine if an assumption for the base case plant size is reasonable.

Such analysis for two of the key feedstocks currently targeted by the Biofuels Program—switchgrass and corn stover—has been completed. Switchgrass is a dedicated energy crop that could be in use as early as 2005, perhaps as a relatively small fraction of the total biomass used in an ethanol plant. Corn stover is a feedstock material available in high volume as a by-product from today's corn farmers.

I.3.1 Switchgrass

Oak Ridge National Laboratory has published a spreadsheet database that summarizes the cost, yield, and available acreage for producing energy crops. This database, known as ORECCL,[8] provides county-level data on land availability and rents, energy crop yields, and production costs. We used this database to determine state-averaged estimates for switchgrass yields (in MT [metric ton]/acre/year), and estimated farm-gate cost of the switchgrass (in $/MT). Our analysis of the database identified Alabama as the state with the lowest average cost for producing switchgrass. In Alabama, switchgrass could be produced for costs ranging from $28 to $41/MT ($25 to $37/ST [short ton]), and averaging $31/MT ($28/ST) (in 1998 $). The average yield of switchgrass in Alabama is estimated to be 6.15 MT/acre/year (6.7 ST/acre/year).

To get a sense for the size of radius around the plant that must be included for feedstock collection, we made two more critical assumptions:

- Only 10% of the suitable acreage around the plant is actually used for switchgrass production
- Seventy-five percent of the land surrounding the plant is actual farmland.

The estimate of 10% dedication of acreage to switchgrass is conservative. An analysis of the cost data in the ORECCL database suggests that 30% of the suitable acreage in Alabama could produce switchgrass at a cost of $30 or less per MT ($27 or less per ST). This cost estimate takes into account the effects of competition for land use in an indirect way by assigning land rent values on a county-by-county basis. Thus, for this analysis we assumed that only one-third of the land available at a switchgrass price of $30/MT ($27/ST) was actually assigned to switchgrass production. The second assumption said that 25% of the land around the plant was used for infrastructure (roads, buildings, and other rights of way). Using these assumptions, in conjunction with the average yield estimate for switchgrass, we calculated the radius of collection as a function of plant size (see Figure 3).

These calculations show that a 2,000 MT/day (2205 ST/day) plant would require a collection radius of 64 km (40 miles) to meet its feedstock needs. Doubling the size of the plant to 4,000 MT per day (4409 ST/ day) would extend the collection radius to around 92 km (57 miles). (Note that the collection radius increased in proportion to the square root of the plant's feedstock demand rate.)

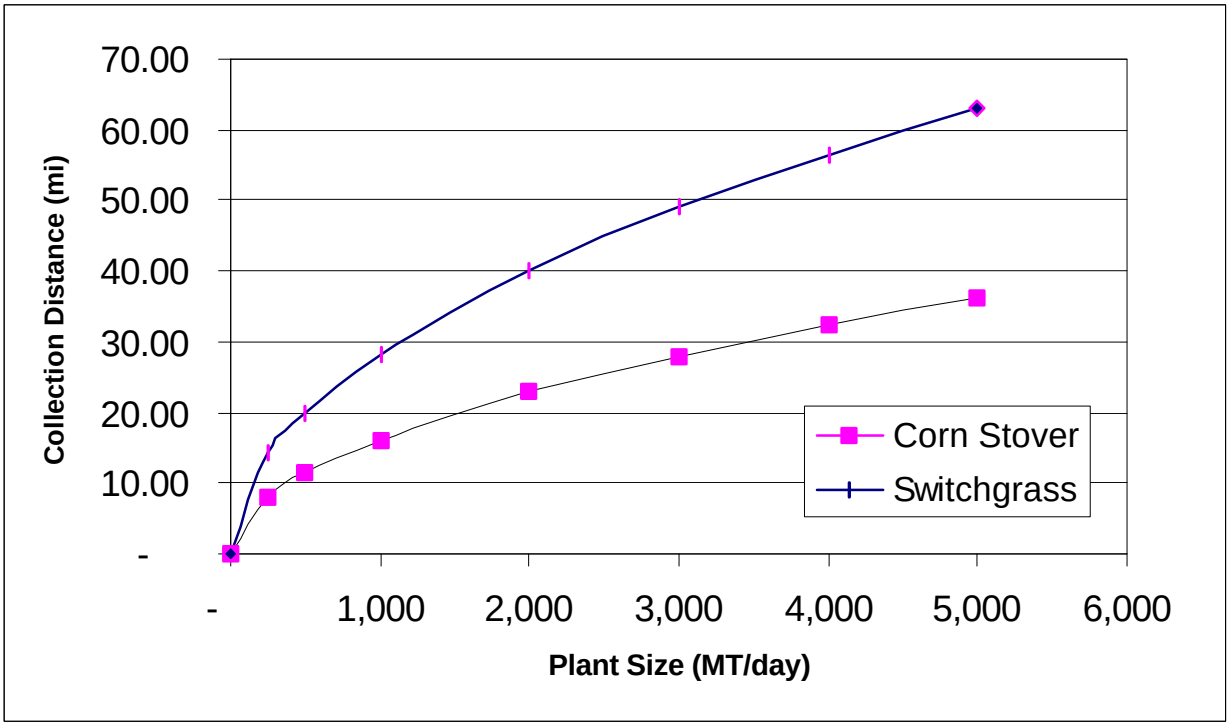

Figure 3. Collection Distance as a Function of Plant Size for Switchgrass and Corn Stover

I.3.2 Corn Stover

A similar analysis can be done for corn stover collection, using data from an ongoing corn stover collection project in Harlan, Iowa. In the second year of this demonstration project, researchers reported collecting 50,000 MT (55,100 ST) of corn stover from more than 30,000 acres of land.[9] This amounts to around 1.67 MT (1.84 ST) of corn stover per acre. We assumed that 50% of the land around a Midwest facility would be dedicated to corn, and that the remaining 50% would be used for soybean production. This reflects the common practice of corn and soybean crop rotation. As with the switchgrass analysis, we assumed that 75% of the land around the plant was available for planting. Figure 3 shows that, under these assumptions, a 2,000 MT/day (2205 ST/day) corn stover to ethanol facility would have to collect its feedstock over 37 km (23-mile) radius from the plant. Doubling the plant size increases that radius by only 16 km (10 mi).

I.3.3 The Effect of Distance on Collection Costs

Collecting biomass for the plant has two main costs:

- The cost of harvesting and baling
- The cost of transportation from the farm to the plant gate.

These costs must be added to the farmer's asking price for the feedstock. Costs for baling and transport of corn stover, based on the commercial demonstrations conducted in Harlan, Iowa, have recently been reported.[9] Only transportation costs are directly affected by the size of the plant.[10] These costs are shown in Figure 4 as a function of distance from the plant. Figure 5 combines the results from Figures 3 and 4 to show the effect of increased plant size on the incremental cost of feedstocks.

If plant size doubled from 1,000 MT (1102 ST) per day to 2,000 MT (2205 ST) per day, feedstock costs would rise by $2.11/MT ($1.91/ST) of switchgrass and only $1.21/MT ($1.10/ST) of corn stover. Doubling again from 2,000 to 4,000 MT (2205 to 4409 ST) per day would result in added costs of $1.63/MT ($1.48/ST) of switchgrass and $0.93/MT ($0.84/ST) of corn stover.

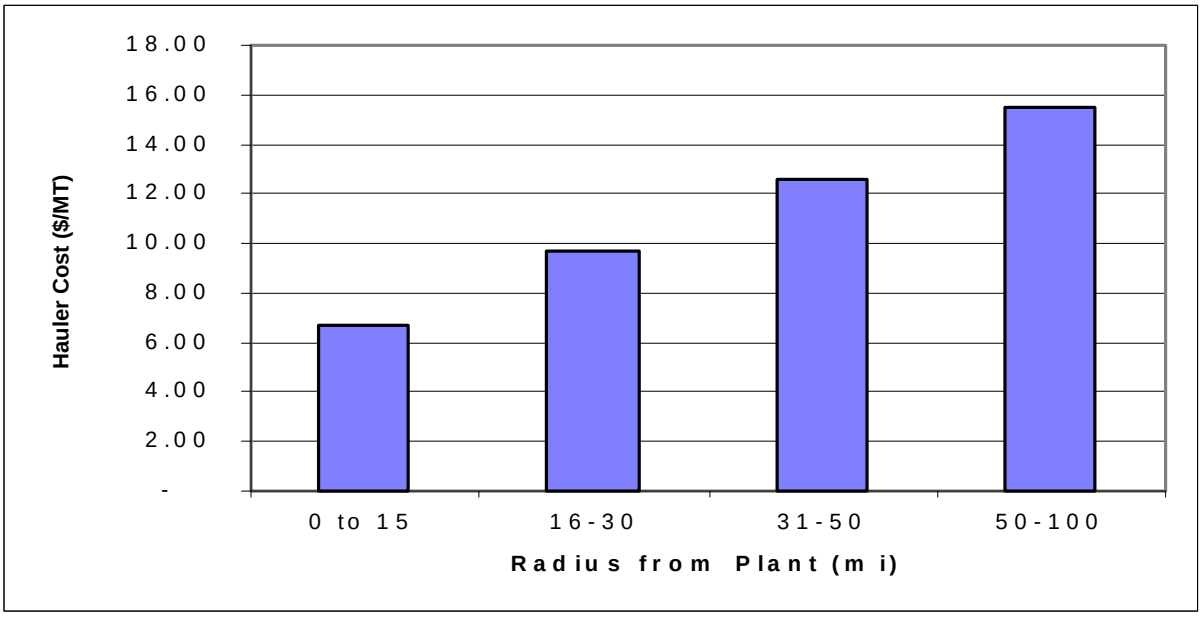

Figure 4. Hauling Charges for Corn Stover as a Function of Distance

I.3.4 Choice of Plant Size

The analyses presented in the previous two sections were not intended to definitively assess feedstock collection cost issues. We look to experts at ORNL and elsewhere for more complete evaluation of the logistics and costs of producing, harvesting, collecting, and transporting feedstocks. However, these analyses did give us a relative context for choosing plant size. Previous NREL process economics assumed a plant size of around 2,000 MT/day (2205 ST/day) of biomass. Recent concerns that this plant size is too large motivated us to reconsider this key assumption in our process analysis. The results of this simplified analysis suggested that the difference in feedstock costs between our 2,000 MT/day (2205 ST/day) plant and a plant twice this size is reasonable. To put this in context, consider that, for every dollar in added feedstock cost, the net effect on the cost of ethanol produced is on the order of 1 to 2 cents per gallon. We expect that the savings that result from the concomitant increased economy of scale may be an order of magnitude higher. We need to confirm these savings more rigorously. For corn stover collection, plants as large as 5,000 MT/day (5512 ST/day) could meet their demand for biomass within a

40-mile radius. Switchgrass plants may be reaching out as far as 97 to 113 km (60 to 70 miles). These distances seem reasonable. For now, we are comfortable with cost projections based on a plant designed to process 2,000 MT/day (2205 ST/day). In fact, considering even larger plant sizes in the future may prove worthwhile.

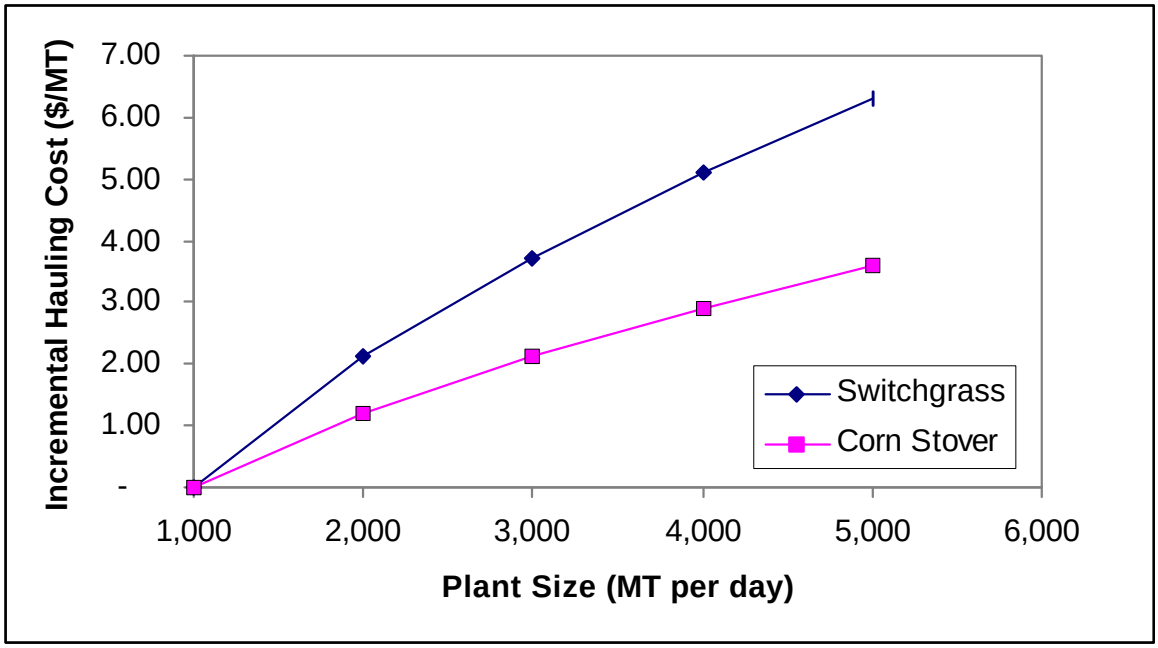

Figure 5. The Effect of Plant Size on Incremental Feedstock Cost

I.3.5 Other Considerations

It is important to keep in mind the purpose of our process analysis studies: to direct research and provide information on the cost of processing biomass to ethanol. Our concerns center on the impact of specific types of technology changes. Because of that focus, we tend not to dwell on external economic considerations such as feedstock costs. For example, our process economics assume a feedstock cost of $27.50/ MT ($25/ST). As the previous analysis suggests, feedstock costs are likely to be higher than that. We treat these types of considerations by using sensitivity analyses to set a range on the cost estimates. For feedstock, we look at the effect of costs ranging from as low as $16.50/MT ($15/ST) to as high as $44.10/MT ($40/ST).

In addition, the perspective of our studies is that of "nth" plants using high-volume biomass sources. We assume that these plants are located in the best locations for access to these feedstocks. Switchgrass and corn stover are good examples of these kinds of feedstocks. In the near term, many of the pioneer plants will rely on niche feedstocks, which are often spread out over much larger distances. Such plants may indeed be much smaller in size than our base case design assumes.

I.4 Feedstock and its Composition

The feedstock chosen for the process design has some impact on the overall analysis. However, it is important to use the feedstock for which most of the experimental work has been conducted in the analysis. In this case NREL has been using hardwood, typically yellow poplar, as its typical feedstock for research for the last several years. Therefore, we used yellow poplar hardwood as the feedstock for this process. Generally, the type of feedstock will have the biggest effect on the feedstock-handling portion of the process. Additionally, the feedstock composition certainly will have an impact on pretreatment yields and on how much ethanol is produced, as well as an effect on the efficiency of the fermenting organism (which depends on the presence or absence of toxic compounds).

The feedstock composition used for this analysis was typical yellow poplar.[11] A feedstock analysis was converted to components that are used in the ASPEN model and normalized to 100%. In general, the component analysis of carbohydrates was used directly.

Table 1 gives the feedstock composition used in this analysis.

Table 1: Feedstock Composition[11]

Component	% Dry Basis
Cellulose	42.67
Xylan	19.05
Arabinan	0.79
Mannan	3.93
Galactan	0.24
Acetate*	4.64
Lignin	27.68
Ash	1.00
Moisture	47.90

*Acetate is the acetate groups present in the hemicellulose polymer. They are generally converted to acetic acid in the prehydrolysis reactor.

II. Process Design and Cost Estimating

The following sections describe in detail the process design and cost estimation for a cellulose-to-biomass process based on core technology developed by NREL. Generally the data used for design have been demonstrated in the laboratory or pilot plant. In some cases, we extrapolated current experimental results to what should be possible to obtain in the next 1 or 2 years of continued research (these extrapolations are noted in the text). More details of the design and cost estimation can be found in the NREL Process Engineering equipment database, which contains all engineering calculations and results from any vendors or costing programs. The database is described and partially summarized in Appendix A.

The cost estimate is based on the assumption that this is the "nth" plant, meaning that several plants using this same technology will have already been built and are operating. This means that additional costs for risk financing, longer start-ups, and other costs associated with first-of-a-kind plants are not included.

The on-line time is 96%, which allows for a little more than 2 weeks of downtime. Delta-T considered this quite reasonable for the "nth" operating plant.

In Section IV, we consider futuristic cases where the results of continued research on feedstocks, reactors, fermenting organisms, cellulase production, and effectiveness are compared to this "base case."

II.1 Feedstock Storage and Handling – Area 100 (PFD-P100-A101)

II.1.1 Overview

The plant receives wood chips by truck only. As these trucks are received, they are weighed and dumped. Upon dumping, the chips are conveyed to a storage pile. From the storage pile, bulldozers rearrange the pile and keep the reclaim hoppers filled. From the storage pile, the chips are transferred under a magnetic separator to remove metallic impurities and then moved on to chip washers. The chip washers remove other contaminants, such as dirt.

After washing, the chips are screened and the very large material is sent off to waste disposal. A second screener separates by material thickness. We expect that most material will pass through this screen and on to the pretreatment reactor system. The larger chips are sent to a disk refiner for size reduction and then on to the pretreatment area.

II.1.2 Design Basis

The continuous-process, wet-chip-feed requirement is 159,948 kg/hr (352,625 lb/hr, 160 MT/hr, 176 ST/hr). Limiting trucks to approximately 27 MT (30 ST) for road considerations (this is less than their volumetric maximum capacity of 43 MT [47 ST]), it is necessary to unload 136 trucks per day, or 6 trucks every hour, 24 hours per day, 7 days per week. To allow for downtime, we assume that all unloading/dumping and transfer occurs in an 18-hr day and that one truck is unloaded every 20 minutes on each scale, requiring three operating dumps. In addition, one installed spare will be included because of the need to not delay the trucks' unloading.

Truck dumping will not be around the clock, so the size transfer conveyors to the chip pile are designed for 213 MT/hr (235 ST/hr) of wet material. The remainder of the process—wood chip handling,

reclaiming, washing, sizing, and feed to hydrolysis—is designed for the average capacity of 160 MT/hr (176 ST/hr) of wet material.

Vehicles will be weighed loaded and unloaded on a combination platform scale and hydraulic dumper (M-101), which can lift both truck and trailer to dump the load into a receiving hopper (T-101) that has a capacity of 176 m^3 (6,200 ft^3) or about three trucks. Each hopper is fitted with a vibrating feeder (C-101) that meters the chips onto a belt conveyor (C-102) at 109 MT/hr (120 ST/hr), unloading the 27 MT (30 ST) truck in 15 minutes. The belt conveyor discharges into a stacking conveyor (C-103) that delivers the chips to the storage pile at a rate of 213 MT/hr (235 ST/hr). Bulldozers (M-102) move the chips to form a 12 m (40-ft) high pile with an area of approximately 2090 m^2 (22,500 ft^2) providing 7 days of storage. Two bulldozers are provided to allow for peak delivery, proper pile rotation, and maintenance. We anticipate that two operators will be required at all times in this area.

The bulldozers are used to push chips into two reclaim hoppers (T-102) with a capacity of 176 m^3 (6,200 ft^3) or a combined total of about 2 hr of surge time. Each hopper is fitted with a vibrating feeder (C-104) that meters the chips onto a transfer belt conveyor (C-105). Both have a capacity of 160 MT/hr (176 ST/hr). The belt conveyor is fitted with a magnet (S-101) to remove tramp metal and with a tripper assembly to facilitate feeding to each of four chip washer surge bins (T-103, 249 m^3 (8,800 ft^3) each), with a total surge capacity of 7 hr. Each bin is fitted with a vibrating feeder (C-106) and feeds each of four chip washing systems (W-101) at 45 MT/hr (50 ST/hr) (combined total of 182,000 kg/hr [401,000 lb/hr]). Four chip washer systems are used because each train consists of the largest commercially available components, (19,000 kg/hr (41,900 lb/hr), dry). Washing of the chips aids in removing inert materials and water-soluble constituents in the raw chips, which might be detrimental to the process.

Chips from two washer units are collected on a common drag-chain conveyor (C-107) (two total for four washers), with a combined capacity of 181 MT/hr (200 ST/hr). The chips are then passed to a scalper screen (S-102) to remove very large material and then onto to a chip thickness sizing screen (S-103). We assume that approximately 20% of the incoming material will be oversized and will require processing through a single disc refiner system (M-104). The disc refiner reduces oversized material to less than 19 mm (¾ in.), suitable for the pretreatment reactors. A drag-chain conveyor (C-108) transfers processed material from the sizing screen and refiner to the pre-steaming hoppers of the pretreatment units (M-202) at 160 MT/hr (176 ST/hr).

II.1.3 Cost Estimation

Most of the large equipment in this section—the hydraulic dump, all conveyors, screeners, washer system and disk refiner—was costed using vendor quotations. The other equipment (feeders and storage bins) was costed using the standard process cost estimation manual by Richardson[12].

II.2 Pretreatment and Hydrolyzate Conditioning – Area 200 (PFD-P100-A201-3)

II.2.1 Overview

This process area converts, by hydrolysis reactions, most of the hemicellulose portion of the feedstock to soluble sugars, primarily xylose, mannose, arabinose, and galactose. A small portion of the cellulose is converted to glucose. This conversion is accomplished using dilute sulfuric acid and high temperature. These conditions also solubilize some of the lignin in the feedstock and “exposes” the cellulose for subsequent enzymatic hydrolysis. In addition, acetic acid is liberated from the hemicellulose hydrolysis.

Degradation products of pentose sugars, primarily furfural, and hexose sugars, primarily hydroxymethyl furfural (HMF), are also formed.

Following the pretreatment reactor, the hydrolyzate liquid and solids are flash cooled, which vaporizes a large amount of water, much of the furfural and HMF, and a portion of the acetic acid (see Figure 6). Removal of these heterocyclic aldehydes is beneficial, as they can be detrimental to downstream fermentation.

In addition to flash removal of aldehydes, the acetic acid must be removed and other conditioning must be performed before fermentation.[13] The acetic acid is removed from the liquid portion of the hydrolyzate using continuous ion exchange. After ion exchange, the liquid is "overlimed." This process, as we currently envision it, requires that the liquid hydrolyzate's pH be lowered (by adding sulfuric acid) after ion exchange, then raised to pH 10 (by adding lime) and held for a period of time. Neutralization and precipitation of gypsum follow the overliming step. The gypsum is filtered out and the hydrolyzate is mixed with the solids (cellulose) and dilution water before being sent to fermentation (Area 300). What happens in the overliming process is not completely understood.

Research is currently under way to determine if the overliming process is removing, adding, or changing the form of a component, or a combination of all of these.[14] A better understanding of the overliming process may allow it to be replaced with an operation that does not require lime addition and gypsum removal.

II.2.2 Design Basis Description

The milled wood chips are first steamed with low pressure steam in a feed bin (M-202) to about 100°C (see PFD-P100-A201). This steaming removes non-condensables and allows about one-third of the reactor heat load to be performed with low pressure steam. After steaming, acid is added in the impregnator section of M-202. Concentrated sulfuric acid is diluted with evaporator condensate (see evaporation section) and added to the reactor so that the total mixture constitutes 31% insoluble solids, before the steam addition. Concentrated acid is added until the mixture (the total water, including steam and acid) in the reactor is 0.5% sulfuric acid. The reactor is brought up to temperature by direct injection of 13 atm (191 psia) (192°C saturation temperature and 76°C superheat) turbine extraction steam. Table 2 summarizes the conditions in the pretreatment reactor.

Table 2: Pretreatment Reactor Conditions[15]

Acid Concentration	0.5%
Residence Time	10 minutes
Temperature	190°C
Solids in the Reactor	22%

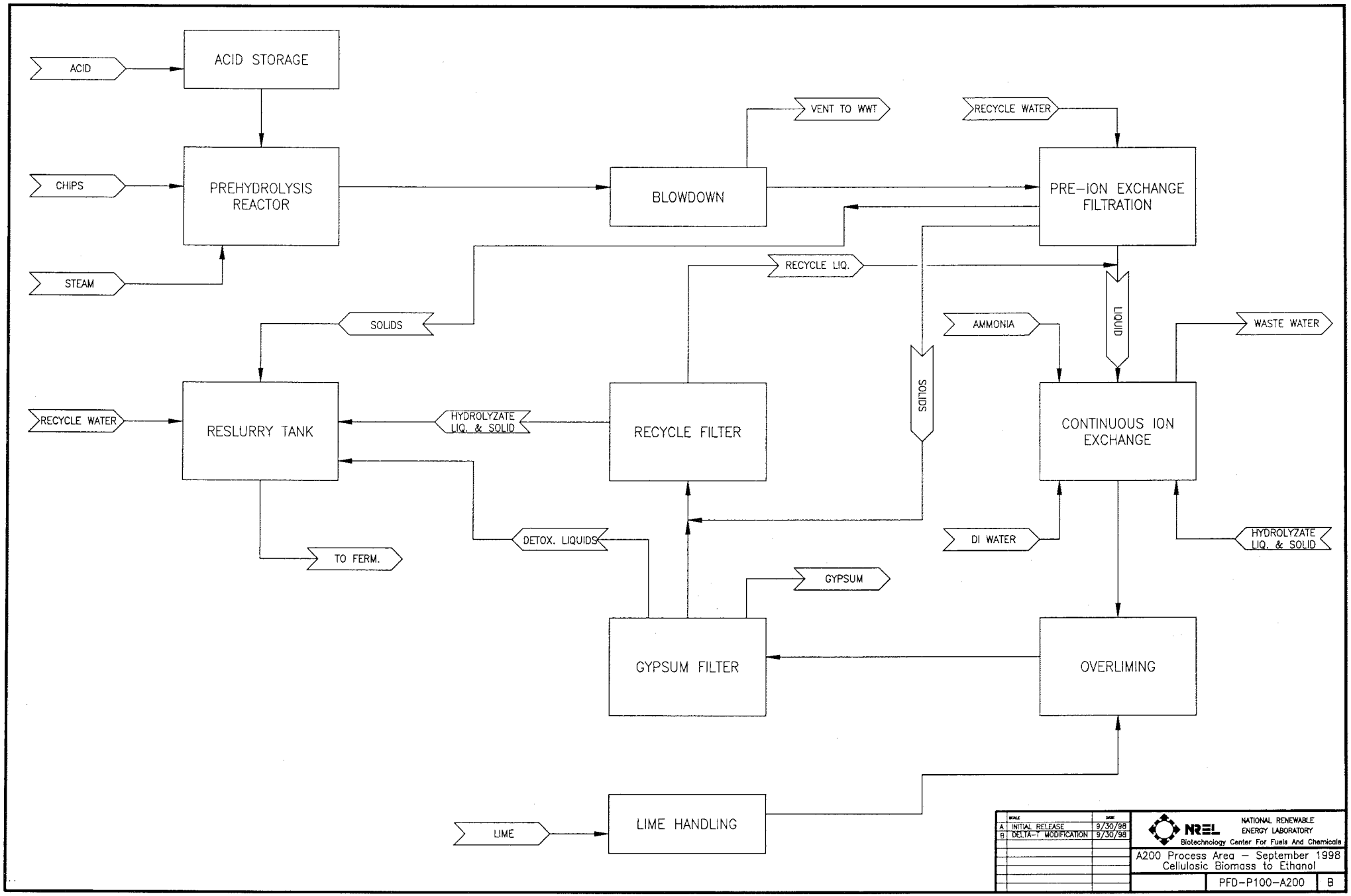
ACID
ACID STORAGE
CHIPS
PREHYDROLYSIS REACTOR
STEAM
VENT TO WWT
BLOWDOWN
RECYCLE WATER
PRE-ION EXCHANGE FILTRATION
RECYCLE LIQ.
LIQUID
SOLIDS
AMMONIA
WASTE WATER
RECYCLE WATER
RESLURRY TANK
HYDROLYZATE LIQ. & SOLID
RECYCLE FILTER
SOLIDS
CONTINUOUS ION EXCHANGE
DETOX. LIQUIDS
TO FERM.
DI WATER
HYDROLYZATE LIQ. & SOLID
GYPSUM
GYPSUM FILTER
OVERLIMING
LIME
LIME HANDLING
A INITIAL RELEASE 9/30/98
B DELTA-T MODIFICATION 9/30/98
NREL
NATIONAL RENEWABLE ENERGY LABORATORY
Biotechnology Center For Fuels And Chemicals
A200 Process Area – September 1998
Cellulosic Biomass to Ethanol
PFD-P100-A200
B

Table 3 summarizes the resulting reactions and the conversions that take place in the pretreatment-hydrolyzer. These reactions and conversions were taken from experiments conducted on yellow poplar hardwood in the NREL process development unit (PDU) Sunds reactor[16] with adjustments made for expected near-term improvements[17]. We assumed that the results of the Sunds pilot unit would scale directly to the production-scale reactor. Also, we did not account for heat losses from the reactor in the energy balance calculations.

Table 3: Pretreatment Hydrolyzer Reactions and Conversions[17]

Reaction						Conversion	
$(Cellulose)_n$	+	n H_2O	$\rightarrow$	n Glucose		Cellulose	0.065
$(Cellulose)_n$	+	m H_2O	$\rightarrow$	m Glucose Olig		Cellulose	0.007
$(Cellulose)_n$	+	½n H_2O	$\rightarrow$	½n Cellobiose		Cellulose	0.007
$(Xylan)_n$	+	n H_2O	$\rightarrow$	n Xylose		Xylan	0.75
$(Xylan)_n$	+	m H_2O	$\rightarrow$	m Xylose Olig		Xylan	0.05
$(Xylan)_n$			$\rightarrow$	n Furfural	+ 2n H_2O	Xylan	0.1
$(Xylan)_n$	+	n H_2O	$\rightarrow$	$(Tar)_n$		Xylan	0.05
$(Mannan)_n$	+	n H_2O	$\rightarrow$	n Mannose		Mannan	0.75
$(Mannan)_n$	+	m H_2O	$\rightarrow$	m Mannose Olig		Mannan	0.05
$(Mannan)_n$			$\rightarrow$	n HMF	+ 2n H_2O	Mannan	0.15
$(Galactan)_n$	+	n H_2O	$\rightarrow$	n Galactose		Galactan	0.75
$(Galactan)_n$	+	m H_2O	$\rightarrow$	m Galactose Olig		Galactan	0.05
$(Galactan)_n$			$\rightarrow$	n HMF	+ 2n H_2O	Galactan	0.15
$(Arabinan)_n$	+	n H_2O	$\rightarrow$	n Arabinose		Arabinan	0.75
$(Arabinan)_n$	+	m H_2O	$\rightarrow$	m Arabinose Olig		Arabinan	0.05
$(Arabinan)_n$			$\rightarrow$	Furfural	+ 2n H_2O	Arabinan	0.1
$(Arabinan)_n$	+	n H_2O	$\rightarrow$	$(Tar)_n$		Arabinan	0.05
Acetate			$\rightarrow$	Acetic Acid		Acetate	1.0
n Furfural	+	3n H_2O	$\rightarrow$	$(Tar)_n$		Furfural	1.0
n HMF	+	3n H_2O	$\rightarrow$	1.2 $(Tar)_n$		HMF	1.0

Xylose olig, mannose olig, galactose olig, and arabinose olig are soluble oligomers of their respective carbohydrate polymers.
Tar is an unknown final decomposition product of the carbohydrate polymers.

Note: These reactions are modeled as occurring simultaneously. Therefore, products of one reaction, e.g., furfural, are not considered a reactant in another reaction. Degradation of xylan all the way to tar is accounted for as a reaction of xylan to tar. Degradation of furfural considers the furfural entering the reactor in the recycle water.

The pretreatment reactor (M-202) operates at 12.2 atm (179 psia) pressure and 190°C. The exiting material is flash cooled to 1 atm (14.7 psia) in T-203. The flash vapor is modeled with the Hayden and O'Connell[18] equation of state to specifically model the vaporization of acetic acid. Acetic acid creates dimers in the vapor phase and this equation of state properly accounts for that. If the vapor phase dimerization of acetic acid is not accounted for, the loss of acetic acid in the vapor will be over estimated. In this flash, 6.5% of the acetic acid and 61% of the furfural and HMF are removed in the flash operation.

The flash vapor, about 45,000 kg/hr (99,200 lb/hr) of essentially 100°C steam, is used to preheat the beer column feed in H-201. During this exchange, the beer column feed is heated to 95°C and most of the

flash vapor from T-203 is condensed. The condensed flash vapor is sent to wastewater treatment (Area 600).

After a residence time of 15 minutes in the flash tank, the hydrolyzate slurry with 26% insoluble solids is conveyed to a washing belt filter press (S-202) for separation of the solids and the liquids (see PFD-P100-202). The purpose of separating the liquids from the solids is to facilitate conditioning of the liquid portion to remove toxicity to the downstream fermentation.

Even a belt filter press will leave the solids portion with about 40% insoluble solids, removing 44% of the liquid. This leaves 56% of the toxic materials in the liquid portion of untreated solids. One way to remove more of the toxic materials from the solids is to wash with the water that must be added before fermentation. This will reduce the toxins left in liquid portion of the slurry to 30%, but will affect the size of the liquid solid separator and the subsequent conditioning equipment. The other alternative is to remix the liquids and solids after conditioning, followed by another separation and recycling part of the liquid. This recycle stream needs to be quite large to accomplish the same acetic acid removal as this pre-ion exchange washing and requires a second liquid solid separator. In addition, by adding the fermentation dilution water before the ion exchange, there is an opportunity to remove acetic acid from this recycle water, so that it does not build up. Rearranging the original pilot plant flows minimizes the cost impact on ion exchange. The stream now is more dilute, but higher in flow.

NREL's understanding of the liquid solid separation is limited. Therefore, for this case we assumed that all the dilution water is used in a washing filter and that it is only a "single" stage of washing (S-202). Ideally, less wash water would probably be used and the operation may be more efficient (more removal of acetic acid into the liquid). If less than all of the dilution water is used, the ion exchange will be somewhat smaller and the remainder of the dilution water will be added just before fermentation. After filtering, the filtrate is cooled to 40°C in H-200 using cooling water. This temperature is compatible with the next unit operation, ion exchange.

The ion exchange removal of acetic acid is accomplished in a continuous ion exchange unit known as an ISEP (S-221), from Advanced Separations Technology, Inc. (AST), in Lakeland, Florida. The separation used in this design employs Amberlyst A20 weak base resin from Rohm-Haas, regenerated with ammonia. Approximately 88% of the acetic acid and 100% of the sulfuric acid is removed. The sugar is completely (100%) recovered and diluted with about 8% water. This dilution water is subtracted from the total that needs to be added for fermentation, so ion exchange essentially adds no additional water. The amount of ammonia used is 1.1 normal per normal of ions removed or 10% above the minimum. These conditions were determined in a pilot study conducted on an AST L100C pilot unit with 20-33 mm (1.3 in.) diameter by 1 m (3.3 ft) long columns.[19] The scale-up is accomplished by keeping the liquid velocity in the columns the same as that used in the pilot plant. The eluant (NH_3) and water usage is in the same ratio to the feed as in the pilot plant.

After the ion exchange removal of acetic acid, the material is overlimed (see PFD-P100-A203). This is accomplished by reacidifying the liquid hydrolyzate to pH 2 by addition of sulfuric acid using an in-line mixer (A-235). Lime is then added in tank T-209 to raise the pH to 10 and heated by direct steam injection to 50°C. The residence time in T-209 is 1 hr to allow for the overliming "reactions" to occur.[20] Based on the experience of Delta-T, the agitation for this application is assumed to be 98.5 W/m^3 (0.5 hp/1000 gal). The liquid is then adjusted to the fermentation pH of 4.5 in tank T-224 and held for 4 hr. This long residence time allows the resulting gypsum crystals to form in a size that can be readily separated by hydrocyclone and rotary drum filtration in series.[21] Agitation in T-224 was taken as 98.5

w/m^3 (0.5 hp/1000 gal), again based on Delta-T's experience. The filtration is assumed to remove 99.5% of the precipitated gypsum and the solids are assumed to contain 20% liquid.[22] At 80% solids, gypsum can be handled as a dry solid. This approach was recommended by vendors and is typical of dewatering equipment used in the utility flue gas desulfurization industry to achieve high solids concentrations commercially.

After the gypsum is filtered, the conditioned hydrolyzate liquid is recombined with hydrolyzate solids (which were separated in S-202) in tank T-232 (see PFD-P100-A201). The residence time in this tank is minimal, 15 minutes, just long enough to afford good mixing. The agitation for this application is assumed to be 394 W/m^3 (2 hp/1000 gal) based on the experience of Delta-T. The resulting slurry, now conditioned, pH-adjusted, and properly diluted, is pumped to fermentation (Area 300).

II.2.3 Cost Estimation

All pumps, tanks, screw conveyors, and agitators for this section were estimated using the ICARUS Process Evaluator.[23] The material of construction for all equipment except the pretreatment reactor (M-202), continuous ion exchange (S-221) and flash tank (T-203) is 304SS, based on the experience of Delta-T. The material of construction of the flash tank is Carpenter 20 because additional acid resistance at temperatures higher than 100°C is necessary. Generally the ion exchange occurs at low temperature (about 40°C) and the vessels are assumed to be rubber lined steel. The ISEP valve is polypropylene and 304SS, consistent with the material of construction use for low temperature equipment in this section.

We obtained the cost estimate of the ion exchange from the vendor, AST. Prices on two different size units were obtained so that an accurate scaling factor could be derived.

Sunds Defribractor, Inc. gave us quotes on the pretreatment reactor (M-202) and supporting equipment. We obtained prices on various temperatures and pressures. The materials of construction are assumed to be Hastelloy C-2000, based on work done at the Tennessee Valley Authority (TVA)[24] (see Table 4). The quote from Sunds included a price for a stainless steel unit to be used at low temperature and on Hastelloy C-2000 to be used at high temperatures. The difference between these two was a factor of 3 to 4. In further discussions with Sunds, we determined that the company had never built a large system of this type out of Hastelloy C-2000, and that this price included a contingency, along with development costs to build this "first-of-a kind-reactor".[25] A first design is not the appropriate price for this estimate, which must consider the reactor to be the "nth" built and must assume that the manufacturer is comfortable with the design and fabrication of the unit. We feel that the Sunds quote for the lower temperature stainless steel reactor meets the criteria of an "nth" plant design and needs only to be adjusted for different conditions and materials of construction. Therefore, Delta-T used the cost estimate for a low temperature stainless steel unit and adjusted the cost to Hastelloy C-2000, accounting for higher pressure, as well as some increased engineering and fabrication costs (Hastelloy C-2000 is more difficult to fabricate than stainless steel). This analysis indicates that the cost of the stainless steel reactor will escalate by about 50%. This is reasonable considering that not all of the material is Hastelloy C-2000 and that much of the equipment cost is in the mechanical complexity of the unit, which is unchanged by moving from stainless steel to Hastelloy C-2000.

Table 4: Coupon Corrosion Data on Several Metals[24]

	Corrosion, mm/yr (mils/yr)		
Temperature, C	**Carpenter 20**	**Hastelloy B**	**Zirconium**
100	0.013 (0.5)		
180	5.9 (233)	0.5 (20)	< 0.007 (< 0.3)
200	23.4 (923)	0.8 (32)	< 0.007 (< 0.3)
Note: 2% (wt/wt) Sulfuric Acid Solution			

The cost estimate for the liquid solid separators, S-202 and S-222 are based on vendor quotations from Komline Sanderson.

II.3 Simultaneous Saccharification and Co-Fermentation (SSCF)–Area 300 (PFD-P100-A301-2)

II.3.1 Overview

Two different operations are performed in this process area—saccharification of the remaining cellulose to glucose using cellulase enzymes, and fermentation of the resulting glucose and other sugars (from the dilute acid pretreatment of hemicellulose, Area 200) to ethanol. For fermentation, the recombinant *Z. mobilis* bacterium[26] is used as the ethanologen. This form of *Z. mobilis* will ferment glucose and xylose to ethanol. It is assumed that no other sugars are fermented in the base case model. Futuristic cases or those using other ethanologens may convert other sugars.

Hydrolysis or saccharification occurs in the main fermentation vessels. Cellulase enzymes used in the saccharification are produced in Area 400 of the process and mixed with the hydrolysis raw material and nutrients directly in the fermenter.

The ethanologen must be "grown" in a seed fermentation train of vessels in this area. Detoxified hydrolyzate and nutrients are combined with an initial seed inoculum (grown in the laboratory) in a very small vessel. The result of each seed batch is used as the inoculum for the next size seed increment. This series of scale-ups is continued until the last step is large enough to support the production fermentation.

Finally the seed inoculum, cellulase enzyme, nutrients, and diluted, cooled, detoxified hydrolyzate are continuously added to the several continuous SSCF production lines. The number of fermenter tanks in a train or line will probably be about five or six, 1-million gallon fermenters, in three or four lines. The resulting ethanol broth is collected in a beer well (storage tank) to level out any surges or upsets before it is pumped to distillation.

II.3.2 Design Basis Description

Detoxified and diluted hydrolyzate is split to cellulase fermentations, *Z. mobilis* seed production, and SSCF fermenters. The hydrolyzate fed to the SSCF is about 20% total solids[27] (soluble and insoluble solids) including the dilution that will occur when the cellulase stream is mixed in. The actual hydrolyzate feed stream will be closer to 22% total solids. The portion of hydrolyzate split off to cellulase production is a function of the cellulase yield on the xylose and cellulose present and the required loading of enzyme in the SSCF.

The required inoculum volume has been experimentally determined to be 10%,[28] in the seed train and in the production train. The seed train is operated in a batch mode (see PFD-P100-A301). The batch time for each step is 24 hr.[29] Delta-T decided two trains would be optimal using an assumed turn-around time for each seed fermenter of 12 hr (see Figure 7). Using these conditions, a train will complete each 12 hr, skip 12 hr and complete after 24 hr. Based on the production flow of about 8,700 m^3/day (2.3 million gallons/day), the seed volume to be produced each day is 870 m^3 (230,000 gal), or 435 m^3 (115,000 gal) every 12 hr. Referring to Figure 7, it is clear that each batch must be 655 m^3 (173,000 gal) to satisfy the 12-hr period that is skipped. If three trains were used, the maximum volume would be only 435 m^3 (115,000 gal), but because there would be three trains it would be more costly. Considering a 90% working volume, the maximum seed fermenter is 727 m^3 (192,000 gal). Scaling down by a factor of 10 for each smaller stage results in four additional seed fermenters of 72.7, 7.6, 0.8, and 0.08 m^3 (19,200, 2000, 200, and 20 gallons). The total amount of hydrolyzate split off to seed production is 10% (same as the inoculum level). Table 5 summarizes the seed train design specifications.

Figure 7. SSCF Seed Batch Cycles

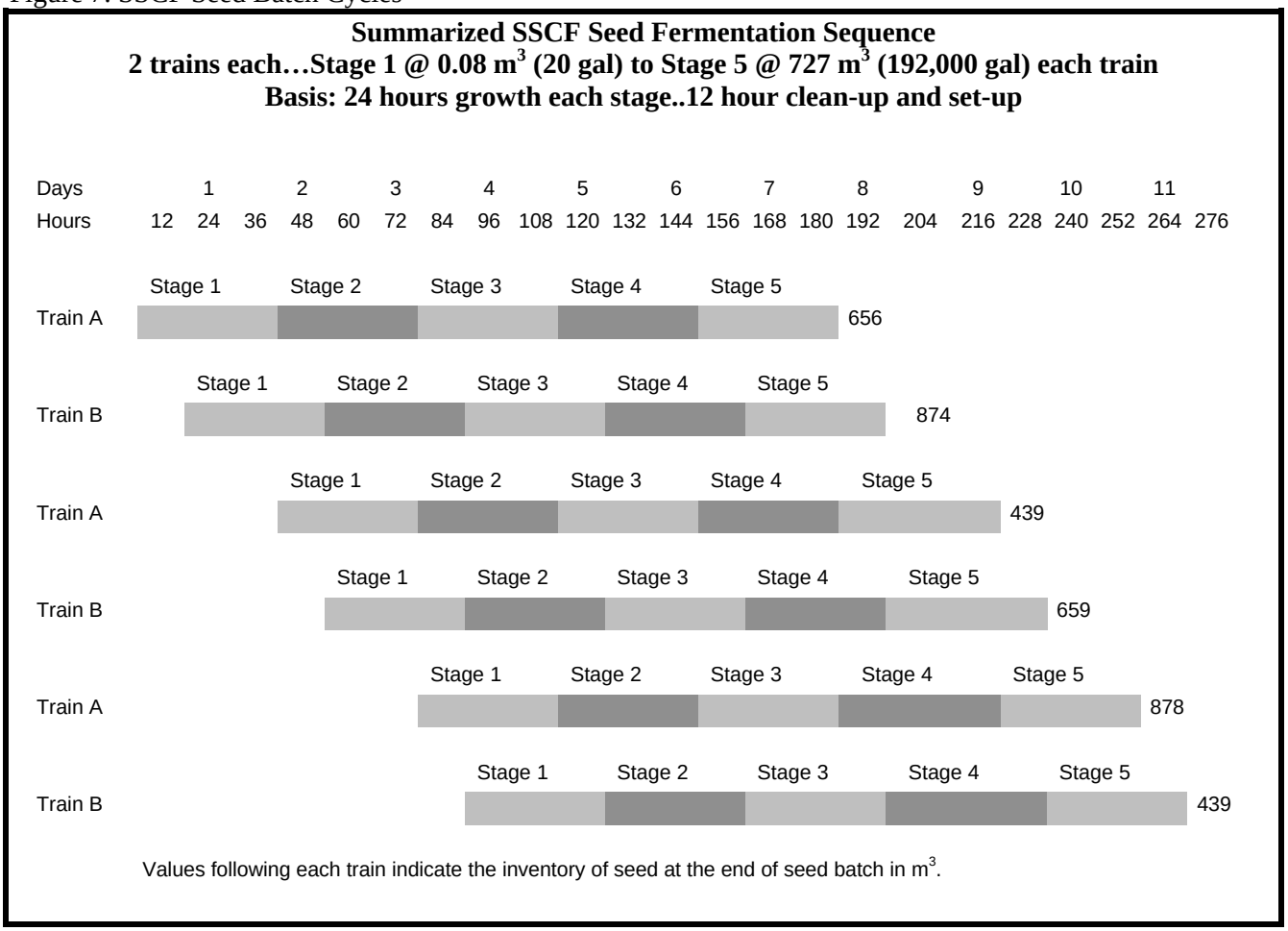

Table 5: Seed Train Specifications[27,28,29]

Inoculum Level	10% of total
Batch Time	24 hr
Fermenter Turn-Around Time	12 hr
Number of Trains	2
Number of Fermenter Stages	5
Maximum Fermenter Volume	655 m^3 (173,000 gal)

The two largest seed fermenters are large tanks (F-304 and F-305) with internal cooling coils (H-304 and H-305) and agitators (A-304 and A-305) that are costed separately. The small fermenters are package units (agitator and jacket included). The seed fermenters operate at 30°C. The incoming hydrolyzate (about 60°C) is cooled in H-301 with cooling water to about 35°C. Well water at 13°C, supplemented with either cooling water or chilled water is used to maintain the fermenters at 30°C. The well water is then used as make-up water to the process. The coil size was calculated using a tank coil correlation from Kern[30]. The agitators were sized based on Delta-T's experience with similar systems. The design numbers for agitation were 20 W/m^3 (0.1 hp/1000 gal) for F-305 (727 m^3 [192,000 gal]) and 60 W/m^3 (0.3 hp/1000 gal) for F-304 (72.7 m^3 [19,200 gal]). The three smaller seed fermenters (F-301-3) are designed as package-jacketed, agitated reactors (0.08, 0.8 and 7.6 m^3 [20, 200, and 2000 gal], respectively). ICARUS[23] was used to estimate the agitation powers of, 0.75 kW or 9.8 kW/m^3 (1 hp or 50 hp/1000 gal) for F-301, 3.7 kW or 4.9 kW/m^3 (5 hp or 25 hp/1000 gal) for F-302, and 18.6 kW (25 hp) or 2.5 kW/m^3 (13 hp /1000 gal) for the F-303.

Table 6: SSCF Seed Train Reactions and Conversion[31]

Saccharification Reaction								
Reaction							**Conversion**	
$Cellulose_n$	+	n H_2O	→ n Glucose				Cellulose	0.2
Fermentation Reactions								
Reaction							**Conversion**	
Glucose	+	2 Ethanol	→ 2 CO_2				Glucose	0.85
Glucose	+	1.2 NH_3	→ 6 *Z. mobilis*	+	2.4 H_2O	+ 0.3 O_2	Glucose	0.04
Glucose	+	2 H_2O	→ 2 Glycerol	+	O_2		Glucose	0.002
Glucose	+	2 CO_2	→ 2 Succinic Acid	+	O_2		Glucose	0.008
Glucose			→ 3 Acetic Acid				Glucose	0.022
Glucose			→ 2 Lactic Acid				Glucose	0.013
3 Xylose			→ 5 Ethanol	+	5 CO_2		Xylose	0.8
Xylose	+	NH_3	→ 5 *Z. mobilis*	+	2 H_2O	+ 0.25 O_2	Xylose	0.03
3 Xylose	+	5 H_2O	→ 5 Glycerol	+	2.5 O_2		Xylose	0.02
Xylose	+	H_2O	→ Xylitol	+	9.5 O_2		Xylose	0.02
3 Xylose	+	5 CO_2	→ 5 Succinic Acid	+	2.5 O_2		Xylose	0.01
2 Xylose			→ 5 Acetic Acid				Xylose	0.01
3 Xylose			→ 5 Lactic Acid				Xylose	0.01

Note: The saccharification reaction is modeled to be in series with the fermentation reactions, so that glucose generated by saccharification is available for the subsequent fermentation reactions.
Ammonia is shown as a reactant for material balance purposes only. Corn steep liquor is the actual nitrogen source.

Table 6 gives the reactions and conversions used in the seed fermentations. The first reaction is the hydrolysis or saccharification reaction and the second set is the microorganism production.

Two high-capacity transfer pumps are used (P-302) to transfer the seed to the seed hold tank (T-301) in a timely fashion, approximately 2.5 hr. Two pumps are required because this is the maximum size of rotary lobe pump available from Waukesha Pump Company. A rotary lobe pump is used, to avoid damaging the seed by pump sheer.

The seed hold tank (T-301) is sized to hold 20% more than the fifth seed reactor (F-305). A rotary lobe pump (P-301) is then used to continuously feed the seed to the production fermentation trains.

Production SSCF is conducted in trains of 950,000-gal vessels (see PFD-P100-A302). The residence time has been determined to be 7 days.[32] In all, 17 vessels are required for this residence time. These are arranged in two continuous trains of six vessels each and one of five vessels. For a continuous fermentation, Delta-T felt that this was a reasonable train length.

Detoxified hydrolyzate slurry is first cooled to about 35°C in H-302 using cooling water and then added directly to the first fermenter. In addition, inoculum from the seed train at a ratio of 1/10 of the hydrolyzate is fed along with cellulase from Area 400. For the base case, cellulase is fed at the rate of 15 filter paper units (FPU)/g cellulose.[33] Corn steep liquor is added as a nutrient at a rate of 0.25%.[34] Table 7 summarizes the design specifications used for SSCF production.

Table 7: SSCF Production Specifications[32,33,34]

Temperature	30°C
Initial Fermentation Solids Level	20%
Residence Time	7 days
Size of Vessels	3596 m^3 (950,000 gal) each
Number of Vessels	18
Number of Continuous Trains	3
Inoculum Level	10%
Cellulase Loading	15 FPU/g cellulose
Corn Steep Liquor Level	0.25%

The reactions and conversions used in the production SSCF fermenters are given in Tables 8 and 9. Saccharification or hydrolysis reactions are listed in Table 8; fermentation reactions are listed in Table 9. In the model, these reactions are carried out in series, meaning that any product of the hydrolysis reactions (Table 8) can be consumed as a reactant in the fermentation reactions (see Table 9).

Table 8: Production SSCF Saccharification Reactions and Conversions[35]

Reaction			**Conversion**	
$(Cellulose)_n$	$+ m H_2O$	$\rightarrow$ m Glucose Olig	Cellulose	0.068
$(Cellulose)_n$	$+ ½n H_2O$	$\rightarrow$ ½n Cellobiose	Cellulose	0.012
$(Cellulose)_n$	$+ n H_2O$	$\rightarrow$ n Glucose	Cellulose	0.8
Cellobiose	$+ 2 H_2O$	$\rightarrow$ 2 Glucose	Cellobiose	1.0

Table 9: SSCF Fermentation Reactions and Conversions[35]

Reaction						Conversion	
Glucose			→ Ethanol	+ $2\ CO_2$		Glucose	0.92
Glucose	+	$1.2\ NH_3$	→ 6 *Z. mobilis*	+ $2.4\ H_2O$	+ $0.3\ O_2$	Glucose	0.027
Glucose	+	$2\ H_2O$	→ 2 Glycerol	+ O_2		Glucose	0.002
Glucose	+	$2\ CO_2$	→ 2 Succinic Acid	+ O_2		Glucose	0.008
Glucose			→ 3 Acetic Acid			Glucose	0.022
Glucose			→ 2 Lactic Acid			Glucose	0.013
3 Xylose			→ 5 Ethanol	+ $5\ CO_2$		Xylose	0.85
Xylose	+	NH_3	→ 5 *Z. mobilis*	+ $2\ H_2O$	+ $0.25\ O_2$	Xylose	0.029
3 Xylose	+	$5\ H_2O$	→ 5 Glycerol	+ $2.5\ O_2$		Xylose	0.002
Xylose	+	H_2O	→ Xylitol	+ $0.5\ O_2$		Xylose	0.006
3 Xylose	+	$5\ CO_2$	→ 5 Succinic Acid	+ $2.5\ O_2$		Xylose	0.009
2 Xylose			→ 5 Acetic Acid			Xylose	0.024
3 Xylose			→ 5 Lactic Acid			Xylose	0.014

Note: The saccharification reactions are modeled to be in series with the fermentation reactions, so that glucose generated by saccharification is available for the subsequent fermentation reactions.
Ammonia is shown as a reactant for material balance purposes only. Corn steep liquor is the actual nitrogen source.

In addition to saccharification and fermentation to ethanol, loss to other products because of contaminating organisms occurs. This is modeled as a side stream (bypassing the SSCF) that reacts to lactic acid. This allows the model to simply assign a percent loss to contamination and the conversions in Table 9 do not have to be adjusted. The loss to other products by caused by *Z. mobilis* are given in the SSCF reactions in Table 9. Table 10 shows the contamination reactions. A total of 7% of the sugars available for fermentation are considered lost to contamination.[36]

Table 10: Production SSCF Contamination Loss Reactions[36]

Reaction		Conversion	
Glucose	→ 2 Lactic Acid	Glucose	1.0
3 Xylose	→ 5 Lactic Acid	Xylose	1.0
3 Arabinose	→ 5 Lactic Acid	Arabinose	1.0
Galactose	→ 2 Lactic Acid	Galactose	1.0
Mannose	→ 2 Lactic Acid	Mannose	1.0

The fermenters are cooled using a pump-around loop that consists of a centrifugal pump P-300 and heat exchanger, H-300. The heat exchanger is generally cooled with well water at 13°C. When the well water is not sufficient for complete cooling, it is supplemented by either cooling or chilled water, depending on the time of year. See the utilities section (Area 900) for an explanation of the mix of cooling required. At the end of the fermentation train, a beer well collects the fermented beer and scrubber bottoms. With a residence time of 8 min, this tank allows for some surge between fermentation and distillation.

II.3.3 Cost Estimation

In general the material of construction for all equipment in this section is 304SS, which is the most cost-effective material for the fermentation service.

We estimated all centrifugal pumps for this section using the ICARUS[23] cost estimation software. Costs of the rotary lobe pumps (P-301 and P-302) were obtained as verbal quotations from Waukesha Pump Company.

The cost for the major agitators, those for the larger fermenters (A-300) and other large applications (A-301, A-305) were based on vendor (Lightnin Corp.) quotes that Delta-T had obtained for a different project. The large agitators are side-mounted. This minimizes additional structural steel required for top-mounted agitator supports. These quotes were scaled using a scaling exponent from Garrett[7] to fit the size required here. We used ICARUS to estimate the smaller agitators (A-304, A-306).

We obtained a quotation from Chattanooga Boiler and Tank Co. for the larger fermenters and tank (F-300, F-305, and T-301). The smaller seed fermenters (F-301, F-302 and F-303) were estimated with ICARUS as jacketed, agitated packages. The other, medium-size tanks (F-304, T-306) were estimated with ICARUS as stand-alone tanks.

Several plate and frame heat exchangers in this area (H-300, H-301, and H-302) were costed by Delta-T from previous jobs. In the case of H-300, the cost from ICARUS was exactly the same as Delta-T's number and is used here. The seed fermenter coil coolers (H-304 and H-305) were costed with ICARUS.

II.4 Enzyme Production – Area 400 (PFD-P100-A401-2)

II.4.1 Overview

Cellulase, a collection of enzymes that hydrolyze cellulose to form glucose, is produced in this process area. The enzyme is used in Area 300 (SSCF) where glucose is produced and then fermented into ethanol.

The enzymes that make up cellulase are: (1) endoglucanases, which attack randomly within the cellulose fiber reducing polymer size rapidly; (2) exoglucanases, which attack the ends of cellulose fibers, allowing it to hydrolyze highly crystalline cellulose; and (3) β–glucosidase, which hydrolyzes cellobiose to glucose. Several bacteria and fungi naturally produce these enzymes, including bacteria in ruminant and termite guts and white rot fungus.[37] The most common organism used to produce cellulase industrially is *Trichoderma reesei*, so it was used for this analysis.

T. reesei is a fibrous fungus that can grow and produce cellulase in aerobic bioreactors. Eleven 1,000 m^3 (264,000-gal) bioreactors make up the largest section of this area. The bioreactors are run batchwise, with eight in operation, one being drained, one being filled, and one being cleaned and sterilized at all times. The carbon source for the bioreactors is detoxified, pretreated biomass slurry that has been diluted. Whole corn steep liquor (CSL) and other trace nutrients are also added to the bioreactors. Ammonia is used to control pH and provides additional fixed nitrogen to the organisms. The bioreactors are sparged with compressed and cooled air and corn oil is used as an antifoam to prevent excessive foaming within the reactors. The reactors are cooled by chilled water flowing through internal coils. Inoculum is

produced in three trains with three vessel sizes in each train. Each vessel in the seed trains is run batchwise and detoxified, pretreated biomass slurry, CSL, nutrients, dilution water, and ammonia are pumped to it. Air is also sparged through each of the seed vessels, which are cooled with chilled water.

II.4.2 Design Basis Description

Table 11 lists the primary parameters and NREL near-term goals for cellulase production .

Table 11: Cellulase Production Parameters

Cellulase Requirement for SSCF	15 FPU/g cellulose
Yield	200 FPU/(g cellulose + xylose)
Productivity	75 FPU/(L • hr)
Initial Cellulose Concentration	4%

Assuming that the specific activity of cellulase is 600 FPU/g protein, the yield is 0.33 g protein/(g initial cellulose + xylose) and the productivity is 0.125 g protein/(L • hr).

In an experiment[38] completed on October 30, 1998, NREL researchers achieved a 168 hr yield of approximately 250 FPU/g cellulose and a productivity of 85 FPU/(L • hr). That experiment was run in a 5-L fermenter using 5% Solka-Floc as the substrate and the dissolved oxygen concentration was kept at or above 50% saturated. These results have been achieved only once and are much higher than has been achieved on pretreated biomass, so the yield and productivity used in the model are slightly lower. The initial substrate concentration is also lower because of potential inhibitors in pretreated biomass.

We used ASPEN to calculate the flow of the feed stream to cellulase production and the number of required cellulase vessels to provide the required amount of enzyme to SSCF. The flows of cellulose plus xylose are calculated to provide 15 FPU/g cellulose to SSCF and sum to 2316 kg/hr (5,106 lb/hr). With a 200 FPU/g yield, a productivity of 75 FPU/(L • hr), and a working volume of 80% the total fermentation volume required is 7,720 m^3 (2,040,000 gal.). The maximum allowable size of each cellulase production vessel has been estimated to be 1,000 m^3 (264,000 gal) because cellulase production is an aerobic bioreaction. As mentioned previously, 11 cellulase production vessels are required. The flow from cellulase production (Stream 420) is 39,211 kg/hr (86,445 lb/hr) so the residence time of each batch production run is approximately 160 hr and the filling/cleaning/draining time is 60 hr. Figure 8 shows the batch schedule.

Three trains of three seed fermenters provide inoculum to the production bioreactors. They are all sized to provide a 5% inoculum to the next scale; the smallest (F-401) is 125 L [33 gal.], which is 5% of the size of F-402 (2.5 m^3 [660 gal.]), that is 5% of the size of F-403 (50 m^3 [13,200 gal.]), that is 5% of the size of the production vessels (1,000 m^3 [264,000 gal.]). The 5% inoculum size was chosen because it matches experimental work at NREL.[38] These are all aerated at 0.577 vvm (volume/min of air per volume of reactor) to match the main bioreactors. Three trains were chosen because each production fermenter has a batch time of 160 hr. Because 8 out of the 11 vessels are in use, inoculum is needed every 20 hr. With three trains each vessel gets a residence time of 40 hr, which NREL's experimental work has shown to be long enough to grow cell mass[38] but not long enough to make enzyme. A cleaning/sterilization time of 20 hr is also needed.

Figure 8, Batch Cycles For Cellulase Seed and Production

| | | |

Each batch cycle begins with cleaning and sterilizing a cellulase production tank as described in Area 900. The clean, sterile, empty vessel is filled with slurry from the mixed pretreated solids and conditioned liquor to a level where the final concentration, after all other additions are made, will be 4% cellulose. At the same time, recycle water flows into the vessel to dilute the slurry. Whole CSL is added to the vessel to reach a final concentration of 1% (after all additions are made). Nutrients are also added to the vessel. The required nutrient concentrations are from Schell et al.[39], because updated information is not available. NREL researchers have not yet optimized nutrient requirements in cellulase production from pretreated biomass. The nutrient requirements from Tables 3-4 of Schell et al.[39] are restated in Table 12. Corn oil is added as an antifoam to achieve a final batch concentration of 0.1% (vol/vol). Once all additions are made, the batch cycle is allowed to run at 28°C for 160 hr.

Table 12: Cellulase Production Nutrient Requirements[39]

Component	Amount (g/L)
$(NH_4)_2SO_4$	1.4
KH_2PO_4	2.0
$MgSO_4 \bullet 7H_2O$	0.3
$CaCl_2 \bullet 2H_2O$	0.4
Tween 80	0.2

Mass balances have not been done on cellulase production bioreactors so we used estimates of the reaction yields in the ASPEN model. In the modeled production bioreactors, 47% of the soluble sugars were converted using cell mass production stoichiometry, and 53% of the soluble sugars were converted using enzyme production stoichiometry. All the cellulose, insoluble mannan, and insoluble galactan were converted using enzyme production stoichiometry. Both stoichiometries consist of reacting the sugar with oxygen, ammonia, and sulfur dioxide to form water and carbon dioxide as well as the product (cell mass or enzyme protein). The reaction stoichiometry is defined to balance the reaction to form cell mass and enzyme with their defined elemental compositions.[6]

During the entire operation, the bioreactors are sparged with air at a rate of 0.577 vvm after the air is compressed and cooled to 40°C. The airflow rate was calculated to reach a target oxygen transfer rate (OTR) of 80 mmol / (L • hr).[40] The OTR can be increased by increasing the height to diameter ratio of the vessel, increasing the bulk operating pressure, increasing the air flow rate, increasing the agitation power, improving the agitator design, or increasing the inlet oxygen concentration.

For cost optimization purposes, the OTR was calculated using the following equation:

$$OTR = k_l a \quad \frac{\left(C_b^* - C_D\right) - \left(C_t^* - C_D\right)}{ln\left(\frac{C_b^* - C_D}{C_t^* - C_D}\right)}$$

where *OTR* is the oxygen transfer rate (mmol / (L • hr)), $k_l a$ is the volumetric mass transfer coefficient (hr^{-1}), C_b* is the saturated dissolved oxygen concentration at the bottom of the vessel (mmol/L), C_t* is the saturated dissolved oxygen concentration at the top of the vessel (mmol/L), and C_D is the desired dissolved oxygen concentration (mmol/L). The second term is the log mean of the oxygen concentration gradient (the difference between the saturated dissolved oxygen concentration and the desired dissolved oxygen concentration) at the top and bottom. The desired dissolved oxygen concentration is estimated to

be 30% saturated at 1 atm absolute pressure (0.063 mmol/L). Most laboratory cellulase production work is run between 20% and 30% dissolved oxygen as measured, so the desired concentration is comparable to experiments and slightly conservative.

We used Henry's Law, described in the following equation, to calculate the concentration of saturated dissolved oxygen (C_b* and C_t*):

$$p = H * C_L$$

where π is the partial pressure of the gas (i.e., oxygen) (atm), H is Henry's coefficient (atm/(mmol/L)), and C_L is the liquid concentration of the gas (mmol/L). Henry's coefficient was set equal to 1 atm / (mmol/L) for all work.[41]

The volumetric mass transfer coefficient was calculated using the following equation:[42,43]

$$k_l a = 0.026 \left(\frac{P}{V_L} \right)^{0.4} V_G^{0.5} * 3600 \left(sec/\, hr \right)$$

where P is the impeller power consumption (W), V_L is the working volume (m^3), and V_G is the superficial gas velocity (m/s). The equation is good for pure air/water systems with a maximum volume of 2.6 m^3 (687 gal.) nd a power to volume ratio of 500 to 10,000 W/m^3 (2.5 to 51 hp/1000 gal.). An equation (from the same references) is also available for ionic/coalescing systems. The above equation was chosen because it is slightly more conservative. We need to do more work to determine the proper equation and parameter values for use with this system and to determine if this equation form holds true for larger vessels.

Initially, we used the equations above to optimize aeration of the vessels by determining the least overall cost combination of agitation power, tank H/D ratio, and working pressure with air sparged into the vessel. Using the following methodology, we determined the required airflow to reach an OTR of 80 mmol/(L • hr) for many combinations of the four parameters listed above. The volumetric mass transfer coefficient ($k_l a$) was calculated from the given tank geometry (working volume), air flow (air velocity), and agitation power. Next, the saturated oxygen concentration was calculated at the bottom of the vessel using the vessel's working pressure (the headspace pressure), the height of the broth in the vessel, and the oxygen concentration in air. The saturated oxygen concentration was then calculated at the top of the vessel using the vessel's working pressure and an initial estimate of oxygen concentration of the outlet gas. The oxygen concentration gradients at both the top and bottom of the vessel were calculated as well as their log means. Next, the OTR was calculated from the log mean oxygen concentration gradient and the $k_l a$ and the amount of oxygen absorbed in the vessel were calculated from the OTR. The amount of oxygen absorbed in the vessel was also calculated from the flow rate and the inlet and estimated outlet oxygen concentrations. The two were compared and the outlet concentration was modified until they were equal. Multiple air flows were tested for each agitation power, tank H/D ratio, and working pressure to find one close to and above an OTR of 80 mmol / (L • hr).

Assuming that agitators could be designed to avoid problems associated with flooding or burping, we did not attempt to analyze these problems.

Next, we calculated the economics of each combination of agitation power, tank H/D ratio, working pressure, and airflow. Tank, agitator, and air compressor costs from Delta-T's internal databases were added to determine the total capital cost. To annualize that capital cost, we multiplied it by 0.188. The electricity used by the air compressor and the agitators were summed and costed at \$0.042/(kW • hr) to determine an annual electricity cost. The cooling water required by the air compressor and the air separation unit were summed and costed at \$0.042/m^3 (\$0.16/1000 gal) to determine an annual cooling water cost. We then calculated the total annual cost as the sum of the annualized capital cost, the annual electricity cost, and the annual cooling water cost. Finally, we divided by the ethanol production rate of 206,660 m^3/yr (54,594,000 gal/yr) to determine a cost per gallon of ethanol.

The initial results from this study were used in the process design and economic model and showed that pressure vessels increased the cost of cellulase production over atmospheric vessels. The initial results also showed that an H/D ratio of 2 and an agitation power requirement of 500 W/m^3 (2.54 hp/(1000 gal)) would be the most cost-effective arrangement with atmospheric vessels and sparged air. To achieve an OTR greater than 80 mmol / (L • hr) the airflow was set at 0.577 vvm. The OTR calculated for that set of conditions with the final model is 81 mmol / (L • hr).

We also conducted a second preliminary analysis that included oxygen supplementation for enriched air. The results of the second analysis (shown in Figures 9-12) indicated that increasing the oxygen concentration reduces the cost of enzyme production. Figure 9 shows the required air flow to achieve the required OTR with different agitation powers and H/D ratios. As one would expect, at greater H/D ratios (i.e., taller and skinnier tanks) power becomes less important because the time that gas spends in the bioreactor is increased. Figure 10 shows the required gas flow to achieve the required OTR with different oxygen concentrations in the feed. As expected, the gas flow is reduced significantly with increased oxygen concentration. Figure 11 shows the cost, calculated using the method outlined above, of the enzyme area per gallon ethanol as a function of H/D ratio and mixing power. The cost decreases more significantly with less mixing than with more mixing and is minimized between \$39.60/m^3 and \$52.80/m^3 (\$0.15/gal and \$0.20/gal). Figure 12 shows the cost of the enzyme area as a function of oxygen concentration in the feed. The figure shows that when the oxygen concentration is above 50%, the cost of cellulase production is less than the minimum cost with no oxygen supplementation. We will do more work to verify the economic assumptions, but it appears that oxygen supplementation may be the optimum process configuration.

Delta-T stated that it is proper to assume that heat loss from the bioreactors is equivalent to heat input from the agitator. Cooling coils (H-400) are designed to remove reaction heat. We used the method described in Kern[44] to calculate the overall heat transfer coefficient with fouling.

II.4.3 Cost Estimation

Chattanooga Boiler and Tank Company quoted the production bioreactor (F-400) costs. The quote was for 1000 m^3 (267,000 gal) vessels with an H/D ratio of 1. To account for extra steel required (about 226.8 kg [500 lb]) for an H/D ratio of 2, we increased the quoted cost by \$652/vessel Lightnin quoted the production agitator and motor (A-400) costs. The agitator was quoted as model 784S600 with a 447 kW (600-hp) motor with dual A315 impellers rotating at 45.6 rpm. The 447 kW (600-hp) motor provides more than the required 400 kW (536 hp) to achieve the required 500 W/m^3 (2.5 hp/1000 gal) mixing power. The tanks and agitators are constructed using 304SS. The cooling coils (H-400) were costed using ICARUS.[23]

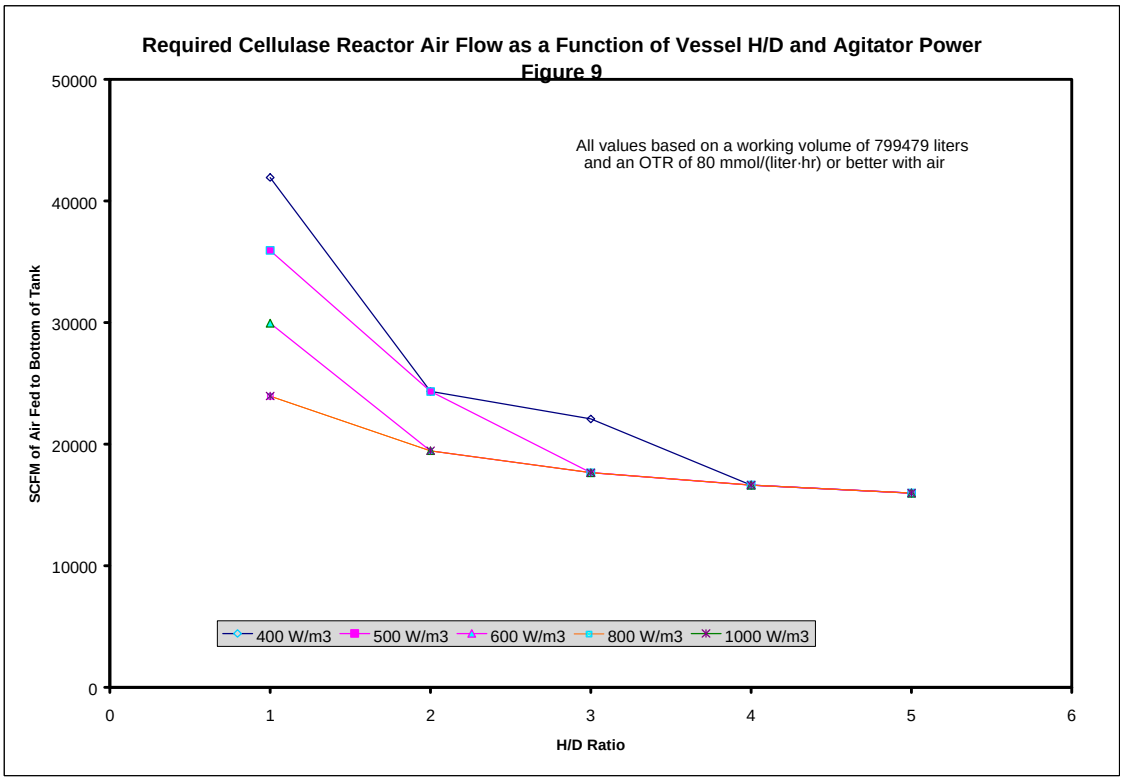
Required Cellulase Reactor Air Flow as a Function of Vessel H/D and Agitator Power
Figure 9
All values based on a working volume of 799479 liters
and an OTR of 80 mmol/(liter·hr) or better with air
SCFM of Air Fed to Bottom of Tank
50000
40000
30000
20000
10000
0
0
1
2
3
4
5
6
H/D Ratio
400 W/m3
500 W/m3
600 W/m3
800 W/m3
1000 W/m3

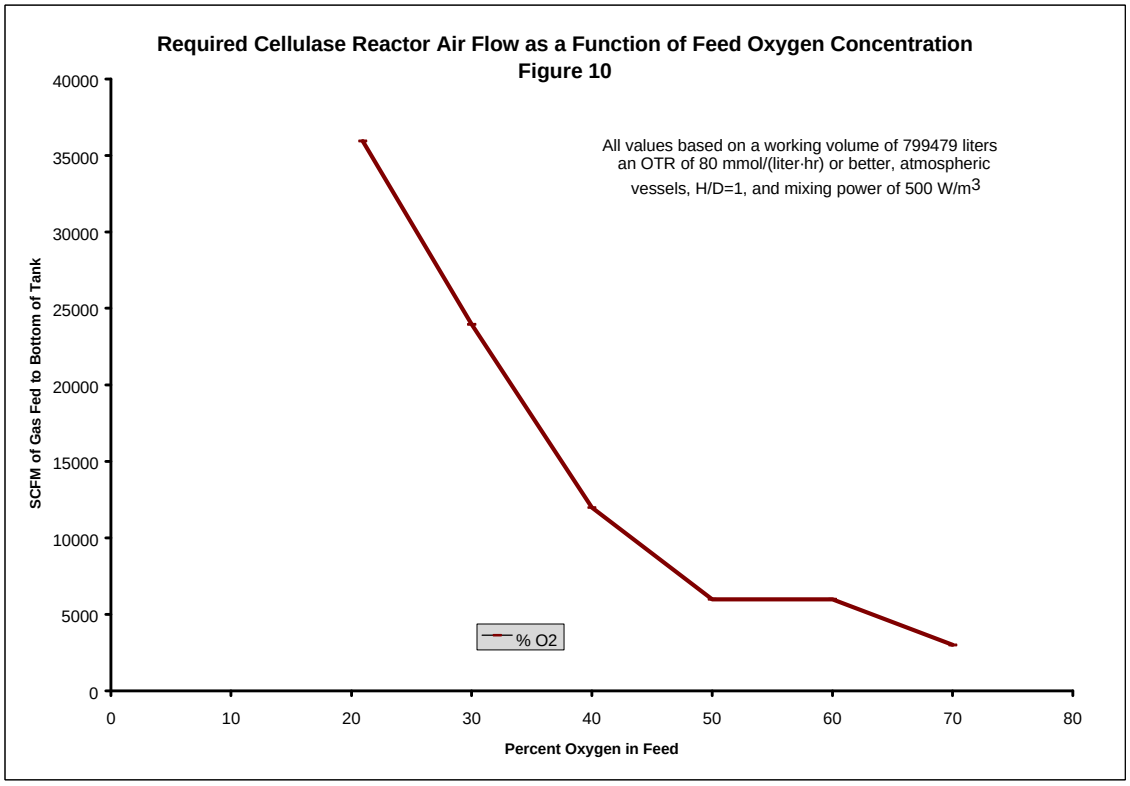
Required Cellulase Reactor Air Flow as a Function of Feed Oxygen Concentration
Figure 10
All values based on a working volume of 799479 liters
an OTR of 80 mmol/(liter·hr) or better, atmospheric
vessels, H/D=1, and mixing power of 500 W/m3
SCFM of Gas Fed to Bottom of Tank
40000
35000
30000
25000
20000
15000
10000
5000
0
0
10
20
30
40
50
60
70
80
Percent Oxygen in Feed
% O2

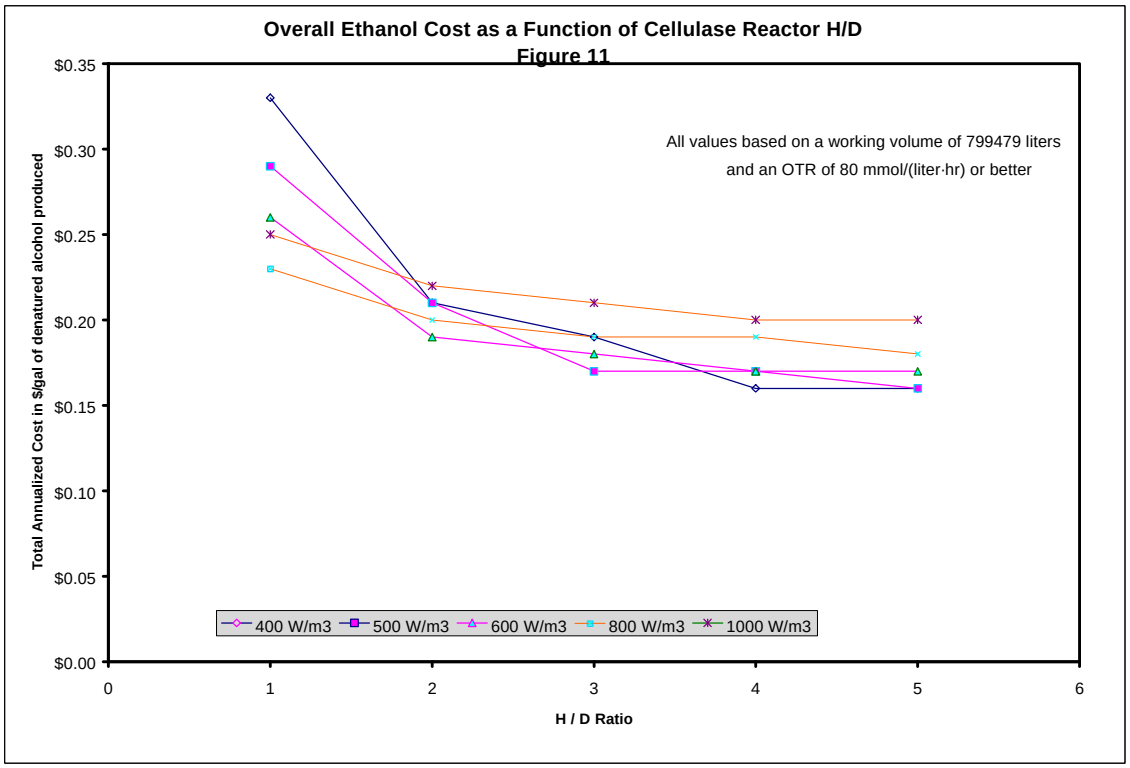
Overall Ethanol Cost as a Function of Cellulase Reactor H/D
Figure 11
All values based on a working volume of 799479 liters
and an OTR of 80 mmol/(liter·hr) or better
Total Annualized Cost in $/gal of denatured alcohol produced
$0.35
$0.30
$0.25
$0.20
$0.15
$0.10
$0.05
$0.00
0
1
2
3
4
5
6
H / D Ratio
400 W/m3
500 W/m3
600 W/m3
800 W/m3
1000 W/m3

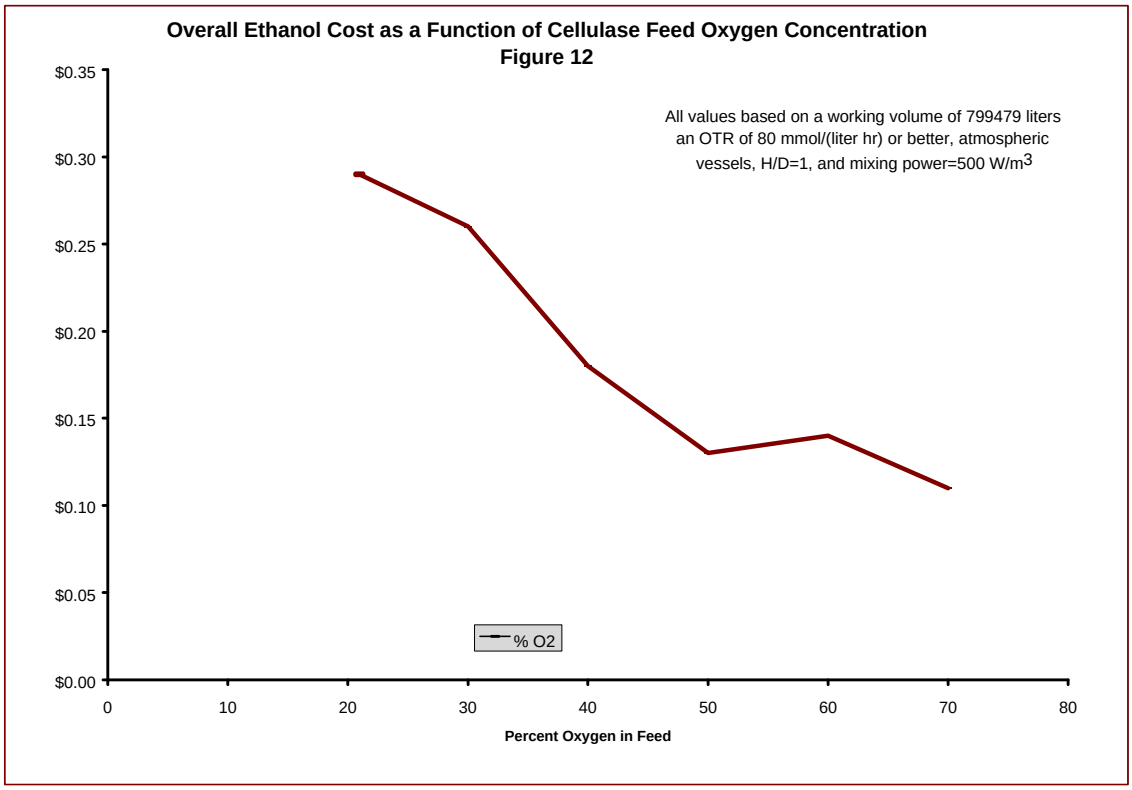
Overall Ethanol Cost as a Function of Cellulase Feed Oxygen Concentration
Figure 12
All values based on a working volume of 799479 liters
an OTR of 80 mmol/(liter hr) or better, atmospheric
vessels, H/D=1, and mixing power=500 W/m3
$0.35
$0.30
$0.25
$0.20
$0.15
$0.10
$0.05
$0.00
0
10
20
30
40
50
60
70
80
Percent Oxygen in Feed
% O2

Using ICARUS, we costed the cellulase inoculum fermenters (F-401-3) as stirred stainless steel reactors. Their sizes are 0.125 m^3 (33 gal), 2.5 m^3 (660 gal), and 50 m^3 (13,209 gal). Waukesha estimated the inoculum transfer pump cost for a rotary lobe pump and the cost was scaled to 16.5 m^3/hr (72.5 gpm).

Ingersoll-Rand compressors (model 5CII250M2), which would provide sparge air to the system, were quoted. Each compressor has a capacity of 630.6 m^3/min (22,271 SCFM) and a 2983 kW (4000-hp) motor.

The remaining pumps were all costed as centrifugal pumps using ICARUS. The cellulase transfer pump and media pump were specified as stainless steel and the antifoam pump was specified as carbon steel because of the lack of water in that stream. We used ICARUS to cost the media-prep tank as a mixed tank and costed the antifoam tank as a polyethylene tank from the McMaster[45] catalog.

II.5 Product Recovery and Water Recovery (Distillation, Dehydration, and Evaporation) – Area 500 (PFD-P100-A501-4)

II.5.1 Overview

Distillation and molecular sieve adsorption are used to recover ethanol from the raw fermentation beer and produce very near 100% ethanol. Distillation is accomplished in two columns—the first removes the dissolved CO_2 and most of the water, and the second concentrates the ethanol to a near azeotropic composition (see Figure 13).

All the water from the nearly azeotropic mixture is removed by vapor phase molecular sieve adsorption. Regeneration of the adsorption columns requires that an ethanol water mixture be recycled to distillation for recovery.

Fermentation vents (containing mostly CO_2, but also some ethanol) as well as the beer column vent are scrubbed in a water scrubber, recovering nearly all of the ethanol. The scrubber effluent is fed to the first distillation column along with the fermentation beer.

The bottoms from the first distillation contains all the unconverted insoluble and dissolved solids. The insoluble solids are separated by centrifugation and sent to the burner (Area 800). The liquid from the centrifuge is concentrated using waste heat from the distillation. The concentrated syrup from the evaporator is sent to the burner and the evaporated condensate is used as clean recycle water to the process.

Because the amount of stillage water that can be recycled is limited, an evaporator is included in the process. The total amount of the water from the centrifuge that can be directly recycled is 25%. Recycling too large a quantity of this material can result in levels of ionic strength and osmotic pressures that can be detrimental to the fermenting organism's efficiency. In a typical grain-to-ethanol facility, this recycle can be limited to as low as 10% of the centrifuge filtrate stream to minimize this effect. For the water that is not recycled, the evaporator concentrates the solids in syrup that can be sent to the burner, minimizing the load to wastewater treatment.

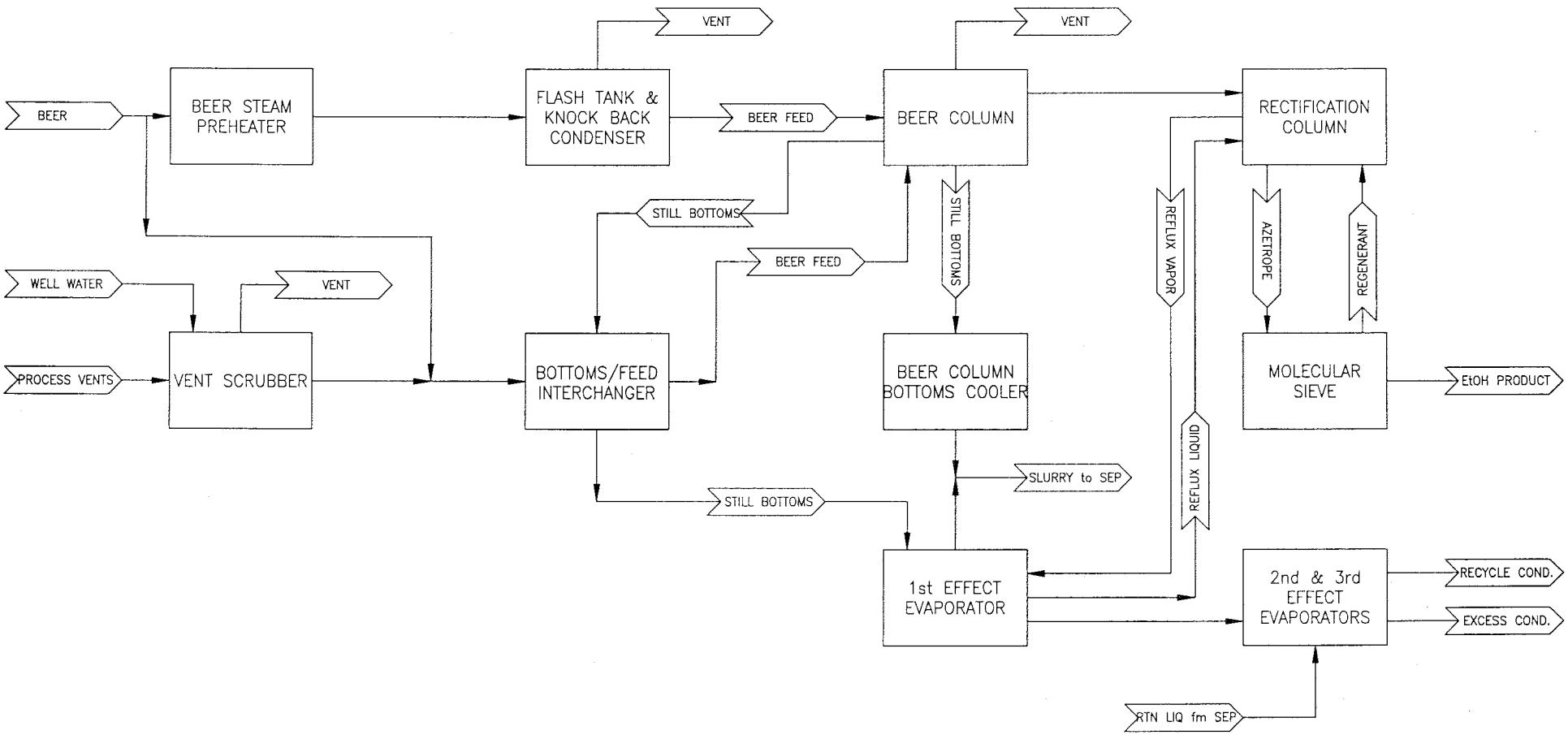

	SCALE	DATE
A	INITIAL RELEASE	9/30/98
B	DELTA-T MODIFICATION	9/30/98

NREL NATIONAL RENEWABLE ENERGY LABORATORY
Biotechnology Center For Fuels And Chemicals

Section A500 – September 1998
Cellulosic Biomass to Ethanol

PFD-P100-A500 B

II.5.2 Design Basis Description

Beer from the fermentation area is first preheated with flash vapor from the pretreatment reactor (H-201). This feed to the beer column (PFD-P100-A501) is then further heated by interchange with the bottoms from the beer column in H-512. The beer column (D-501) operates in a mode to remove the CO_2 and as little ethanol as possible overhead, while removing about 90% of the water in the bottoms. The ethanol is removed as a vapor side draw from the column and fed directly to the rectification column (D-502).

This separation (D-501) is accomplished with 32 actual trays at 48% efficiency with the feed on actual tray 4 from the top. Nutter V-grid trays are used for this purpose. These trays have been found to tolerate the solids well and have a relatively good efficiency. Both columns D-501 and D-502 are operated at 1.77 atm (26 psia) overhead pressure. This relatively low pressure keeps the reboiler temperature down and minimizes fouling. The tray spacing is 0.61 m (24 in.) and the column diameter is 3.9 m (12.8 ft). The reflux ratio required is 6.1:1. The overheads are vented to the scrubber and contain 83.5% CO_2, 12% ethanol, and 4.5% water. All the CO_2 and only 0.4% of the ethanol is removed here. Most of the ethanol vented (99%) will be recovered and recycled via the vent scrubber. In addition, about 0.8% of the ethanol fed is lost in the bottoms stream. Nearly 99% of the ethanol fed is removed as a 37.4% w/w mixture with water as a vapor side draw from the column at actual tray 8. Heat is supplied to a forced recirculation reboiler (H-501) by low-pressure (4.4 atm [65 psia]) steam. A forced circulation reboiler is used in an effort to accommodate the solids present in the bottoms.

The vapor side draw from D-501 is fed directly to D-502, the rectification column (PFD-P100-A502). This column uses 60 Nutter V-Grid trays at a slightly higher efficiency of 57%. The D-501 vapor is fed on tray 44 (from the top) and the recycle from adsorption, which is higher in ethanol (72% w/w versus 37% w/w) is fed on tray 19 (from the top). The column above tray 44 is 3.5 m (11.5 ft) in diameter; below that it is 1.2 m (4 ft) in diameter. The required reflux ratio is 3.2:1 to obtain a vapor overhead mixture of 92.5% w/w ethanol and a bottoms composition of 0.05% w/w ethanol. Only 0.1% of the ethanol from fermentation is lost in the bottoms. The composition of 7.5% water in the feed to the adsorption column represents only 0.6% of the water from entering distillation. Reflux condensing for this distillation is supplied by interchange with the evaporator, E-501. An ancillary condenser (H-505) is supplied for start-up. Heat is supplied to the column in a thermosyphon reboiler (H-502) with low-pressure (4.4 atm [65 psia]) steam.

As mentioned earlier, all ethanol-containing vents are collected and sent through a water scrubber (T-512). This is a packed column using Jaeger Tri-Pack plastic packing and recovers 98.7% of the ethanol with 4 theoretical stages and 7.6 m (25 ft) of packing. A flow rate of about 0.22 m^3/min (60 gpm) of well water is used. The resulting effluent is 2.5% w/w ethanol and is sent to the beer well for feeding to D-501. The design basis is to adsorb >98% ethanol in the vents and to vent no more than 36.3 MT (40 ST) per year of organics for air pollution considerations.

Overhead vapor from D-502 is fed to the Delta-T molecular sieve adsorption unit (M-503). The design of this unit is generally proprietary to Delta-T, but the general arrangement is given on PFD-P100-A503. Saturated vapor from the distillation is first superheated and fed to one of two adsorption columns. The adsorption column removes all the water and a small portion of ethanol. The pure ethanol vapor is interchanged with regenerate condensate and finally condensed and pumped to storage. While one bed is adsorbing water, the other is regenerating. Regeneration is carried out by passing a very small slip stream

of pure ethanol vapor back through the exhausted bed while a vacuum is applied. The water is stripped off the adsorbent. The mixture is then condensed and returned to the rectification column (D-502).

Finally, the beer column (D-501) bottoms are sent to the first effect evaporator (E-501). This effect is heated by both condensing the reflux vapor to the rectification column (D-502) and very low pressure steam (1.7 atm [25 psia]). This dual heating is accomplished using a split tubesheet evaporator that prevents the steam from mixing with the reflux. About 21% (37% of the total evaporation) of the water entering this first effect is evaporated. In addition, the slurry is cooled from 117°C to 86°C, a more suitable temperature for centrifugation. The slurry is sent to centrifugation (S-601, PFD-P100-A601) and the centrate is returned to the second evaporator effect (E-502). In the second effect, 44% (32% of the total evaporation) of the water entering is evaporated. A third stage of evaporation (E-502) is used to evaporate 78% of the remaining water (31% of the total water evaporated). The final vapor is condensed in H-517. Of the total feed to the evaporator/centrifuge system, 5% remains as syrup, 45% is removed as a wet cake in the centrifuge and 50% is evaporated. The final syrup (evaporator bottoms) is 60% water. Sixty-percent water is the maximum dissolved solids level that can be achieved without rapid fouling of the evaporator, so the flow of very low-pressure steam to the evaporator is set to achieve this parameter. This syrup is sent to the burner for disposal. The pressure of the third effect is set by the need to easily condense with cooling water at 0.2 atm (3 psia) or 62°C. The system uses high circulation pumps to minimize fouling on the heat transfer surfaces caused by solids adhering to or plating out on the hot surfaces. The pressures of the first and second effects were adjusted to make all 5 evaporators the same size: two units each are used for the first and third effects and one unit for the second effect.

The clean-in-place system services equipment that handles stillage (beer column bottoms) by flushing with a hot caustic solution and recirculating the solution until heat transfer surfaces are clean. Manual acid cleaning, which must be performed occasionally, removes mineral scales. The frequency for this cleaning depends on the operating conditions.

II.5.2.1 Physical Property Model and Parameters

Physical property models and parameters are important throughout a rigorous mass and energy balance model such as the one used here. This is even truer for distillation calculations involving azeotropes such as the separation of ethanol from water. The physical property option[46] selected for this ASPEN model uses the NRTL[47] activity coefficient (g_i) model for the liquid phase fugacity, f_i^{ℓ}, calculation. The vapor phase is modeled using the ideal gas law, which makes the vapor fugacity coefficient equal to one. The vapor phase fugacity coefficient is not nearly as important as the liquid phase fugacity because of the low pressure operation.

The liquid phase equation for liquid fugacity is:

$$f_i^{\ell} = x_i \, g_i \, f_i^{*,\ell}$$

The pure component liquid fugacity, $f_i^{*,\ell}$, reduces to the pure component vapor pressure, $p_i^{*,\ell}$, at low pressures (the Poynting correction is unity). The NRTL activity coefficient model and vapor pressure models used by ASPEN are given below. Tables 13 and 14 give the ethanol and water parameters for those equations.

$$\ln g_i = \frac{\sum_j x_j t_{ji} G_{ji}}{\sum_k x_k G_{ki}} + \sum_j \frac{x_j G_{ij}}{\sum_k x_k G_{kj}} \left(t_{ij} - \frac{\sum_m x_m t_{mj} G_{mj}}{\sum_k x_k G_{kj}} \right)$$

Where:

$$G_{ij} = \exp(-a_{ij} t_{ij})$$

$$t_{ij} = a_{ij} + b_{ij}/T + e_{ij} \ln T + f_{ij} T$$

$$a_{ij} = c_{ij} + d_{ij}(T - 273.15)$$

$$t_{ii} = 0$$

$$G_{ii} = 1$$

$$a_{ij} \neq a_{ji}$$

$$b_{ij} \neq b_{ji}$$

$$c_{ij} = c_{ji}$$

$$d_{ij} = d_{ji}$$

Vapor Pressure Correlation

$$\ln p_i^{*,\ell} = C_{1i} + \frac{C_{2i}}{T + C_{3i}} + C_{4i} T + C_{5i} \ln T + C_{6i} T^{C_{7i}}$$

Table 13: NRTL Activity Coefficient Model Parameters[48]

aij	0
aji	0
bij	-55.1698
bji	670.4442
cij	0.3031
dij	0
eij	0
eji	0
fij	0
fji	0
Lower Temperature Limit	348.15
Upper Temperature Limit	373.15
Note: i – ethanol, j – water	

Table 14: Vapor Pressure Model Parameters[48]

Eq. Parameters	Ethanol	Water
C1	74.475	73.649
C2	-7164.3	-7258.2
C3	0	0
C4	0	0
C5	-7.3270	-7.3037
C6	3.1340E-06	4.1653E-06
C7	2	2
Lower Temperature Limit	159.05	273.16
Upper Temperature Limit	513.92	647.13
Temperature Units, Kelvins Pressure Units, Pascals		

II.5.3 Cost Estimation

The material of construction for the distillation is generally 304SS. We used a correlation from Aersten and Street[49] to size the thermosyphon reboiler. The pumps, reflux drums, and the thermosyphon reboiler (H-502) were costed using ICARUS[23]. Delta-T used information and experience gained in other projects to cost the rest of the equipment. The cost of the first evaporator effect (E-501) was increased by 25% to account for the complexity of two vapor feeds. The molecular sieve package was quoted by Delta-T as the vendor of that equipment.

II.6 Wastewater Treatment – Area 600 (PFD-P100-A601-3)

II.6.1 Overview

The wastewater treatment was well studied by Merrick Engineering[3]. Merrick's engineers reviewed the design and cost estimation of the entire system.

In general, water is collected from the process and held in an equalization basis. From there the water is treated by anaerobic digestion (see Figure 14). During anaerobic digestion, 90% of the organic material present is converted to methane and carbon dioxide (biogas). This biogas is sent to the burner as medium BTU fuel. About 4.2MM BTU/hr (1231 kW) or 8% of the fuel load to the burner is realized with the biogas. After anaerobic digestion the water is sent to an aerobic digestion lagoon, where another 90% of the remaining organics are removed. Aerobic sludge is also generated in this step and is then removed by clarification and filtration. The filtered sludge is sent to the burner/boiler for disposal. Water from the clarifier is now recycled to the process.

The evaporator syrup from area A500 contains about 60% water, so sending it to the burner might not be the most economical alternative. We considered the alternative of sending the evaporator syrup to wastewater treatment Table 15 summarizes the economic differences between the two options.

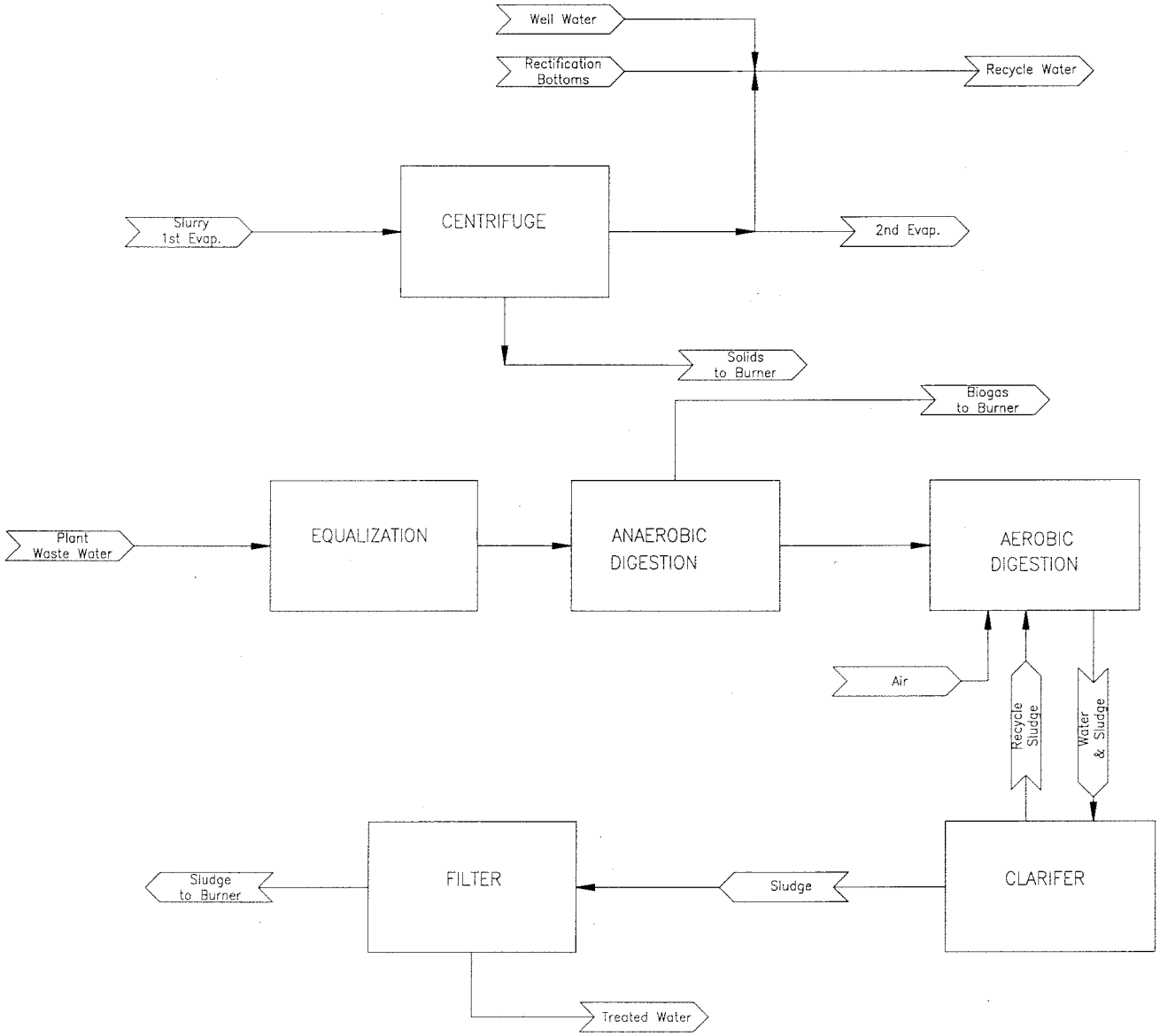

Figure 14

SCALE		DATE
A	INITIAL RELEASE	9/30/98
B	DELTA-T MODIFICATION	9/30/98

NREL NATIONAL RENEWABLE ENERGY LABORATORY
Biotechnology Center For Fuels And Chemicals

Area 600 – Waste Water Treatment
Cellulosic Biomass to Ethanol

PFD-P100-A600 B

Table 15: Comparison of Sending Evaporator Syrup to the Burner or Wastewater Treatment (WWT)

	Destination of Evaporator Syrup		
	Burner	**WWT**	**Nowhere***
Ethanol Production Cost per Gallon	$1.44	$1.50	$1.46
Production Cost Breakdown	cents/gal	cents/gal	cents/gal
Unchanged Costs	37.0	37.0	37.0
Other Raw Materials	17.1	18.1	17.0
Waste Disposal	1.2	1.2	1.2
Electricity	-7.2	-5.7	-1.6
Fixed Costs	14.3	14.7	14.0
Capital Recovery	81.4	84.3	78.5
Capital Cost Breakdown			
Unchanged Areas	$74,900,000	$74,900,000	$74,900,000
WWT	$10,400,000	$16,200,000	$10,400,000
Boiler/Turbogenerator	$44,500,000	$43,800,000	$39,700,000
Utilities	$5,200,000	$5,200,000	$4,900,000
Total Equipment Cost	$135,000,000	$140,100,000	$129,900,000
Added Costs	$98,800,000	$102,200,000	$95,500,000
Total Project Investment	$233,800,000	$242,300,000	$225,400,000
Model	R9906A	W9906F	W9906G

* "Nowhere" is a hypothetical destination just to determine the effect on not putting the syrup in either the Burner or WWT. It is not a realistic scenario, but is included for comparison purposes.

As expected, the cost of wastewater treatment went up considerably when syrup was introduced because of the greatly increased COD (chemical oxygen demand) loading. This is counterbalanced somewhat by the increased biogas to the boiler, which results in higher electric generation and revenue (over the case of syrup to "Nowhere"). However, the overall economics as measured by the cost of ethanol production are more favorable when the syrup is sent to the boiler.

II.6.2 Design Basis Description

The design basis and alternatives are fully explained in the Merrick report.[3]

II.6.3 Cost Estimation

All cost estimation for this process was taken from the Merrick[3] report.

II.7 Product and Feed Chemical Storage – Area 700 (PFD-P100-A701)

II.7.1 Overview

This portion of the plant provides for the bulk storage of chemicals used in the process and product ethanol. Storage of the biomass feedstock is handled in Section A100 of the process. Feed chemicals stored in this area include ammonia, CSL, sulfuric acid, antifoam, diesel fuel (for feedstock handling bulldozers), and gasoline (used as a denaturant for the product ethanol). Water for fire suppression is also stored here.

II.7.2 Design Basis Description

Ethanol product storage is based on Delta-T's experience with fuel ethanol production facilities. The recommended amount of storage (T-701) corresponds to 7 days of production or 4,540 m^3 (1.2 million gal) in each of 2 2,270 m^3 (600,000-gal) carbon steel tanks.

Based on Delta-T's experience, we used 5 days of storage for sulfuric acid (T-703), which corresponds to about 72 m^3 (19,000 gal). Stainless steel (SS316) is used as the material of construction because of the corrosive nature of sulfuric acid. SS316 is the industry standard for ambient temperature sulfuric acid.

Using a flow rate of 568 m^3/hr (2500 gpm) of fire-fighting water (similar to another Delta-T project of about the same size), 2,270 m^3 (600,000 gal) (T-704) will supply 4 hr of operating time. This tank is of carbon steel construction.

Ammonia will most likely be delivered by rail. The largest tank car for this service is 131 m^3 (34,500 gallons). Using about 50% more for storage translates into 218 m^3 (57,500 gallons) of storage (T-706). This is about 4.2 days of storage, requiring a rail car about every 3 days or 2 per week. This vessel will be of carbon steel construction and will require a design pressure 14.6 atm (200 psig).

Antifoam (corn oil) will be delivered in an 30.3 m^3 (8,000-gal) truck. Using a tank that is 50% larger than this (45.5 m^3 [12,000 gal], T-707) results in 7 days of storage.

Diesel fuel for the bulldozers will also be delivered in 30.3 m^3 (8,000 gal) trucks. The approximate consumption rate of diesel fuel is about 0.3 m^3/hr (80 gph). A 12,000-gal tank (T-708) will give about 6 days of storage. This tank is made of carbon steel.

Gasoline is needed to dilute the ethanol being loaded for transportation away from the plant. Five percent gasoline (v/v) is added to the ethanol. The same storage time, 7 days, is used for the gasoline as for ethanol. This results in a 241 m^3 (63,600-gal) tank (T-710). Carbon steel is used for this tank.

The pumps in this section are generally sized for quickly loading trucks (P-701, P-710) or filling process day tanks (P-703, P-707, and P-720). The fire water pump is sized for 568 m^3/hr (2,500 gpm). Other pumps are sized per the process requirements.

II.7.3 Cost Estimation

We used ICARUS to estimate the cost for all equipment in this section.[23]

II.8 Burner, Boiler and Turbogenerator – Area 800 (PFD-P100-A801-4)

II.8.1 Overview

The purpose of the burner, boiler and turbogenerator subsystem is to burn various by-product streams for steam generation. In turn, the steam is used to provide process heat and produce electricity. All of the lignin and some of the cellulose and hemicellulose from the feedstock will remain unconverted through the hydrolysis process. Wastewater from the process is concentrated to a syrup high in soluble solids. Anaerobic digestion of the wastewater produces a biogas high in methane. Aerobic digestion produces a small amount of waste biomass (sludge). Burning these by-product streams to generate steam and electricity for the process reduces solid waste disposal costs and is cheaper than purchasing the utilities.

Reaction Engineering Inc. (REI)[4] investigated the combined system of combustion burner, boiler and turbogenerator. They contacted several vendors to obtain cost and operating information to identify a system suitable for the available feed and steam requirements. REI also obtained quotes for support equipment including a deaerator, baghouse and boiler feedwater pumps.

Three primary feed streams (centrifuge solids, biogas and evaporator syrup) are fed to a Circulating Fluidized Bed Combustor (CFBC). The small amount of waste biomass (sludge) from wastewater treatment is also sent to the burner. The solids' moisture content is reduced from 63% to 51% moisture via direct contact with flue gas exiting the burner cyclone in a drum dryer whereas the biogas and syrup enter the boiler at 4% and 60% moisture, respectively. The moisture of the combined feed to the boiler is 52%. A fan moves air into the combustion chamber. Treated water enters the heat exchanger circuit in the combustor and is evaporated and superheated to 510°C (950°F) and 86 atm (1265 psia) producing 235,210 kg/hr (518,550 lb/hr) of steam. Boiler efficiency, defined as the percentage of the feed heat that is converted to steam heat, is 62% (see Figure 15). Flue gas from the dryer cyclone enters a baghouse to remove particulates, which are landfilled. The gas is exhausted through a stack.

A multistage turbine and generator are used to generate electricity. Steam is extracted from the turbine at 3 different conditions for injection into the pretreatment reactor and heat exchange in distillation and evaporation. The remaining steam is condensed with cooling water and returned to the boiler feedwater system along with condensate from the various heat exchangers in the process. Treated well water is used as makeup to replace steam used in direct injection.

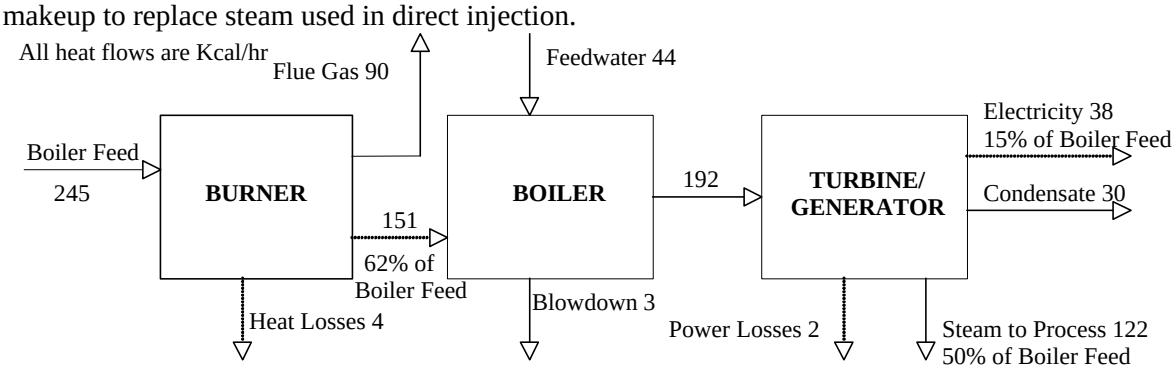

Figure 15 CFBC/Turbogenerator Energy Balance

Makeup water and condensate are softened, deaerated, and preheated with steam to 177°C. Chemicals for pH control, scale removal and oxygen removal are added. Boiler blowdown is 3% of steam production. Figure 15 shows the energy balance around the system; dashed lines are energy streams, solid lines are material streams.

II.8.2 Design Basis Description

The design of the combined burner/boiler/turbogenerator system is basically unchanged from an earlier design by Radian Corporation[50]. It includes a drum dryer that uses the hot flue gas to reduce the moisture in the solids. Alternately, steam could be used as a direct heat source, making a low-Btu vapor available for in-plant heating. Mechanical dewatering is also an option. When combined with maintaining a high solids content in the syrup, drying the solids helps to ensure a stable combustion bed temperature and improved boiler efficiency. Foster Wheeler Energy (FWE) suggested a maximum feed moisture of 50%, other sources[51] suggest 60% is acceptable. There is a wide range of values reported, primarily due to the various combinations of combustor designs and feeds being used. Because of heightened interest in using biomass, pulping wastes, and sewage sludge in place of fossil fuels, new methods of handling higher moisture feeds are being developed such as in-bed drying and staged combustion. Blending the wet feed with dry material or adding auxiliary fuel to maintain the combustion temperature are more traditional methods. A Lower Heating Value (LHV) of 1111-1389 kcal/kg (2000-2500 BTU/lb) is considered a minimum for maintaining combustion[4] the combined feed to the burner has a LHV of 2302 kcal/kg (4144 Btu/lb).

Foster Wheeler Energy confirmed the Radian design using a circulating fluidized bed combustor. This type of combustor is suitable for varying feeds and feed characteristics; however this flexibility is more expensive as compared to a grate or pile combustor. Because the bed material is returned to the combustor after the cyclone, CFBCs have little unburned carbon in the ash. Compared to coal, the combined feed in this process has significantly less ash and could require supplementation of the bed with sand to keep an adequate bed level. Two drawbacks to these units are the high power requirement for circulation and the potential for erosion due to high particulate velocities. Parameters for emissions, efficiency losses and air conditions were supplied by FWE.

Because the steam pressure required is not high (13 atm [191 psia]), NREL engineers originally envisioned a lower pressure system. FWE declined to quote on this system, citing it as non-standard due to the low operating pressure available to move the water/steam over the heating surfaces. After further study, FWE did state that a low-pressure system might be cost-effective because the lower materials cost may pay for the cost of added circuitry on the steam side.

Another option, gasification of the waste streams to produce steam and electricity, is being studied at NREL.

The turbogenerator, which consists of a multistage turbine with extraction ports, generator, and condenser is the other main portion of this system, producing lower pressure steam and electricity. A portion of the steam (27%) is extracted from the turbine at 13 atm (268°C [191 psia, 514°F]), some at 4.4 atm (164°C [65 psia, 327°F]) (46%), and some at 1.7 atm (115°C [25 psia, 239°F]) (4%) for process needs. The remaining steam (23%) is condensed at 0.1 atm (1.5 psia). ABB Power Generation Systems (ABB) provided cost, efficiency and design information, which were used in the model. ABB representatives, when asked about the low-pressure boiler discussed above, stated that the lower pressure option did not allow the most cost effective turbine system; higher-pressure systems supply more electricity on a power

per capital cost basis. Badger,[52] working with Turbodyne, came to the same conclusion, stating that "for larger turbines of 8000 kW upward steam inlet pressure has little effect on capital costs over the range 200-1600 psig". Per ABB, the turbine efficiency was set at 85%; this represents an increase over the previously used value. For the base-case a total of 44 MW of power is generated from this system. The process uses 33 MW, leaving 11 MW that is sold to the grid.

V. Putsche confirmed the FWE and ABB design parameters using an ASPEN burner/boiler model showing good correlation of efficiencies, output flows, and temperatures.[53]

The boiler feedwater system includes a softener for the makeup and condensate water, a deaerator to remove air and other non-condensables, surge tanks and pumps. The boiler feedwater pumps produce 98 atm (1445 psia) pressure, requiring 895 kW (1200 hp) of power. Liquid hydrazine is injected into the deaerator to remove oxygen, which can pit the boiler surfaces. Ammonia, which volatizes with the steam, is added to control the pH and reduce the corrosive nature of the hot condensate. Phosphate is also added to control the formation of scale in the steam drum. The oxygen, pH and hardness control systems were designed by Badger[52] and follow conventional practice.[54] The amount of water treatment necessary depends on the incoming water quality, metallurgy of the boiler, and the ratio of makeup to condensate in the feedwater. The current system contains some redundancy; however, the control systems' costs are low compared to the replacement cost of the boiler or its components.

The power usage estimate for the baghouse cleaners (176 kW [236 hp]) was obtained from the vendor, Hamon Research-Cottrell. For the flue gas dryer and its peripherals, power requirements were scaled from an existing dryer system in a corn ethanol facility (1422 kW [1907 hp]). One Induced Draft (ID) fan was used to move the flue gas from the burner cyclone through the dryer and baghouse; this may be insufficient. Power requirements for pumps and chemical handling systems were reviewed and except for minor corrections, are unchanged. Total power for this area is 2.8 MW, or 8.5% of the total plant requirement.

Pollutant generation values were taken from information provided by FWE. Baghouse efficiency of 98.8% was taken from information supplied by the vendor. All of the emissions are below the current New Source Performance Standards (NSPS) limits[53] so no control measures other than the baghouse were added to the process.

Sulfur dioxide is generated at a rate of 0.98 kg/Whr (0.63 lb/Mbtu). All of the sulfur into the burner is converted to sulfur dioxide; 1% of the generated sulfur dioxide is converted to sulfuric acid. The presence of this acid requires that the flue gas temperature be kept above the dewpoint to avoid corrosion. Sulfur comes from wastewater treatment (hydrogen sulfide), neutralization (sulfuric acid), and is present in the cellulase and biomass entering the boiler with the centrifuge and spent biomass solids, respectively. Limestone, if it is needed to control sulfur dioxide to a stricter standard, can be purchased for about $6 per ton for quarter-inch particle size.[4] The amount of sulfur in the feed is higher than untreated biomass, but lower than most coals.

Carbon monoxide is generated at a rate of 0.31 kg/Whr (0.2 lb/Mbtu).[4] Unburned carbon in the ash is low at 1%, owing to the circulation of the unburned carbon back to the combustor bed from the cyclone.

NO_x is generated at 0.31 kg/Whr (0.2 lb/Mbtu).[4] Nitrogen oxide, or NO_x, formation is a complicated mechanism, dependent on the feed, combustion temperatures, excess air rate, burner design and the presence of other control schemes like limestone injection for sulfur dioxide control. CFBCs are generally

considered to have lower NO_x emissions due to lower combustion temperatures compared to traditional pile or grate burners.[51] The fate of the ammonia species in a burner is not well understood, but there is evidence to suggest that some of the ammonia is converted to nitrous oxide (N_2O) while also acting to reduce NO_x formation.[55] Ammonia injection has long been a means of reducing NO_x emissions. The nitrogen level in the combined feed is similar to coal when the ammonia species are included, more like untreated biomass when they are not.

II.8.3 Cost Estimation

The costs for the CFBC, turbogenerator, boiler feedwater pumps and deaerator are from vendor quotes. In addition, FWE and ABB provided scaling factor information. According to FWE, the CFBC should be scaled on steam production, but only for similar feed conditions, such as moisture content. The cost obtained from FWE compared well with a previous 1994 quote, shown in Table 16. Other quotes obtained over the last decade are also listed in this table. ABB provided scaling information based on steam entering the turbines rather than electricity generated, that represented a change in the costing methodology.

The flue gas dryer cost of $1.59M (1998$) is from an NREL report on biomass drying.[56] A belt filter press system, quoted at $1.8M (1998$) by Re-Tec[4] was investigated briefly by REI. The system, designed to reduce the solids moisture to 45%, is an alternate method to drying.

Boiler feedwater softening equipment was costed using Richardson[57], including the scaling factor. Other chemical treatment costs are from Chem Systems.[58] ICARUS[23] was used to cost the remaining equipment including pumps, heat exchanger, and surge tanks.

For the baghouse, information on bag life and replacement cost from the vendor was incorporated into the capital costs.

Table 16: Boiler Costs

Vendor/Requestor	Year	Steam Conditions Pressure/Temp	Steam Production (1000 lb/hr)	Total Cost ($MM)	Cost ($98/lb of Steam	Scope
FWEC/REI[4]	1998	915-1265 psia/950°F	752	24.9	33	CFB
FWEC/NREL [59]	1994	1515 psia/950°F	694	22.9	34.5	CFBC
Ahlstrom Pyropower/Radian[50]	1991	1515 psia/950°F	279-385	18-24	70-68	FBC
ABB/Chem Systems[60]	1990	1100 psia/875°F	434	19.8	50	Dryer/ FBC

II.9 Utilities – Area 900 (PFD-P100-A901-3)

II.9.1 Overview

This area provides all utilities required by the ethanol production facility except steam and electricity, which are provided by Area 800. The utilities provided include cooling water, chilled water, plant and instrument air, process water, and clean-in-place (CIP) solution.

Cooling water is provided to the following equipment items:

- H-200 to cool the pretreated hydrolyzate liquor before it enters the ion exchange system
- H-301 to cool the detoxified hydrolyzate slurry before it flows into the SSCF seed train
- SSCF seed train vessels to remove the heat produced in them
- H-302 to cool the detoxified hydrolyzate slurry before it flows into the SSCF production train
- F-301-5 on an as-needed basis to remove heat in the SSCF seed train
- H-300 on an as-needed basis to remove heat produced in the SSCF production train
- M-401 to cool dried air before it is sparged into the cellulase production vessels
- H-504 to condense the beer column reflux
- H-505 to condense the rectification column reflux during start-up
- M-503 to provide some cooling and condensation in the molecular sieve
- H-517 to condense vapors from the third evaporator effect
- H-602 to cool wastewater before anaerobic digestion
- M-811 to condense the remaining steam after the steam turbine.

We assumed that cooling water can be kept at 28°C for most of the year, because the average summer wet bulb temperature in the United States is 24°C, as described in Sheehan.[61]

Chilled water is provided to the cellulase seed and production vessels to cool them. Chilled water also cools the SSCF area (H-300, F-304, and F-305) when the cooling tower cannot keep the cooling water at 28°C. Both the chilled and the cooling water systems were designed and costed to handle the entire remaining SSCF cooling load after well water provides initial cooling. However, we assumed that the chilled water system needs to handle the load only 20% of the time, so we calculated the operating costs with that specification.

The plant and instrument air systems provide compressed air for plant uses (pneumatic tools and clean up) and instrument operation.

The process water system mixes fresh well water with treated wastewater and provides water at a constant pressure to the facility. Water is provided to the chip washer system, the SSCF seed production, and the scrubber, to be mixed with recycle water for dilution before SSCF and cellulase production, boiler feed water, cooling tower make-up, and the clean-in-place (CIP) system. Process water is also used throughout the facility for cleaning on an as-needed basis.

The CIP system provides solution that can be heated and include cleaning and sterilization chemicals to SSCF production and seed vessels, cellulase production and seed vessels and the distillation system.

II.9.2 Design Basis Description

The primary heat sources in this process are pretreatment, SSCF, cellulase production, distillation, wastewater treatment, and steam condensation after the turbogenerator. The cooling water system is designed at 28°C with a 9°C increase in coolers throughout the facility. We chose 28°C because the average summer wet bulb temperature[61] in the southeastern part of the United States is 25°C and a 3°C approach is a reasonable design. The chilled water system is designed at 4°C with a 4°C increase in heat exchangers utilizing chilled water.

The cellulase production bioreactors are run too cold to use cooling water, so they require chilled water year round. Overliming, distillation, wastewater treatment, and steam condensation in the boiler are hot enough to utilize cooling water year round. The initial cooling source for SSCF is well water, which enters the facility at 13°C and is heated to 26°C by the SSCF before entering the process water system. The remaining heat is removed by cooling water or chilled water. SSCF is run at 30°C so it can only be cooled with cooling water when the weather permits the cooling tower to cool the cooling water to 28°C or less. We assumed that 28°C cooling water would be available 80% of the time throughout the year, so chilled water would be required the remaining 20% of the time.

Using ASPEN, we calculated the amount of cooling tower evaporation and assumed that windage would be 0.1% of the total flow to the tower. The tower blowdown is assumed to be equal to the evaporative loss plus the windage and 90% of the blowdown is recovered to the tower.

Approximately 14,060 kW (4,000 tons) of refrigeration is required from the chilled water units to provide cooling for cellulase production and SSCF (remaining heat requirements after cooling with well water during times when the cooling tower cannot provide cool enough water). Three 7,030 kW (2,000-ton) units are specified in the plant design —two on-line with one spare.

The plant and instrument air systems provide compressed air for plant uses (pneumatic tools and clean-up) and instrument operation. Delta-T recommended 1,530 m^3/hr (900-SCFM) compressed air for plant operation. Three 875 m^3/hr (515 CFM) screw compressors were specified—two on-line with one spare. An instrument air dryer and a surge tank were designed to provide clean dry air at a consistent pressure to the instrument air system. The surge tank was sized at 3.8 m^3 (1,000 gal) to provide about 2.5 L/m^3/hr (1 gal per SCFM) of compressor capacity.

Fresh well water is used to cool the SSCF broth and is then split three ways, to provide clean water to the boiler feed water make-up system and the scrubber. The process water tank (T-914) mixes and holds the treated wastewater and the remaining fresh water before it is pumped throughout the facility. It is designed for an 8 hr. residence time. The process water pump (P-914), pumps water from the tank into the facility. It is designed to handle one-and-one-half times the process water flow requirement. Fresh process water is required by the chip washer system, SSCF seed production, and the scrubber, and fresh process water is mixed with recycle water for dilution before SSCF and cellulase production, boiler feed water, cooling tower make-up, and the CIP system.

The CIP system is designed to provide cleaning solution to all the fermentation vessels and heat exchangers, to the beer still (D-501), and to all the beer still mash heat exchangers.

Process water for tank level make-up flows into the CIP system tanks and is heated by low-pressure steam. Two CIP tanks are needed in order to maintain the ability to clean a fermentation tank at the same time as a beer still mash component.

The washing sequence follows:

1) Process water is pumped at 454 m^3/hr (2,000 gpm) (or at the equipment design flow) to the equipment being cleaned in order to flush the solids out of the equipment.
2) a. CIP solution is then pumped at 454 m^3/hr (2,000 gpm) (or at the equipment design flow) through the equipment and returned to the CIP tank via the cyclone separator.
   b. For tanks with sprayballs, CIP solution is pumped at 136 m^3/hr (600 gpm) through the sprayballs in the tank. The solution is then pumped back to the CIP tanks by the 136 m^3/hr (600 gpm) CIP return pump, via the cyclone separator.
3) The cyclone separator continuously discharges the sludge stream to the wastewater treatment area while the centrate is returned to the CIP tank for reuse.
4) The CIP cycle continues until the equipment has been cleaned.

II.9.3 Cost Estimation

We based the cooling system cost estimate on a verbal quote by Marley. It was quoted for a heat load of 148 MM Kcal/hr (587 MMBtu/hr) nd fiberglass construction for cost effectiveness and corrosion resistance. The quoted cooling tower is a 5 cell counterflow tower, 82.3 m x 16.8 m (270 ft x 55 ft) frame, 82.6 m x 18.6 m (271 ft x 61 ft) basin, with a 181 kW (243 HP) fan in each cell, and a total flow capacity of 16,125 m^3/hr (71,000 gpm). The cooling tower circulation pumps were estimated using ICARUS.[23] Their material of construction is carbon steel, chosen because of Delta T's experience.

The cost estimate for the chilled water system is for three 7,030 kW (2,000-ton) "off-the-shelf" chillers from YORK International Corp. The cost estimate includes pumps that can be used to circulate chilled water throughout the facility.

We used the Richardson manuals to estimate the plant and instrument air compressor and dryer costs [12]. The estimates are based on 125-psig rotary screw compressors and a dew point requirement of -40°C. We used ICARUS to estimate the plant air receiver tank cost as a horizontal vessel with a design pressure of 14.6 atm (200 psig).

The process water tank and pump costs were estimated using ICARUS. We estimated the tank cost using the atmospheric pressure carbon steel vertical vessel data and the pump cost using the carbon steel centrifugal pump data.

The CIP system was designed by Delta-T and the cost was estimated to be similar to the costs previously used by NREL for this system. The cost of the previous units totaled $95,000 (1995). Scaling and installation factors were estimated.

III. Process Economics

As mentioned earlier, one of the primary purposes for developing a detailed process design, model, and cost estimate is to determine the economics of ethanol production. The cost of ethanol production is used either to assess its potential in the marketplace with an absolute cost of production or to evaluate research proposals using a relative cost of production.

III.1 Analysis Procedure

The total project investment, based on total equipment cost, as well as variable and fixed operating costs, needs to be developed. With these costs, we will use a discounted cash flow analysis to determine the production cost of ethanol when the net present value of the project is zero. This section describes these three cost areas and the assumptions necessary to complete the discounted cash flow analysis.

III.1.1 Total Project Investment

Section II of this report describes the details of developing a process design and determining the purchase cost of all equipment required. The next step is to determine the installed cost of that equipment. The installation cost can be determined by a detailed study of everything required to install the required equipment and make it operational. This type of detail is not warranted for this level of estimate. When the process is much closer to construction and an estimate of +/- 5% accuracy is required for financing, more details will be necessary. This study is more of a +25%/-10% accuracy, making a "factored" approach satisfactory. Many engineering texts such as Garrett[7] or Peters and Timmerhaus[62] list installation factors that can be applied to purchased equipment costs to determine the installed cost. The ICARUS Process Evaluator[23] conducts a detailed estimate using its estimate of the piping and instrumentation required for each type of equipment. Although the ICARUS estimate is more detailed than a simple factored method, it, as well as the standard textbook factored methods, was developed for the chemical and petroleum industry, not an aqueous based biotechnology process. A better methodology is to use the actual experience that Delta-T has developed when actually installing these processes.

Delta-T reviewed the factors for direct installation costs suggested by Chem Systems[63] in its 1994 study of this process (Chem Systems in turn took these installation factors from Walas[64]) These installation factors, given in Table 17, were applied to the equipment purchased costs. The overall installation "factor" was then calculated as the quotient of the sum of all purchased costs and the sum of all installed costs, excluding sections A600 and A800. Delta-T compared this ratio (1.42) to several projects that they have actually built, where the actual ratio was 1.46. Therefore, these installation factors were accepted for most equipment except where other information, such as installation factors from vendors, was available. See Appendix B for a complete listing of the equipment, along with its purchased and installed costs.

Once the installed equipment cost has been determined from the purchased cost and the installation factor, it can be indexed to the project year being considered. In this case, we selected 1997 because the results of this work are being used in other studies that integrate these costs with petroleum costs projected by the Energy Information Administration (EIA),[65] which happens to be in 1997 dollars. The purchase cost of each piece of equipment has a year associated with it. It might be 1998, if a vendor quote was obtained in that year, or it might be 1997 if ICARUS was used as its basis. The purchased cost year will be indexed to the year of interest using the *Chemical Engineering Index*.[66] Existing values for the index ranging from

1990 to 1996 were regressed to a simple equation. The resulting equation was used to allow extrapolation to future years (known as "out years"). Table 18 gives the index as a function of date.

Table 17: Installation Factors[67]

Equipment	Multiplier*
Agitators – Carbon Steel	1.3
Agitators – Stainless Steel	1.2
Boilers	1.3
Compressors (motor driven)	1.3
Cooling Towers	1.2
Distillation columns – Carbon Steel	3.0
Distillation columns – Stainless Steel	2.1
Filters	1.4
Heat Exchangers (S&T) – CS/SS	2.1
Pumps – Lobe	1.4
Pumps – Centrifugal, Carbon Steel	2.8
Pumps – Centrifugal, Stainless Steel	2.0
Pressure Vessels – Carbon Steel	2.8
Pressure Vessels – Stainless Steel	1.7
Tanks – Field Erected, Carbon Steel	1.4
Tanks – Field Erected, Carbon Steel with Lining	1.6
Tanks – Field Erected, Stainless Steel	1.2
Solids Handling Equipment	1.2-1.4
Rotary Dryer	1.6
Turbogenerator	1.5
*Installed cost = (purchased equipment cost) x (multiplier)	

Table 18: *Chemical Engineering* Purchased Equipment Index[66]

Year	Index	Year	Index
1990	357.6	1997	384.1
1991	361.3	1998	388.5
1992	358.2	1999	392.8
1993	359.2	2000	397.2
1994	368.1	2005	418.9
1995	381.1	2010	440.7
1996	281.7		
Note: 1990 to 1996 represents actual data. Beyond 1996 were extrapolated from the earlier data.			

The total equipment cost in the year of interest has now been determined. To obtain the total project investment, we must add several other items. Chem Systems[67] proposed the categories and amounts of additional factors listed in Table 19, which summarizes these additional costs. Delta-T reviewed the items and factors and determined that they were consistent with other projects the company has completed.

Table 19: Chem Systems Additional Cost Factors[67]

Item	Description	Amount
Warehouse		1.5% of Total Equipment Costs
Site Development	Site Development: Includes fencing, curbing, parking, lot, roads, well drainage, rail system, soil borings, and general paving. This factor allows for minimum site development assuming a clear site, with no unusual problems such as right-of-way, difficult land clearing, or unusual environmental problems. 9% of the installed cost of process equipment (areas A100, A200, A300, A400, and A500).	9% of the installed cost of process equipment (areas A100, A200, A300, A400, and A500).
Prorateable Costs	This includes fringe benefits, burdens, and insurance of the construction contractor.	10% of Total Installed Cost
Field Expenses	Consumables, small tool equipment rental, field services, temporary construction facilities, and field construction supervision.	10% of Total Installed Cost
Home Office and Construction	Engineering plus incidentals, purchasing, and construction.	25% of Total Installed Cost
Project Contingency	Small because of the detail included in the process design	3% of Total Installed Cost
Other Costs	Start-up and commissioning costs. Land, rights-of-way, permits, surveys, and fees. Piling, soil compaction/dewatering, unusual foundations. Sales, use, and other taxes. Freight, insurance in transit and import duties on equipment, piping, steel, instrumentation, etc. Overtime pay during construction. Field insurance. Project team. Transportation equipment, bulk shipping containers, plant vehicles, etc. Escalation or inflation of costs over time. Interest on construction loan.	10% of Total Capital Investment

Table 20 summarizes the Total Equipment Cost. Table 21 illustrates the application of factors in Table 19 to obtain the Total Project Investment.

Table 20: Total Installed Equipment Costs

Process Area	Capital Cost
Feed Handling	$4,900,000
Pretreatment/Detox	$26,300,000
SSCF	$13,400,000
Cellulase Production	$15,500,000
Distillation	$13,000,000
WWT	$10,400,000
Storage	$1,800,000
Boiler/Turbogen	$44,500,000
Utilities	$5,200,000
Total Equipment Cost	$135,000,000
Model R9906A 1997$	

Table 21: Total Project Investment	
Total Equipment Costs (Table 20)	$135,000,000
Warehouse	$2,000,000
Site Development	$6,600,000
Total Installed Cost	$143,600,000
Indirect Costs	
Field Expenses	$28,700,000
Home Office & Construction Fee	$35,900,000
Project Contingency	$4,300,000
Total Capital Investment	$212,500,000
Other Costs	$21,300,000
Total Project Investment	$233,800,000
Model: R9906A, 1997 $	

III.1.2 Variable Operating Costs

Variable operating costs, which include raw materials, waste handling charges, and by-product credits, are incurred only when the process is operating. All raw material quantities used and wastes produced were determined using the ASPEN mass and energy balance model. Appendix C documents the sources of the costs of these items. Eventually, the documentation of raw material costs will be stored in the Process Basis database and linked to the economic model. The ASPEN mass and energy balance also calculates the gallons of ethanol produced. Therefore, each raw material's contribution to the cost of a gallon of ethanol can be determined. Table 22 summarizes these costs.

As with capital equipment, the costs for chemicals are associated with a particular year. To index the costs from the year in which they were obtained to the year the analysis is being performed, we use the Inorganic Chemical Index[68] from SRI Consulting. Data for this index were available for years 1980 through 1996. These data were regressed to a simple equation and used to extrapolate to other years, as shown in Table 23.

Table 22: Variable Operating Costs

Raw Material	kg/hr	Cost ($/lb)	MM$/yr	¢/Gal Ethanol
Biomass Feedstock*	159,948	0.006513	19.31	37.0
Sulfuric Acid	1,867	0.012	0.41	0.8
Lime	714	0.0335	0.44	0.9
Ammonia	1,419	0.0837	2.20	4.3
Corn Steep Liquor	1,977	0.072	2.63	5.1
Nutrients	174	0.132	0.43	0.8
Ammonium Sulfate	392	0.02	0.16	0.3
Antifoam (Corn Oil)	227	0.2412	1.01	2.0
Diesel	443	0.0588	0.48	0.9
Make-up Water	186,175	0.00013	0.45	0.9
BFW Chemicals	0.5	1.03	0.01	0.0
CW Chemicals	5	1.00	0.10	0.2
WWT Nutrients	230	0.11	0.45	0.9
WWT Chemicals	0.76	2.39	0.03	0.1
Ash Disposal	1,106	0.01	0.19	0.4
Gypsum Disposal	2,433	0.01	0.42	0.8
Electricity Credit	-10,942(kW)	0.04	-3.68	-7.2

Note: * $25/bone dry U.S .ton, costs are 1996 $
Model: R9906A
See Appendix C for more details.

Table 23: Inorganic Chemical Index[68]

Year	Index	Year	Index
1982	100	1993	108.9
1983	95.1	1994	110.4
1984	94.3	1995	117.2
1985	96.7	1996	119.5
1986	95.3	1997	119.0
1987	94.5	1998	120.8
1988	100.9	1999	122.5
1989	108.9	2000	124.2
1990	111.7	2005	131.2
1991	112.5	2010	140.0
1992	109.8		

Note: 1990 to 1996 represents actual data.
Beyond 1996 were extrapolated from the earlier data.

III.1.3 Fixed Operating Costs

Fixed operating costs are generally incurred whether or not the plant is producing at full capacity. These costs include labor and various overhead items. Delta-T recommended information on fixed operating costs using data from similar ethanol plant projects the company has been involved with (ranging up to 230 million L [60 million gal] annual production), as well as the standard reference of Peters and Timmerhaus.[62] Table 24 contains the Delta-T recommendation.

Salaries do not include benefits; they are covered in the general overhead category. General overhead is a factor of 60% applied to the total salaries and covers items such as safety, general engineering, general plant maintenance, payroll overhead (including benefits), plant security, janitor and similar services, phone, light, heat, and plant communications.

Annual maintenance materials, based on the same experience, were estimated as 2% of the total equipment cost as shown in Table 20. Additionally, insurance and taxes were estimated at 1.5% of the total installed cost using both Delta-T's in-house information and published information (Table 21).

It is important to note that the estimates provided for this section are based on a representative Midwest U. S. basis. The estimates can vary based on specific location.

Table 24: Fixed Operating Costs

	Salary of Factor	Number	Total Cost	
Plant Manager	$80,000	1	$80,000	
Plant Engineer	$65,000	1	$65,000	
Maintenance Supervisor	$60,000	1	$60,000	
Lab Manager	$50,000	1	$50,000	
Shift Supervisor	$37,000	5	$185,000	
Lab Technician	$25,000	2	$50,000	
Maintenance Technician	$28,000	8	$224,000	
Shift Operators	$25,000	20	$500,000	
Yard Employees	$20,000	8	$160,000	
General Manager	$100,000	1	$100,000	
Clerks & Secretaries	$20,000	5	$100,000	
Total Salaries (1998 $)			$1,574,000	
Total Salaries (1997 $)			$1,532,000	
Overhead/Maintenance	60%		$944,000	Of labor and supervision
Maintenance	2%		$2,701,000	Of equipment cost
Insurance & Taxes	1.5%		$2,154,000	Of total installed cost
Model: R9906A, 1997 $				

The salaries are on a 1998 basis and will need to be indexed to other cost years when appropriate. The index to adjust these costs is taken from the Bureau of Labor Statistics[69] and is given in Table 25. As with the other indexes, data were available only up until 1996. The available data were regressed to a simple equation. The resulting regression equation was used to extrapolate to out years.

Table 25: Labor Index[69]

Year	Index	Year	Index
1980	8.3	1992	14.51
1981	9.12	1993	14.82
1982	9.96	1994	15.13
1983	10.58	1995	15.62
1984	11.07	1996	16.17
1985	11.56	1997	16.72
1986	11.98	1998	17.17
1987	12.37	1999	17.63
1988	12.71	2000	18.08
1989	13.09	2005	19.90
1990	13.54	2010	22.18
1991	14.04		

Note: 1990 to 1996 represents actual data. Beyond 1996 information was extrapolated from the earlier data.

III.1.4 Discounted Cash Flow Analysis and the Selling Cost of Ethanol

Once the major three cost areas have been determined—(1) total project investment, (2) variable operating costs, and (3) fixed operating costs—a discounted cash flow analysis can be used to determine the minimum selling price per gallon of ethanol produced. The discounted cash flow analysis will iterate on the selling cost of ethanol until the net present value of the project is zero. This analysis requires that a discount rate be set. In addition, the depreciation method, along with income tax rates, plant life, construction, and start-up duration, will need to be determined. For this analysis, we assumed that the plant would be 100% equity financed. This, along with other financial assumptions made here, is subject to change for a specific project. For this analysis these parameters were chosen to be representative, but certainly not the final word in project financing.

The discount rate for this project is 10%. This rate was selected based on the recommendation by Short et al.[70] in his description of how to perform economic evaluations of renewable energy technologies for DOE. His view is that "In the absence of statistical data on discount rates used by industrial, transportation and commercial investors for investments with risks similar to those of conservation and renewable energy investments, it is recommended that an after tax discount rate of 10%…" be used.

To determine the depreciation amount for the calculation of federal taxes to be paid, Short et al.[71] recommends the use of the IRS Modified Accelerated Cost Recovery System (MARCS). Within the MARCS system is the General Depreciation System (GDS), which allows both the 200% and 150% declining balance (DB) methods of depreciation. This offers the shortest recovery period and the largest tax deductions. IRS publication 534 (IRS 1993) indicates that steam production plants should use a 20-year recovery period. The IRS indicates that other property not specifically described in the publication should be depreciated using a 7-year recovery period. Short et al.[72] indicates that property listed with a recovery period less than 10 years should use the 200% DB depreciation method and that a 20-year recovery period property should use the 150% DB depreciation.

State taxes are not considered, primarily because the location of the plant has not been determined and tax rates vary quite drastically, from 0% to 12%. Short et al.[70] suggests using the highest federal tax bracket, which is 39% for large corporations.

The construction time is important to the cash flow analysis because there is generally no income during construction and because huge sums of money are being expended. Perry and Green[73] indicate that small projects (less than $10 million investment) can be constructed in fewer than 18 months and that larger projects can take up to 42 months. An overview[74] of petroleum refining economics indicates that large refineries (of the order of $1.5 billion investment) can be constructed in 24 months. Certainly this process is much smaller than the refinery, so using a construction time of 24 months is conservative and fits within these references. Delta-T's experience with grain-to-ethanol plants indicates that it will require a little more than 2 years to complete a project of this size. An important difference between this type of facility and a refinery are the large number of field-erected vessels in this process. Their on-site construction in very close proximity to each other will cause the construction time to be a little longer. Table 26 summarizes the schedule for construction and the cash flow during that time.

Table 26: Construction Activities and Cash Flow

Project Start Month	Project End Month	Activity Description	% of Project Cost
0	6	Project plan and schedule established, conceptual and basic design engineering, permitting completed. Major equipment bid packages issued, engineering started on selected sub-packages, P&ID's complete, preliminary plant and equipment arrangements complete.	8.00%
6	18	All detailed engineering including foundations, structure, piping, electrical, site, etc. complete; all equipment and instrument components purchased and delivered; all site grading, drainage, sewers, rail, fire pond, foundation, and major structural installation complete; 80% of all major process equipment set (all except longest lead items), all field fabricated tanks built, and the majority of piping and electrical materials procured.	60.62%
18	30	Complete process equipment setting, piping, and instrumentation installation complete; all electrical wiring complete; all building finishing and plumbing complete; all landscaping complete; pre-commissioning complete; and commissioning, start-up, initial performance test complete.	31.38%
		TOTAL	100.00%

Notes:
1. The above presumes no utility or process equipment orders placed prior to month 7.
2. Expenditures based on typical 60 MM gal/yr grain-to-ethanol facility.

Perry and Green[73] indicate that for a moderately complex plant start-up should be about 25% of the construction time or 6 months, in this case. Delta-T's experience with start-up demonstrates that a large

grain-to-ethanol plant could be started in less time, but this is more complex than a grain ethanol plant. Considering that this design is for the "nth" operating plant, we assumed a start-up time of 6 months. The start-up period is not completely wasted, however. We expect that an average of 50% production could be achieved during that period with about 75% expenditure of variable expenses and 100% of fixed expenses. Certainly some start-up activities will also occur during construction. One of the additional cost factors accounts for additional man power to begin equipment testing and other start-up activities before construction is complete (see Table 19).

Working capital is money available to handle (1) raw materials and supplies in inventory, (2) finished product in storage, (3) accounts receivable, (4) cash on hand for monthly payments, (5) accounts payable, and (6) taxes payable. Peters and Timmerhaus[62] indicate that this is usually 10%-20% of the capital investment. For this project, even 10% would be about $22 million. One month's supply of raw materials and product inventory is only about $2 million. Therefore, a lower number of 5% or about $10 million is more reasonable.

Table 27 summarizes the parameters used in the discounted cash flow analysis.

Table 27: Discounted Cash Flow Parameters

Plant Life	20 years
Discount Rate	10%
General Plant Depreciation	200% DB
General Plant Recovery Period	7 years
Steam Plant Depreciation	150% DB
Federal Tax Rate	39%
Financing	100% equity
Construction Period	2.5 years
1st 6 Months Expenditures	8%
Next 12 Months Expenditures	61%
Last 12 Months Expenditures	31%
Working Capital	5% of Total Project Investment
Start-Up Time	6 months
Revenues	50%
Variable Costs	75%
Fixed Costs	100%

Using the discounted cash flow parameters in Table 27, plus the cost information in Tables 21, 22, and 24, the resulting cost of pure ethanol is $1.44/gal (see Table 28 and Appendix D). Using the capital cost estimate margin of +25%/-10%, the impact on the cost of ethanol would be a low of $1.36/gal and a high of $1.64/gal.

Table 28: Near-Term Base-Case Results Summary

Production Cost of Ethanol	$1.44 /gal (+$0.20/-$0.08)
Ethanol Yield	68 gal/ton
Ethanol Production	52.2 MM gal/yr
Total Project Investment (Capital)	$234 MM
Note: 1997 $ Model: R9906A	

The $1.44/gal can be further broken down into the cost of each process area. Figure 16 illustrates the contribution to the overall cost by process area and capital, operations, and fixed costs.

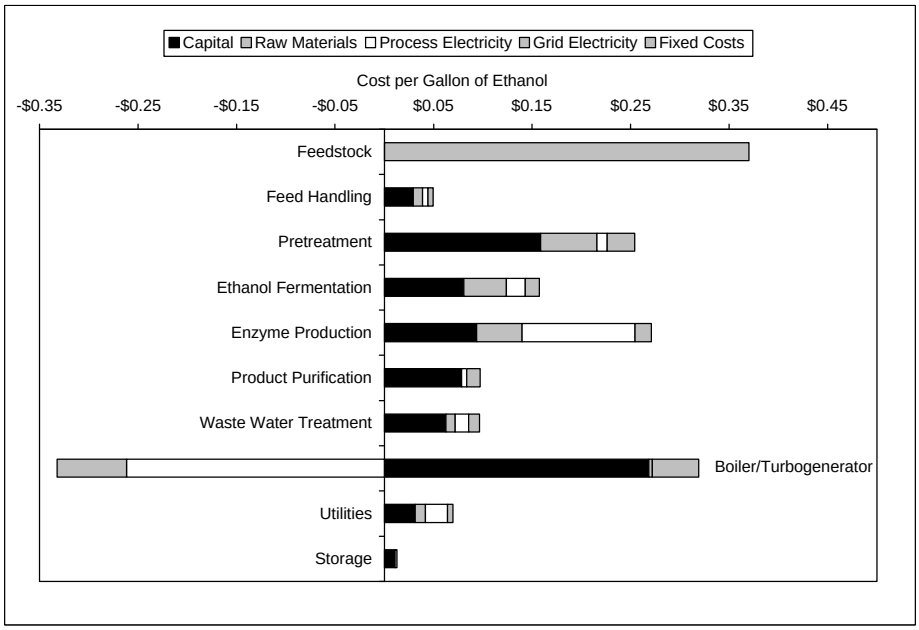

Figure 16: Cost Contribution Details From Each Process Area

IV. Futuristic Cases

The cost of ethanol as determined in the previous section was derived using technology that has been developed or is currently close to completion. We expect that if a plant were to begin detailed engineering today, the expected costs would be as developed in Sections II and III. This cost is probably still a little high for a company to start constructing a grass roots plant based on this technology. Plants that are being engineered today all have some niche that allows them a special advantage in the short term for a small market segment. This could be feedstock costs (very low or negative for environmental wastes), used equipment (making use of related equipment that has been shut down), co-location with existing facilities (biomass burners and waste treatment facilities), or a combination of these. It is not expected that grass roots, large-scale cellulosic biomass-to-ethanol plants will be built for several more years. To help plan for those activities it is beneficial to explore the anticipated costs of producing ethanol in those out years. These futuristic costs are based on the expected results from continued research. The following sections introduce the ongoing research, its expected outcomes, and the economic result expected when that work is complete.

IV.1 Future Technology Pathways for Cost Reduction

The cost reductions shown in Figure 17 (on page 63) and discussed in the following sections for each out year case are based on the Biofuels Program's latest multi-year technical plan. The strategies for

technology improvement as laid out in this plan are described in more detail elsewhere.[75] They are described briefly here for each major aspect of the conversion technology.

IV.1.1 Cellulase Enzyme Development

Because of the importance of cellulase enzymes in the process, DOE and NREL sponsored a series of colloquies[76] with experts and stakeholders in industry and academia. These dialogues were designed to determine what types of improvements in enzyme production and performance offer the greatest potential for success in the short term. There was a clear consensus in these discussions that the prospects for enzyme improvement through protein engineering are very good. We identified the following targets for protein engineering:

- *Increased Thermal Stability*. Simply by increasing the temperature at which these enzymes can operate, we can dramatically improve the rate of cellulose hydrolysis. The genetic pool available in our labs and in others around the world include thermotolerant, cellulase-producing organisms that represent a good starting point for engineering new enzymes.
- *Improved Cellulose Binding Domain*. Cellulase enzymes contain a catalytic domain and a binding domain. Improvements in the latter will lead to more efficient interaction between the soluble cellulase enzymes and the insoluble surface of the biomass.
- *Improved Active Site*. In addition to modifying the binding domain, we plan to modify amino acid sequences at the active site. Even minor modifications of the enzyme can lead to dramatic improvements in its catalytic activity.
- *Reduced Non-Specific Binding*. Enzyme that adsorbs on lignin is no longer available for hydrolysis. Genetic modifications of the enzyme will be geared toward adjusting its surface charge to minimize such unwanted binding.

We have identified two approaches for achieving these goals, both representing the state–of–the-art in biotechnology research. The first is a rational design approach known as site-directed mutagenesis. It uses sophisticated 3-D modeling tools to identify specific amino acids in the protein sequence that can affect the enzyme properties listed above. The second, more recent strategy is known among biotechnologists as "directed-evolution." It combines advanced genetic engineering techniques with highly automated laboratory robotics to randomly evolve new enzymes with the features required. The enzyme performance goals that are indicated in the future cases are based on the projected progress for these research strategies. By 2005, improvements in thermostability of the enzymes should yield a three-fold improvement in specific activity. By 2010, enhancements in the cellulose binding domain, the active site, and the protein surface charge will lead to an increase in enzyme performance of ten-fold or more.

In parallel with the protein engineering work, our program plan calls for research aimed at improving the productivity of the enzyme expression systems. This includes:

- Developing microbial organisms for high productivity of enzymes
- Genetically engineered crops that contain high levels of cellulase enzymes harvested as feedstock

Developing improved organisms for enzyme production relies on industrial expertise and support, rather than on research actually carried out within the program. Higher efficiency microorganisms for use in submerged culture fermenters should be available by 2005. Work on genetically engineered crops is in the early stages of evaluation only. First, we need to establish the feasibility and potential benefits of producing enzymes in plants.

IV.1.2 Fermentation Organism Development

Research in the past 10 years on ethanol-producing microorganisms has yielded microorganisms capable of converting hexose and pentose sugars to ethanol. These ethanol-producing microorganisms ferment xylose and glucose mixtures to ethanol with high efficiency. This represents a major advance in technology, as previous conversion of pentose sugars by natural yeasts was not industrially attractive. Furthermore, these new ethanologens have eliminated the need for separate pentose and hexose fermentation trains.

Substantial improvement in biomass conversion can be achieved by making the following additional improvements in ethanol-producing microorganisms:

- Ethanol-producing microorganisms capable of producing 5% ethanol at temperatures greater than or equal to 50°C
- Ethanol-producing microorganisms capable of converting cellulose to ethanol.

We have recently shown that a doubling of the rate of biomass hydrolysis for every 20°C increase in temperature of saccharification can be expected if *T. reesei*-like cellulases are used. The development of ethanologens capable of fermentation at temperatures greater than 50°C can potentially reduce the cost of cellulase enzyme by one-half. This is because the current ethanologens can only meet desired performance at temperatures of 30°-33°C.

The most advanced processing option is one in which all biologically mediated steps (e.g., enzyme production, enzymatic cellulose hydrolysis, and biomass sugar fermentation) occur in a single bioreactor. This process, also known as direct microbial conversion (DMC) or consolidated bioprocessing (CBP), can be carried out to various extents by a number of microorganisms, including fungi, such as *Fusarium oxysporum* and bacteria, such as *Clostridia sp*. However, known DMC strains often exhibit relatively low ethanol yields and have not yet been proven effective in handling high concentrations of biomass.

Our program plan calls for introducing a high-temperature ethanologen by 2005. This new organism should be able to operate at 50°C, while maintaining the best characteristics of the current ethanologens.

IV.1.3 Process Development and Integration

The cellulase enzymes and the fermenting organisms are the major thrusts of our applied research efforts. Integrating these into a complete process is critical to commercial success. Pilot and bench scale optimization of an integrated process is expected to lead to improvements such as:

- Optimal yields and operating conditions for the co-current pretreatment step
- Optimal yields and operating conditions for the simultaneous saccharification and co-fermentation step
- Testing of improved organisms and enzymes as they become available

An optimized and integrated process using cellulase enzymes and co-current pretreatment technology should be available by 2005.

IV.1.4 Long-Term Potential for Agricultural Biotechnology

Although still in its early stages, research on genetic engineering of agricultural crops holds great promise. We anticipate the need for a focused research effort to develop energy crops that contain higher levels of carbohydrates. Increased carbohydrate content provides a direct improvement in ethanol yield. Because the details of a research program targeted at higher carbohydrate content have not been worked out, we look at this as a long-term improvement. In our analysis, the fruits of such a research program are reflected in our year 2015 case study.

IV.2 Economics of Futuristic Cases

Having reviewed the technology pathways for improving the production of ethanol, we can now apply those plans to the process design and economic model to quantify the expected results in the cost of ethanol. Using the model developed in the previous sections (the base case), we can make adjustments to the model to accommodate the improved technology described above. Years chosen for analysis are 2005, 2010, and 2015. Other investigators[77] are exploring the costs of ethanol production in years beyond that. Table 29 summarizes the changes to key parameters in the model and the resulting cost of ethanol.

Table 29: Out Year Parameter Changes

Process Area	Parameter	Base Case	Best of Industry	Year 2005	Year 2010	Year 2015
Cost $/gal		$1.44	$1.16	$0.94	$0.82	$0.76
Feedstock	Cellulose Fraction	42.67%	42.67%	42.67%	42.67%	51.20%
	Xylan Fraction	19.05%	19.05%	19.05%	19.05%	22.86%
	Arabinan Fraction	0.79%	0.79%	0.79%	0.79%	0.95%
	Mannan Fraction	3.93%	3.93%	3.93%	3.93%	4.72%
	Galactan Fraction	0.24%	0.24%	0.24%	0.24%	0.29%
	Lignin Fraction	27.68%	27.68%	27.68%	27.68%	14.34%
Pretreatment	Reactor Residence Time (min)	10 min	8 min	8 min	8 min	8 min
	Acid Concentration	0.5%	1.5%	1.5%	1.5%	1.5%
	Temperature (°C)	190	150	150	150	150
	Xylan to Xylose Yield	75%	85%	85%	85%	85%
	Mannan to Mannose Yield	75%	85%	85%	85%	85%
	Galactan to Galactose Yield	75%	85%	85%	85%	85%
	Arabinan to Arabinose Yield	75%	85%	85%	85%	85%
	Type of Conditioning	IX/OL	IX/OL	OL only	OL only	OL only
Enzy. Prod.	Enzyme Loading for SSCF	15 FPU/g	15 FPU/g	15 FPU/g	20 FPU/g	20 FPU/g
	Yield (FPU/g Cellulose+Xylose)	200	200	600	2000	2000
	Productivity (FPU / L • hr)	75	200	600	2000	2000
	Aeration (VVM)	0.577	0.577	0.29	0.29	0.29
SSCF	Residence Time	7 days	7 days	3.5 days	2 days	2 days
	Cellulose to Glucose Yield	80%	80%	80%	90%	90%
	Glucose to Ethanol Yield	92%	92%	92%	95%	95%
	Xylose to Ethanol Yield	85%	85%	85%	95%	95%
	Arabinose to Ethanol Yield	0%	85%	85%	95%	95%
	Galactose to Ethanol Yield	0%	90%	90%	95%	95%
	Mannose to Ethanol Yield	0%	90%	90%	95%	95%
	Temperature (°C)	30	30	55	55	55
	Chilled Water Fraction	20%	20%	0%	0%	0%
	Contamination Loss	7%	7%	5%	3%	3%
Utilities	Biomass to Burn Flow (dry kg/hr)	0	0	0	0	11,000
	Biomass to Burn (dry ton/day)	0	0	0	0	275
	On-line Time (hr/yr)	8,406	8,406	8,406	8,406	8,478

IV.2.1 Near-Term, Best of Industry

Technologies in addition to that developed by NREL are available to the project developer. Specifically, it is thought that pretreatment can produce higher conversions of hemicellulosic sugars[78] and that the current cellulase industry could provide a microorganism to produce the enzyme more efficiently[76]. Also, it is known that there are other ethanologens[79] that will ferment the other hemicellulose sugars (arabinose, galactose, and mannose) to sugar. These improvements have been incorporated into the model (see Table 29). The result of this scenario is a reduction in the cost of ethanol production to $1.16/gal (+$0.15/-$0.06).

Table 30: Near Term, Best of Industry Improvements from Base Case

Production Cost of Ethanol Reduced	from $1.44 /gal to $1.16/gal (+$0.15/-$0.06)
Yield Increased	12% to 76 gal/ton
Production Increased	12% to 58.8 MM gal/yr
Capital Reduced	12% to $205 MM
Note: 1997 $ Model: R9906B	

IV.2.2 Future Case, Year 2005

We expect that continued research in the pretreatment area (A200) will lead to higher yields of xylose (hydrolysis of hemicellulose). This will be accomplished with lower temperatures, shorter residence times, and higher acid concentrations and will reduce the capital cost of the pretreatment reactors. We also anticipate that adapting the fermenting organism to function in the untreated hydrolyzate will eliminate the need for ion exchange removal of acetic acid. This will further reduce the capital by eliminating ion exchange and liquid/solid separating equipment.

In the fermentation area, we expect that the fermenting organism will be able to withstand a higher temperature. This will lead to increased fermenting kinetics, but more importantly increased enzymatic saccharification kinetics. These faster kinetics will reduce the SSCF residence time, reducing capital costs. This higher temperature will also reduce the contamination, as fewer competing organisms will be able to survive at these temperatures. Finally, the higher temperature will eliminate the need for any chilled water (currently used for part of the year) in this area. Table 31 lists the improved results in the year 2005.

Cellulase enzyme activity in the SSCF fermenters will be improved by a factor of three times. This will reduce the need for enzyme production by that same amount, saving considerable capital. It is also expected that the new expression system used to grow the enzyme will require less air, thus reducing the need for air compression and capital cost.

The wastewater treatment area capital cost is also reduced, because ion exchange detoxification is eliminated. The ion exchange process has a large stream of organics from the regeneration of the resin. Without the ion exchange these organics ultimately end up in the syrup, which is sent to the burner and not to waste treatment.

Table 31: Year 2005 Improvements from Best of Industry

Production Cost of Ethanol Reduced	from $1.16 /gal to $0.94/gal
Yield Increased	7% to 81 gal/ton
Production Increased	7% to 62.2 MM gal/yr
Capital Reduced	18% to $169 MM
Note: 1997 $ Model: R9906C	

IV.2.3 Future Case, Year 2010

The overall improvements by the year 2010 are summarized in Table 32. We expect that the yields of other hemicellulosic sugars (galactose, mannose, and arabinose) will be optimized in area A200 as a result of adjusting reactor conditions. The yield optimization will not directly affect the equipment costs.

In area (A300) an increased enzyme loading will result in a further reduction of the residence time in the SSCF fermenters. This increased enzyme load will also result in higher glucose yields. The fermenting organism will be optimized to increase the yields of ethanol and decrease contamination.

The cellulase enzyme activity will continue to be improved with a ten-fold improvement over that used in the base case. With such greater enzyme activities and subsequent reductions in the per gram cost of enzyme protein, it will be economical to increase the enzyme loading in the SSCF reactor to increase the conversion of cellulose to glucose.

At this point, the amount of boiler fuel is insufficient to meet the steam and electric demands of the process. Steam must be throttled from higher pressures to satisfy the heat demands of the process, lowering the amount of electricity produced. This is done rather than purchasing ancillary fuel to satisfy the steam demand and generating more excess electricity.

Table 32: Year 2010 Improvements from Year 2005 Case

Production Cost of Ethanol Reduced	from $0.94/gal to $0.82/gal
Yield Increased	16% to 94 gal/ton
Production Increased	16% to 72.2 MM gal/yr
Capital Reduced	8% to $156 MM
Note: 1997 $ Model: R9906D	

IV.2.4 Future Case, Year 2015

By this time frame, we anticipate that the impacts of plant biotechnology improvements to the feedstock will begin to be realized. We are using a 20% carbohydrate increase as a model for the improvements achieved. As in the 2010 case, when more of the feedstock is converted to ethanol less boiler fuel will be available. In this case more biomass feedstock will need to be supplied directly to the boiler as fuel. Again, steam is throttled from higher pressures so that no excess electricity is generated and the minimum amount of feedstock is burned in the boiler.

Table 33: Year 2015 Improvements from Year 2015 Case

Production Cost of Ethanol Reduced	from $0.82 /gal to $0.76/gal
Yield Increased (Biomass to Plant)*	5% to 99 gal/ton
Yield Increased (Biomass to Ethanol)	19% to 112 gal/ton
Production Increased	21% to 87.5 MM gal/yr
Capital Reduced	-2% to $159 MM

Note: 1997 $
Model: R9906E
* There is now a shortage of waste fuel for process steam and feedstock must be burned to generate process steam.

IV.3 Summary of Futuristic Cases

The prospects for the future of producing ethanol from cellulosic biomass are very positive. Figure 17 shows the future reduction in ethanol production cost that will result from the continued research outlined in the previous sections. The cost of ethanol, with a feedstock cost of $25/dry U.S. ton will be reduced from about $1.16/gal (near-term best of industry) to about $0.76 by the year 2015—a reduction of 34%. Considering only the cost of converting the biomass feedstock, the cost in the near term is about $0.83/gal ($1.16/gal, less $0.33/gal for the biomass feedstock). In 2015, the cost of conversion will be only $0.51/gal ($0.76/gal, less $0.25/gal for the biomass feedstock).

The following figures show this reduction in cost over time. Figure 18 breaks the costs down into the contribution for capital, fixed, and operating costs.

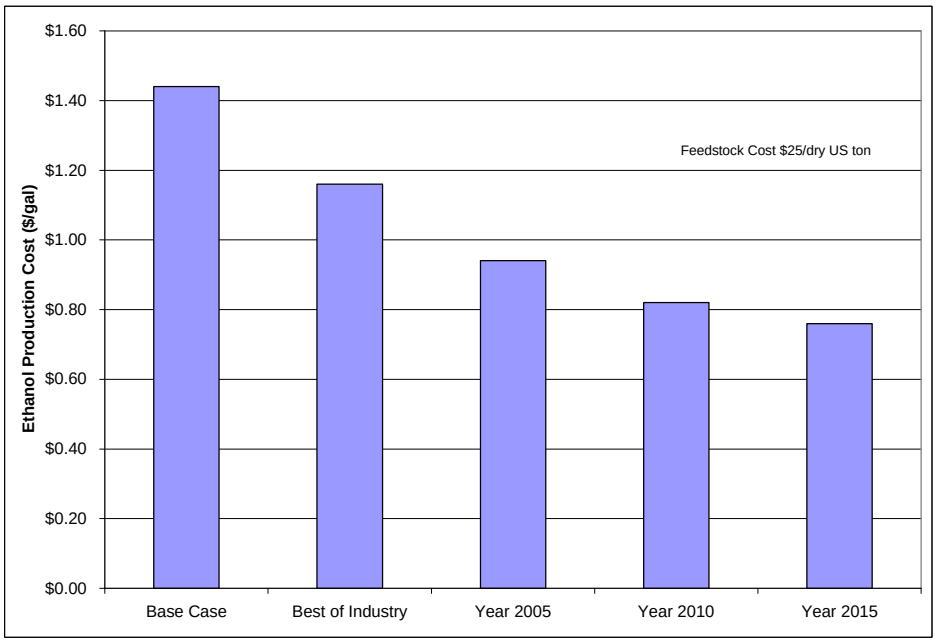

Figure 17, Future Projection of the Cost of Ethanol Production from Cellulosic Biomass

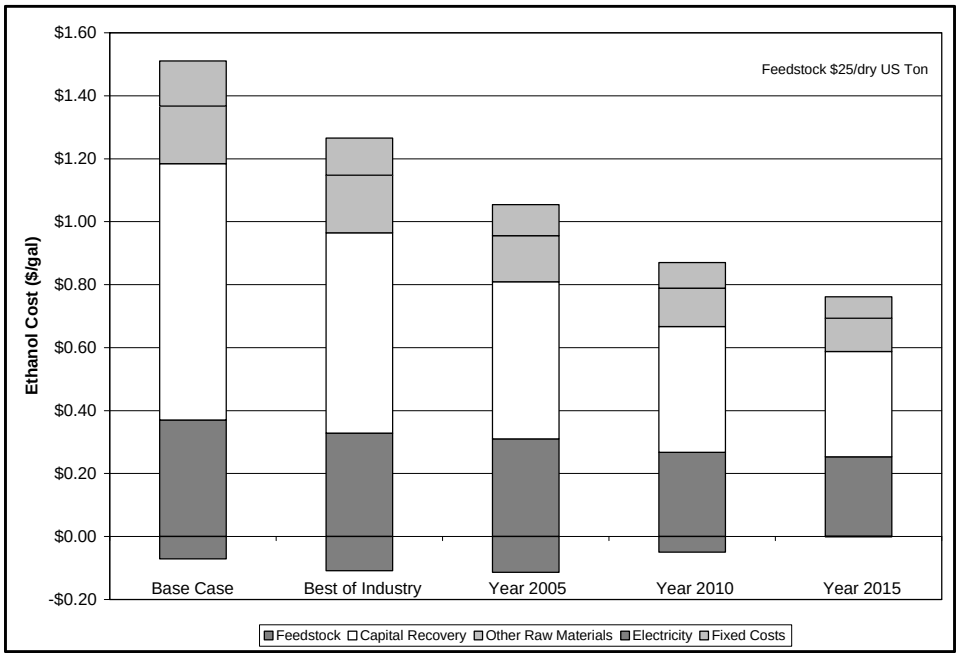

Figure 18, Cost Breakdown of Current and Future Cases

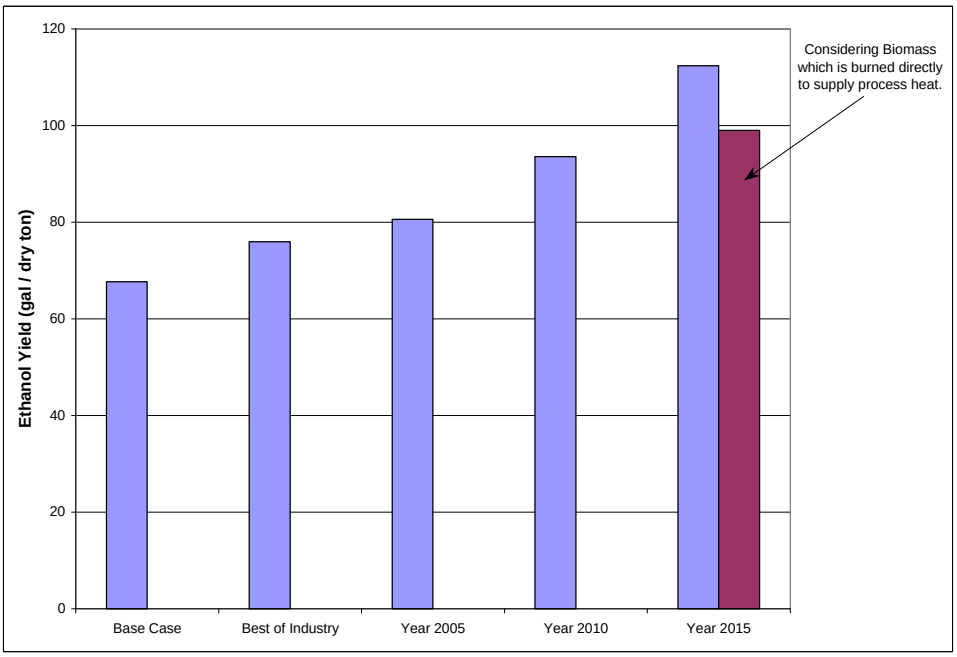

Figure 19, Ethanol Yield Improvements with Continued Development

During this time the yield of ethanol from feedstock will be increased (see Figure 19), as a result of better conversion in prehydrolysis (pretreatment), in enzymatic hydrolysis, and in actual fermentation of the

available sugars to ethanol. Also, as the activity of the enzyme is improved, less sugars will be diverted to enzyme production. The process requires steam and electricity to operate, and the fuel to generate both is generally available in the unreacted carbohydrate and lignin. When both of these are reduced, as is the case in 2015, it is possible that they can no longer meet the energy (steam and electricity) demands of the process. In this case additional fuel would be required. Because there is already a biomass burner in the plant (to burn the lignin) and because biomass is the cheapest source of energy, it could be burned directly to supply the process energy required. If this additional biomass is considered, the overall yield is lowered to about what it was in 2010.

The capital cost will be reduced as the technology is improved, as shown in Figure 18. Capital costs will be reduced by decreasing the pretreatment temperatures, removing the hydrolyzate conditioning equipment, reducing the demand for enzyme (because of its greatly increased activity), and reducing the enzyme hydrolysis time (which subsequently reduces SSCF vessel size).

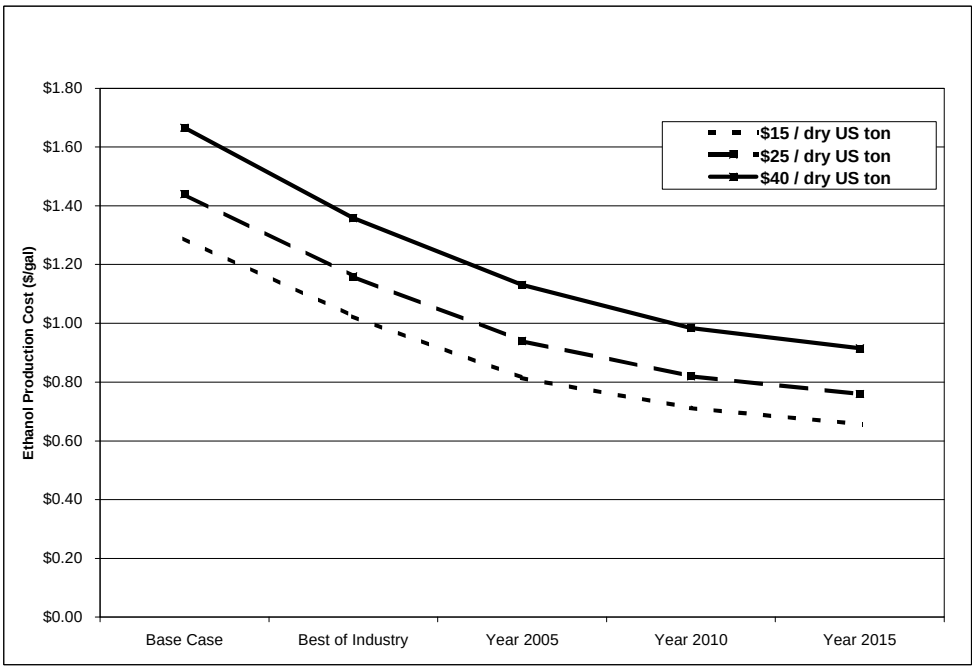

Figure 20, Future Projection of the Cost of Ethanol as a Function of Feedstock Cost

As mentioned earlier, DOE funds ORNL to project the cost of feedstocks, so only a sensitivity of the cost of ethanol to the feedstock cost will be given. Figure 20 illustrates the sensitivity of feedstock and the general reduction in the cost of ethanol production over the next several years. In the near term, at $25/dry U.S. ton, the contribution to the ethanol cost from feedstock is $0.33/gal. Yield improvements will reduce this cost to $0.22/gal by 2015. If the feedstock is more or less expensive, the contribution to the ethanol cost will be correspondingly affected.

V. Improvements and Extension to the Model Planned or Currently Under Way

The process design and economic model that we have described here is not a static tool. The information contained in the model will be continually improved, but the scope of technologies and the capabilities for calculation will also be expanded. The following gives a brief overview of the work currently going on or planned for the next year or so.

V.1 Enzyme Production Optimization

The preliminary investigation of using pure oxygen or enriched air for cellulase production was very encouraging. More work needs to be done to better determine the oxygen plant costs and to assess whether using oxygen or some oxygen mixed with air is the most cost-effective method of providing oxygen to the cellulase fermenters.

In addition, investigations will continue regarding the general design and costs of these fermenters giving consideration to the current state-of-the-art for large-scale aerobic fermentations.

V.2 Pretreatment Reactor Costs

The pretreatment reactor presents the largest uncertainty in capital costs. Delta-T had considerable difficulty obtaining quotations and assistance from vendors of this equipment. NREL plans to continue this work by developing a more detailed description of the needs and experimental work that has been performed on this equipment at NREL and elsewhere. Then, working with experienced engineers in the pulp and paper industry, we will attempt to buy design and costing information from equipment vendors. With this approach, we hope that within a year we will have better cost information on this very expensive piece of equipment.

V.3 Liquid Solid Separations Costs

Another area of concern is the liquid solid separations. Delta-T was able to get vendor quotations in this area, but the data on which those estimates were based were very minimal. NREL hopes to work with TVA and engineering firms to develop more data and subsequently more definitive cost information.

V.5 Lignin Gasification and Gas Turbine Power Generation

Another alternative to simply burning the lignin to generate steam and subsequently power generation is to gasify the lignin and use a gas turbine to generate power generation and subsequent steam generation. This technology is currently being pursued by the DOE Biomass Power Program for use on biomass feedstock. The current base case will be modified to incorporate this technology so that a comparison can be made between it and conventional lignin combustion.

[1] "Wastewater Treatment Options for the Biomass-To-Ethanol Process," NREL Subcontract AXE-8-18020-01, Merrick & Company, Aurora, CO, February 24, 1998.

[2] "Steam and Electricity Generation Options For the Biomass-To-Ethanol Process," NREL Subcontract ACO-8-18019-01, Reaction Engineering International, Salt Lake City, UT, March 16, 1998.

[3] "Wastewater Treatment Options for the Biomass-To-Ethanol Process," NREL Subcontract AXE-8-18020-01 Final Report, Merrick & Company, Aurora, CO, October 22, 1998.

[4] "Energy Analysis of Biomass-to-Ethanol Processes", NREL Subcontract ACO-8-18019-01 Final Report, Reaction Engineering International, Salt Lake City, UT, February 1999.

[5] *ASPEN Plus™, Release 9.2-1*, Aspen Technology, Inc., Cambridge, MA, October 1995.

[6] Wooley, R.J. and V. Putsche, *Development of an ASPEN PLUS Physical Property Database for Biofuels Components*, NREL, Golden, CO, Report MP-425-20685, April 1996.

[7] Garrett, D.E., *Chemical Engineering Economics*, Van Nostrand Reinhold, New York, 1989.

[8] Graham, R.L., L. J. Allison and D.A. Becker, "The Oak Ridge Energy Crop County Level Database," December 20, 1996. Available at www.esd.ornl/bfdp/oreccl/database.html.

[9] Glassner, D, J. Hettenhaus, and T. Schechinger, "Corn Stover Collection Project," in *BioEnergy '98—Expanding Bioenergy Partnerships: Proceedings, Volume 2*, Madison, WI, pp. 1100-1110, 1998.

[10] This is not entirely true. In reality, a larger plant can have an effect on the market value of the feedstock in the local economy. In this analysis, some simplifying assumptions about the cost of the feedstock are made so that this market effect can be ignored.

[11] Partially reported as experiment 11 in Tucker, M.P., J.D. Farmer, F.A. Keller, D.J. Schell, and Q.A. Nguyen, "Comparison of Yellow Poplar Pretreatment Between NREL Digester and Sunds Hydrolyzer," *Appl. Biochem. Biotechnol*. 70-72:25-35. The NREL PDU run number was P960227SD and the total solids concentration was taken from measurements during the run. The carbohydrate concentrations were taken from CAT analysis #96-042 and were corrected for hydrolysis and normalized to achieve 100% mass closure for the analysis.

[12] *Process Plant Construction Estimating Standards*, Volume 4, Process Equipment, Richardson Engineering Services, Inc., Mesa, AZ, 1993.

[13] Ranatunga, T.D., J. Jervis, R.F. Helm, J.D. McMillan, and C. Hatzis. "Identification of Inhibitory Components Toxic Toward *Zymomonas mobilis* CP4(pZB5) Xylose Fermentation, " *Appl. Biochem. Biotechnol*. 67: 185-198, 1997.

[14] Ranatunga, T.D., J. Jervis, R.F. Helm, J.D. McMillan, and R.J. Wooley, "The overliming of dilute acid pretreated lignocellulosics, Part 1. The fate of inorganics, uronic acids and ether soluble organics", submitted to *Enzyme and Microbial Technology*, 1999.

[15] Partially reported as experiment 11 in Tucker, M.P., J.D. Farmer, F.A. Keller, D.J. Schell, and Q.A. Nguyen. "Comparison of Yellow Poplar Pretreatment Between NREL Digester and Sunds Hydrolyzer," *Appl. Biochem. Biotechnol*.70-72:25-35. The pretreatment run P960227SD (used for yields and composition) had the following conditions: 200°C, 4.6 minute residence time, 0.33% acid concentration, 20.8% solids entering the Sunds. We believe that 190°C, 10 minute, 0.5% acid

conditions will result in better yields. The Sunds reactor has been pushed above 30% solids, so a solids concentration of 30.91% is used in the model.

[16] Pretreatment conversions achieved in the pretreatment run P960227SD (Partially reported as experiment 11 in Tucker, M.P., J.D. Farmer, F.A. Keller, D.J. Schell, and Q.A. Nguyen. "Comparison of Yellow Poplar Pretreatment Between NREL Digester and Sunds Hydrolyzer," *Appl. Biochem. Biotechnol*. 70-72:25-35.). The measured conversions have been normalized so that 100% of each reactant is accounted for in the products.

[17] Pretreatment run P960227SD (partially reported as experiment 11 in Tucker, M.P., J.D. Farmer, F.A. Keller, D.J. Schell, and Q.A. Nguyen, 1998. "Comparison of Yellow Poplar Pretreatment Between NREL Digester and Sunds Hydrolyzer," *Appl. Biochem. Biotechnol.* 70-72:25-35) is the basis for the yields. However, some have changed to account for assumed near-term research improvements. See Appendix E for details.

[18] Hayden, J.G., and J.P. O'Connell, "A Generalized Method for Predicting Second Virial Coefficients," *IEC Process. Des. Dev*., 14(3), 209, 1975.

[19] R. Wooley, "Development of a Scaleable Detoxification Process Maximizing Fermentability," NREL Internal P-Milestone Report, June 30, 1997.

[20] Ranatunga, T.D., J. Jervis, R.F. Helm, J.D. McMillan, and C. Hatzis. "Identification of Inhibitory Components Toxic Toward *Zymomonas mobilis* CP4(pZB5) Xylose Fermentation," *Appl. Biochem. Biotechnol*. 67: 185-198, 1997 defines the hold time to be 30 minutes. The time is increased to 1 hr in the model to allow for reduced heating rates and different reaction kinetics in a large continuous stirred-tank reactor (CSTR).

[21] H. Majdeski, personal experience in the flue gas desulfurization industry, 1998.

[22] Letter to B. Bunner, Delta-T Corporation from A. Bowser, Komline-Sanderson Limited, August 1998.

[23] ICARUS Process Evaluator, Version 4.0, ICARUS Corporation, Rockville, MD, June 30, 1997.

[24] B. Platz, Sunds Defibrator, Inc., personal communication, April 1998. Results of experimental work conducted at TVA, Muscle Shoals Laboratories. Date of tests unknown.

[25] B. Platz, Sunds Defibrator, Inc., personal communication, August 1998.

[26] Zhang, M., C. Eddy, K. Deanda, M. Finkelstein, and S. Picataggio, "Metabolic Engineering of a Pentose Metabolism Pathway in *Zymomonas mobilis*." *Science*, 267:240-243, 1995.

[27] McMillan, J.D., M.P. Tucker, T.K. Hayward, C. Hatzis, and D. Glassner. "Process Qualifier Milestone", Internal Report, National Renewable Energy Laboratory, Golden, CO, 31 August 1996. Experiment PD 23 #3. All SSCF data are from PD 23 #3 except when noted. PD 23 #3 was a batch SSCF run on pretreated yellow poplar (Pretreatment run P960227SD) that was conditioned by liquid/liquid extraction followed by overliming. It was run in a 400-mL working volume fermenter with continuous pH control. Because of the small fermenter size, the effective solids concentration (initial total solids concentration) was only 14.7%. It is believed that a larger fermenter with better mixing could be run with 20% effective solids.

[28] McMillan, J.D., M.P. Tucker, T.K. Hayward, C. Hatzis, and D. Glassner. "Process Qualifier Milestone", Internal Report, National Renewable Energy Laboratory, Golden, CO, 31 August 1996, Experiment PD 23 #3.

[29] McMillan, J.D., M.P. Tucker, T.K. Hayward, C. Hatzis, and D. Glassner. "Process Qualifier Milestone", Internal Report, National Renewable Energy Laboratory, Golden, CO, 31 August 1996, Experiment PD 23 #3. PD 23 #3 utilized a 24-hr residence time for seed production.

[30] Kern, D.Q., *Process Heat Transfer*, McGraw-Hill, New York, 1950, pp. 720-723.

[31] Full mass balances have not been attempted for conditions that favor cell growth as they would in the seed train. Therefore, the seed reaction yields were assumed to be the same as fermentation yields in SSCF (see note 26A), with increased cell mass production. Therefore the cell mass production was increased to 4% from both glucose and xylose and the xylose to products yield was reduced to allow more xylose to be converted to cell mass.

[32] McMillan, J.D., M.P. Tucker, T.K. Hayward, C. Hatzis, and D. Glassner. "Process Qualifier Milestone", Internal Report, National Renewable Energy Laboratory, Golden, CO, 31 August 1996, Experiment PD 23 #3.

[33] McMillan, J.D., M.P. Tucker, T.K. Hayward, C. Hatzis, and D. Glassner. "Process Qualifier Milestone", Internal Report, National Renewable Energy Laboratory, Golden, CO, 31 August 1996. Experiment PD 23 #3 was 12 FPU/g cellulose. That is much lower than has been achieved in any other experiment, so the loading used in the model was increased to 15 FPU/g cellulose.

[34] The CSL loading used in McMillan, J.D., M.P. Tucker, T.K. Hayward, C. Hatzis, and D. Glassner, Process Qualifier Milestone, August 31, 1996, experiment PD 23 #3 was 1% clarified CSL. The experiment titled Nutrient Screen #2 for recombinant Zymo 39676pZB4L conducted by the Enzymatic Process Development (EPD) team during fiscal year 1998 showed that 0.25% CSL was as effective as 1% CSL, so 0.25% CSL is used in the model.

[35] McMillan, J.D., M.P. Tucker, T.K. Hayward, C. Hatzis, and D. Glassner. "Process Qualifier Milestone", Internal Report, National Renewable Energy Laboratory, Golden, CO, 31 August 1996. Experiment PD 23 #3 is the basis for the yields. However, some have changed to account for assumed near-term research improvements. See Appendix E for details.

[36] A loss of 7% of the fermentable sugars to non-ethanol products, such as lactic acid, is estimated based on conversations with corn ethanol producers who indicate they are happy when contamination loss is less then 3%. The estimated loss here is higher because of the longer fermentation residence time and the availability of a larger variety of sugars.

[37] Walker, L.P. and D.B. Wilson, "Enzymatic Hydrolysis of Cellulose: An Overview," *Bioresource Technology* 36:3-14, 1991.

[38] Hamilton, J., "Cellulase Production Experiment No. 36: Air/Oxygen 22 Factoral Design", Internal Report, NREL Enzymatic Process Development Team, Golden, CO, December 1998, Vessel #3.

[39] Schell, D., C. Riley, P. Bergeron, and P. Walter, "Technical and Economic Analysis of an Enzymatic Hydrolysis Based Ethanol Plant – Draft", Solar Energy Research Institute, Golden, CO, SERI Report TP-232-4295, 1991.

[40] K. Kadam and J. McMillan, NREL, personal conversations, June 1998.

[41] R. Landucci, "BEST Peripheral Module Development – Part One: Aeration and Agitation for Aerobic Fermentations", Internal Report, National Renewable Energy Laboratory, Golden, CO, undated. States that the Henry's law coefficient is approximately 1 atm/(

is 1 atm/(mmol/L) at 13°C in pure water and 1.3 atm/(mmol/L)

at 25°C. Solubility may be affected by the non-water components in the broth, so using a Henry's coefficient of 1 is a reasonable initial estimate.

[42] Perry, R.H. and D. Green, eds., *Perry's Chemical Engineers' Handbook*, Sixth Edition, McGraw-Hill Book Company, New York, Equation 18-142, 1984.

[43] Bailey, J.E. and D. F. Ollis, *Biochemical Engineering Fundamentals*,McGraw-Hill Book Company, New York, Equation 8.71, 1986.

[44] Kern, D.K., *Process Heat Transfer*, McGraw-Hill Book Company, New York, p. 722-726, 1950.

[45] McMaster-Carr Supply Company, Catalog 102, New Brunswick, NJ, p. 1266, 1996.

[46] "ASPEN Plus™, Reference Manual–Volume 2, Physical Property Methods and Models," Release 9.3, Aspen Technology, Inc., Cambridge, MA, 1996.

[47] Renon, H., and J.M. Praustniz, "Local Composition in Thermodynamic Excess Functions for Liquid *AIChE J*., 14(1), 135, 1968.

[48] "ASPEN Plus™, Reference Manual–Volume 3, Physical Property Data,"Release 9.3, Aspen Technology, Inc., Cambridge, MA, 1996.

[49] Aersten, F., and G. Street, *Applied Chemical Process Design*, Plenum Press, New York, 1978.

[50] "Biomass-To-Ethanol Total Energy Cycle Analysis", NREL Subcontract RCN 213-185-01-00 Final Report, Radian Corporation, Austin, TX, November 22, 1991.

[51] *Fluidized Bed Combustion and Gasification: A Guide for Biomass Waste Users*, Southeastern Regional Biomass Energy Program, FBT, Inc and Tennessee Valley Authority, Muscle Shoals, AL, July 1994.

[52] "Economic Feasibility Study of an Acid Hydrolysis-Based Ethanol Plant", NREL subcontract ZX-3-03096-2 Final Report, Badger Engineers, Inc., Cambridge, MA, April, 1987.

[53] "ASPEN Modeling of the NREL Boiler/Turbogenerator Systems", NREL Consultant Agreement CXL-8-18051-01, Final Report, V. Putsche, February 1998.

[54] Babcock & Wilcox, 1978. *Steam: It's Generation and Use* Thirty-ninth Edition. Babcock & Wilcox Company, New York, NY, p. 34/10-16.

[55] Phillippek, C. et al, 1997. "NO_x Formation and Reduction During Combustion of Wet Sewage Sludge in the Circulating Fluidized Bed", 1997 Fluidized Bed Combustion vol. 2, ASME 1997.

[56] Amos, W. , "Report on Biomass Drying Technology", NREL Report NREL. TP-570-25885, November 1998, p. 20.

[57] *Process Plant Construction Estimating Standards*, electronic version section 100-374, Richardson Engineering Services, Inc., Mesa, AZ, 1999.

[58] "Biomass to Ethanol Process Evaluation", NREL Final Subcontract Report, Chem Systems, Tarrytown, NY, Appendix V, December 1994

[59] W. Campbell, Foster Wheeler Corporation, Cost Quotation, Proposal 0-02-43731, to V. Putsche, NREL, September 30, 1994.

[60] "Technical and Economic Evaluation: Wood to Ethanol Process", SERI Subcontract Report, Chem Systems, Tarrytown, NY, August, 1990.

[61] Sheehan, J., "Analysis of Regional Conditions for Cooling Water Used in Ethanol Production , Internal Process Engineering Team Report, National Renewable Energy Laboratory, Golden, CO, January 26, 1998.

[62] Peters, M.S. and K.D. Timmerhaus, *Plant Design and Economics for Chemical Engineers*, 4th Edition, McGraw-Hill, Inc., New York, 1991.

[63] "Biomass to Ethanol Process Evaluation", NREL Final Subcontract Report, Chem Systems, Tarrytown, NY, December 1994.

[64] Walas, S. M., *Chemical Process Equipment Selection and Design*, Butterworth Publishing, 1988.

[65] Energy Information Administration, *Annual Energy Outlook 1999 with Projections to 2020*. U.S. Department of Energy, Washington, DC, 1999.

[66] "Chemical Engineering Plant Cost Index," *Chemical Engineering*, May 1997.

[67] "Biomass to Ethanol Process Evaluation", NREL Final Subcontract Report, Chem Systems, Tarrytown, NY, p. VI-3, December 1994.

[68] "U.S. Producer Price Indexes – Chemicals and Allied Products/Industrial Inorganic Chemicals Index," from the *Chemical Economics Handbook*, published by SRI Consulting, a division of SRI International, Menlo Park, CA, October 1997.

[69]Bureau of Labor Statistics Data Web site (www.stats.bls.gov), National Employment, Hours, and Earnings Catalog, Industry: Chemicals and Allied Products. Series ID: EEU32280006, Years: 1980 - 1996, annual average. Data extracted on December 29, 1997.

[70] Short, W., D.J. Packey, and T. Holt, "A Manual for the Economic Evaluation and Energy Efficiency and Renewable Energy Technologies", National Renewable Energy Laboratory, Golden, CO, Report TP-462-5173, p.7, March 1995.

[71] Short, W., D.J. Packey, and T. Holt, "A Manual for the Economic Evaluation and Energy Efficiency and Renewable Energy Technologies", National Renewable Energy Laboratory, Golden, CO, Report TP-462-5173, p. 19, March 1995.

[72] Short, W., D.J. Packey, and T. Holt, "A Manual for the Economic Evaluation and Energy Efficiency and Renewable Energy Technologies", National Renewable Energy Laboratory, Golden, CO, Report TP-462-5173, pp. 20-21, March 1995.

[73] Perry, R. H., and D. W. Green, *Perry's Chemical Engineers' Handbook*, 7th Edition, McGraw-Hill, New York, pp. 9-76, 1997.

[74] Gary, J. H., and G. E. Handwerk, *Petroleum Refining, Technology and Economics*, 3rd Edition, Marcel Dekker, Inc., New York, 1994.

[75] "Bioethanol Strategic Roadmap: A Planning Framework for Development of Biomass-to-Ethanol Technology", NREL, prepared for the Office of Fuels Development, Office of Transportation Technologies, U.S. DOE, Golden, CO, December 1998.

[76] Hettenhaus, J. and D. Glassner, "Enzyme Hydrolysis of Cellulose: Short Term Commercialization Prospects for Conversion of Lignocellulosics to Ethanol", Internal Report, National Renewable Energy Laboratory, Golden, CO, 1997.

[77] "Design, Analysis and Evaluation of Advanced Ethanol Production Technology with Comparison to other Alternative Fuels," NREL Subcontract XCG-8-18024-01, Dartmouth College, Hanover, NH, March 20, 1998, future work.

[78] R. Katzen, personal communication, January 1998.

[79] Ingram, L.O., T. Conway, D.P. Clark, G.W. Sewell, and J.F. Preston, "Genetic Engineering of Ethanol Production in *Escherichia coli*," *Applied and Environmental Microbiology*, Vol. 53, No. 10, 1987, pp 2420-2425. US Patent 5,000,000, "Ethanol production by Escherichia coli strains co-expressing Zymomonas PDC and ADH Genes,", Ingram, L.O. , T. Conway, and F. Alterthum, issued March 19, 1991.

Appendix A

NREL Biofuels Process Design Database Description and Summary

Appendix A NREL Process Database Description and Summary

NREL's Process Engineering Team has developed a database of primary information on all of the equipment in the near term base case model. This database contains information about the cost, reference year, scaling factor, scaling characteristic, design information and back-up cost referencing. The information is stored in a secure database in the Alternative Fuels Data Center and can be directly linked to the economic portion of the model. In addition to having all of the cost information used by the model, it has the ability to store documents pertaining to the piece of equipment. These include sizing and costing calculations and vendor information when available.

The following summarizes the important fields of information contained in the database. A partial listing of the information is attached for each piece of equipment. Addition information from the database is contained in the equipment cost listing in Appendix B.

Equipment Number:[AB]	Unique identifier, the first letter indicates the equipment type and the first number represents the process area, e.g., P-301 is a pump in Area 300
Equipment Name:[AB]	Descriptive Name of the piece of Equipment
Associated PFD:	PFD number on which the piece of equipment appears, e.g., PFD-P100-A101
Equipment Category:[A]	Code indicating the general type of equipment, e.g., PUMP
Equipment Type:[A]	Code indicating the specific type of equipment, e.g., CENTRIFUGAL for a pump
Equipment Description:[A]	Short description of the size or characteristics of the piece of equipment, e.g., 20 gpm, 82 ft head, for a pump.
Number Required:[B]	Number of duplicate pieces of equipment needed.
Number Spares:[B]	Number of on-line spares.
Scaling Stream:	Stream number or other characteristic variable from the ASPEN model by which the equipment cost will be scaled.
Base Cost:[B]	Equipment cost.
Cost Basis:[A]	Source of the equipment cost, e.g., ICARUS or VENDOR.
Cost Year:[B]	Year for which the cost estimate is based.
Base for Scaling:	Value of the scaling stream or variable for which the equipment is based.
Base Type:	Type of variable used for scaling, e.g., FLOW, DUTY, etc.
Base Units:	Units of the scaling stream or variable, e.g., KG/HR, CAL/S.
Installation Factor:[B]	Installation multiplier. Installed Cost = Base Cost x Installation Factor.
Installation Factor Basis:[A]	Source of installation factor value, e.g., ICARUS, VENDOR.
Scale Factor Exponent:[B]	Value for exponential scaling equation
Scale Factor Basis:[A]	Source of scaling exponent value, e.g., GARRETT, VENDOR
Material of Construction:[A]	Material of construction
Notes:	Any other important information about the design or cost.
Document:	Complete, multi-page document containing design calculations, vendor literature and quotations and any other important information. This is stored as an electronic document and can be pages from a spreadsheet, other electronic sources or scanned information from vendors.
Design Date:	Original date for the design of this piece of equipment.
Modified Date:	The system automatically marks the date in this field whenever a field is changed.

[A] These fields are listed for all pieces of equipment in this Appendix.
[B] These fields are part of the equipment cost listing in Appendix B.

Eguip. No.	Equipment Name	Eq. Category	Eq. Type	Equipment Description	Cost Basis	Install. Fact. Basis	Scale Fact. Basis	Material Const.
PFD-P100-A101								
C-101	Hopper Feeder	CONVEYOR	VIBRATING-FEEDER	24" x 42" electromechanical feeder. Rated at 175 TPH for 50 lb/cf coal.	RICHARDSON	DELTA-T98	GARRETT	CS
C-102	Transfer Belt Conveyor	CONVEYOR	BELT	Inclined Belt Conveyor, 210 ft long, 36" wide, fully covered.	VENDOR	DELTA-T98	GARRETT	CS
C-103	Radial Stacker Conveyor	CONVEYOR	BELT	Radial stacking conveyor, 150 ft long, 36" wide, 125 ft covered.	VENDOR	DELTA-T98	GARRETT	CS
C-104	Reclaim Hopper Feeder	CONVEYOR	VIBRATING-FEEDER	24" x 42" electromechanical feeder. Rated at 175 TPH for 50 lb/cf coal.	RICHARDSON	DELTA-T98	GARRETT	CS
C-105	Reclaim Hopper Conveyor	CONVEYOR	BELT	Overhead belt conveyor, 450' long, 36" wide.	VENDOR	DELTA-T98	GARRETT	CS
C-106	Chip Washer Feeder	CONVEYOR	VIBRATING-FEEDER	18" x 30" electromechanical feeder. Rated at 100 TPH for 50 lb/cf coal.	RICHARDSON	DELTA-T98	GARRETT	CS
C-107	Scalper Screen Feeder	CONVEYOR	BELT	42" horizontal drag chain conveyor. Capacity of 4800 tpd.	VENDOR	DELTA-T98	GARRETT	CS
C-108	Pretreatment Feeder	CONVEYOR	BELT	Consists of two parts, a 18" x 42" inclined chain belt and a 42" horizontal unit.	VENDOR	DELTA-T98	GARRETT	CS
M-101	Hydraulic Truck Dump with Scale	SCALE	TRUCK-SCALE	Hydraulic Truck Dumper with Scale	VENDOR	DELTA-T98	DEFAULT	CS
M-103	Front End Loaders	VEHICLE	LOADER	Used diesel front end loaders.	DELTA-T98	UNKNOWN		
M-104	Disk Refiner System	SIZE-REDUCTION		Disk type chip shredder, 50" disk, capacity of 400-500 ODT/D. Includes chip surge bins and discharger.	VENDOR	DELTA-T98	GARRETT	SS316
S-101	Magnetic Separator	SEPARATOR	MAGNET	Tramp iron magnet separator.	VENDOR	DELTA-T98	DEFAULT	
S-102	Scalper Screener	SEPARATOR	SCREEN	Screener removing gross oversize material.	VENDOR	DELTA-T98	GARRETT	CS
S-103	Chip Thickness Screen	SEPARATOR	SCREEN	Screen for chip thickness.	VENDOR	DELTA-T98	GARRETT	CS
T-101	Dump Hopper	TANK	VERTICAL-VESSEL	20' x 20' Bin, Tapering to 3' x 3' at Bottom. Capacity 6345 cf, two truck loads.	DELTA-T98	DELTA-T98	GARRETT	CS
T-102	Reclaim Hopper	TANK	VERTICAL-VESSEL	20' x 20' bin tapering to 3' x 3'. Capacity 6345 cf, for a combined total of 1 hour residence time.	DELTA-T98	DELTA-T98	GARRETT	CS
T-103	Washing/Refining Surge Bin	TANK	VERTICAL-VESSEL	20' x 20' bin tapering to 3' x 3'. Capacity of 8745 cf each for a residence time of 4 hours.	DELTA-T98	DELTA-T98	GARRETT	CS
W-101	Chip Washer System	SEPARATOR	MISCELLANEOUS	Capacity 500 to 600 ODT/d. Scrap separator, screw drainer, circulation pump and cyclone separator.	VENDOR	DELTA-T98	NREL-ESTM	SS304;SS316
PFD-P100-A201,2,3								
A-201	In-line Sulfuric Acid Mixer	MIXER	STATIC	Static Mixer, 248 gpm total flow.	ICARUS	DELTA-T98	ICARUS	SS304
A-202	In-line NH3 Mixer	MIXER	STATIC	Static Mixer, 240 gpm total flow	ICARUS	DELTA-T98	ICARUS	SS304
A-209	Overliming Tank Agitator	AGITATOR	FIXED-PROP	Top Mounted, 1800 rpm, 25 hp	ICARUS	DELTA-T98	GARRETT	SS
A-224	Reacidification Tank Agitator	AGITATOR	FIXED-PROP	Top-Mounted, 1800 rpm, 93 hp	ICARUS	DELTA-T98	GARRETT	SS
A-232	Reslurrying Tank Agitator	AGITATOR	FIXED-PROP	Top-Mounted, 1800 rpm, 50 hp	ICARUS	DELTA-T98	GARRETT	SS
A-235	In-line Acidification Mixer	MIXER	STATIC	Static-Mixer, 720 gpm total flow	ICARUS	DELTA-T98	NREL-ESTM	304SS
C-201	Hydrolyzate Screw Conveyor	CONVEYOR	SCREW	18" dia. X 33' long, 7600 cfh max flow	ICARUS	DELTA-T98	GARRETT	SS316
C-202	Wash Solids Screw Conveyor	CONVEYOR	SCREW	18" dia. X 16' long, 7600 cfh max flow	ICARUS	ICARUS	MULTI-UNIT	SS304
C-225	Lime Solids Feeder	CONVEYOR	ROTARY-VALVE	8" dia., 140 cfh, 7000 lb/hr max flow	ICARUS	DELTA-T98		A285C
H-200	Hydrolyzate Cooler	HEATX	SHELL-TUBE	Fixed Tube Sheet,1990 sf, 27" dia. X 20' long	ICARUS	DELTA-T98	GARRETT	304SS;CS
H-201	Beer Column Feed Economizer	HEATX	SHELL-TUBE	Floating Head, 6266 sf, 48" dia x 23' long	ICARUS	DELTA-T98	GARRETT	304SS
M-202	Prehydrolysis Reactor System	REACTOR	SCREW	Vertical Screw, 10 min residence time	VENDOR	CHEMSYST94	GARRETT	HASTELLOY-C 200;SS316L
P-201	Sulfuric Acid Pump	PUMP	CENTRIFUGAL	4 gpm, 245 ft. head	ICARUS	DELTA-T98	GARRETT	SS304
P-209	Overlimed Hydrolyzate Pump	PUMP	CENTRIFUGAL	687 gpm, 150 ft. head	ICARUS	DELTA-T98	GARRETT	304SS
P-222	Filtered Hydrolyzate Pump	PUMP	CENTRIFUGAL	721 gpm, 150 ft head	ICARUS	DELTA-T98	GARRETT	304SS
P-223	Lime Unloading Blower	FAN	CENTRIFUGAL	7425 cfm, 6 psi, 22275 lb/hr	DELTA-T98	DELTA-T98	GARRETT	C.S.
P-224	Fermentation Feed Pump	PUMP	ROTARY-LOBE	737 gpm, 200 ft head	VENDOR	ICARUS	VENDOR	304SS
P-225	ISEP Elution Pump	PUMP	CENTRIFUGAL	232 gpm, 150 ft head	ICARUS	DELTA-T98	GARRETT	SS304
P-226	ISEP Reload Pump	PUMP	CENTRIFUGAL	358 gpm, 150 ft head	ICARUS	DELTA-T98	GARRETT	SS304
P-227	ISEP Hydrolyzate Feed Pump	PUMP	CENTRIFUGAL	700 gpm, 150 ft head	ICARUS	DELTA-T98	GARRETT	SS304
P-239	Reacidified Liquor Pump	PUMP	CENTRIFUGAL	720 gpm, 100 ft head	ICARUS	DELTA-T98	GARRETT	SS304
S-202	Pre-IX Belt Filter Press	S/L SEPARATOR	BELT-FILTER-PRESS	181 gpm slurry each, 16.7% insoluble solids	VENDOR	ICARUS	GARRETT	SS316
S-221	ISEP	SEPARATOR	CONT-IX	20 chambers (39" dia. X 84" high), 4" dia. Valve - Weak Base Resin	VENDOR	NREL-ESTM	VENDOR	SS316;POLYPROP;RESIN-LINED-(
S-222	Hydroclone & Rotary Drum Filter	S/L SEPARATOR	ROTARY-DRUM	Hydrocyclone and Vacuum Filter	VENDOR	DELTA-T98	GARRETT	EPOXY LINED
S-227	LimeDust Vent Baghouse	SEPARATOR	FABRIC-FILTER	8333 cfm, 1389 sf, 6 cfm/sf	ICARUS	DELTA-T98	ICARUS	A285C;POLYESTER
T-201	Sulfuric Acid Storage	TANK	VERTICAL-VESSEL	6444 gal., 24 hr. residence time, 90% wv	DELTA-T98	DELTA-T98	GARRETT	PLASTIC
T-203	Blowdown Tank	TANK	VERTICAL-VESSEL	14500 gal., 11' dia x 30' high, 10 min. res. time, 75% wv, 15 psig	ICARUS	ICARUS	GARRETT	SS316
T-209	Overliming Tank	TANK	VERTICAL-VESSEL	46200 gal., 16' dia. X 32' high, 1 hr. res. time, 90% wv, 15 psig	ICARUS	DELTA-T98	GARRETT	SS304
T-220	Lime Storage Bin	TANK	LIVE-BTM-BIN	4455 cf, 14' dia x 25' high, 1.5x rail car vol., atmospheric	ICARUS	DELTA-T98	ICARUS	CS
T-224	Reacidification Tank	TANK	FLAT-BTM-STORAGE	185200 gal., 32' dia x 32' high, 4 hr. res. time, 90% wv, atmospheric	ICARUS	DELTA-T98	GARRETT	SS304
T-232	Slurrying Tank	TANK	FLAT-BTM-STORAGE	24770 gal., 13' dia. X 25' high, 15 min. res. time, 90% wv, atmospheric	ICARUS	DELTA-T98	GARRETT	SS304

Note: Eq. Sizes Listed are for a Base Case and may have been scaled up or down in the final cost estimation.

Eguip. No.	Equipment Name	Eq. Category	Eq. Type	Equipment Description	Cost Basis	Install. Fact. Basis	Scale Fact. Basis	Material Const.
PFD-P100-A301,2								
A-300	SSCF Fermentor Agitators	AGITATOR	FIXED-PROP	Side Mounted, 2 per vessel, 75 hp each, 0.15 hp/1000 gal	DELTA-T98	DELTA-T98		SS304
A-301	Seed Hold Tank Agitator	AGITATOR	FIXED-PROP	Top Mounted, 1800 rpm, 23 hp, 0.1 hp/1000 gal	DELTA-T98	DELTA-T98	GARRETT	SS304
A-304	4th Seed Vessel Agitator	AGITATOR	FIXED-PROP	Top Mounted, 1800 rpm, 6 hp, 0.3 hp/1000 gal	ICARUS	DELTA-T98	GARRETT	SS
A-305	5th Seed Vessel Agitator	AGITATOR	FIXED-PROP	Top Mounted, 1800 rpm, 19 hp, 0.1 hp/1000 gal	DELTA-T98	DELTA-T98	GARRETT	SS
A-306	Beer Surge Tank Agitator	AGITATOR	FIXED-PROP	Top Mounted, 1800 rpm, 4 hp, 0.3 hp/1000 gal	ICARUS	DELTA-T98	GARRETT	SS304
F-300	SSCF Fermentors	TANK	FLAT-BTM-STORAGE	962,651 gal. each, 7 day residence total, 90% wv, API, atmospheric	VENDOR	DELTA-T98	MULTI-UNIT	SS304
F-301	1st SSCF Seed Fermentor	REACTOR	VERTICAL-VESSEL	20 gal, jacketed, agitated, 1.3' dia., 2' high, 15 psig	ICARUS	DELTA-T98		SS304
F-302	2nd SSCF Seed Fermentor	REACTOR	VERTICAL-VESSEL	194 gal., jacketed, agitated, 3' dia., 4' high, 2.5 psig	ICARUS	ICARUS		SS304
F-303	3rd SSCF Seed Fermentor	REACTOR	VERTICAL-VESSEL	1950 gal., jacketed, agitated, 6.5' dia, 8' high, 2.5 psig	ICARUS	DELTA-T98		SS304
F-304	4th SSCF Seed Fermentor	REACTOR	FLAT-BTM-STORAGE	19444 gal., 12' dia x 23' high, atmospheric	ICARUS	DELTA-T98	GARRETT	SS304
F-305	5th SSCF Seed Fermentor	REACTOR	FLAT-BTM-STORAGE	194500 gal., API, atmospheric	VENDOR	DELTA-T98	GARRETT	SS304
H-300	Fermentation Cooler	HEATX	PLATE-FRAME	2393 sf, 300 BTU/hr sf F	ICARUS	DELTA-T98	GARRETT	SS304
H-301	SSCF Seed Hydrolyzate Cooler	HEATX	PLATE-FRAME	773 sf, 300 BTU/hr sf F	DELTA-T98	DELTA-T98	GARRETT	SS304
H-302	SSCF Hydrolyzate Cooler	HEATX	PLATE-FRAME	3765 sf total, 1255 sf each, 300 BTU/hr sf F	DELTA-T98	DELTA-T98	GARRETT	SS304
H-304	4TH Seed Fermentor Coils	HEATX	IMMERSED-COIL	27 sf, 1" sch 40 pipe, 105 BTU/hr sf F	ICARUS	DELTA-T98	ICARUS	SS
H-305	5TH Seed Fermentor Coils	HEATX	IMMERSED-COIL	307 sf, 3" sch 40 pipe, 92 BTU/hr sf F	ICARUS	DELTA-T98	ICARUS	SS
P-300	SSCF Recirculation and Transfer Pump	PUMP	CENTRIFUGAL	1060 gpm, 150 ft head	ICARUS	DELTA-T98	GARRETT	SS304
P-301	SSCF Seed Transfer Pump	PUMP	ROTARY-LOBE	172 gpm, 150 ft head	VENDOR	CHEMSYST94	VENDOR	SS304
P-302	Seed Transfer Pump	PUMP	ROTARY-LOBE	1231 gpm total, 615 gpm each, 100 ft head	VENDOR	CHEMSYST94	VENDOR	SS304
P-306	Beer Transfer Pump	PUMP	CENTRIFUGAL	1632 gpm each, 171 ft head	ICARUS	DELTA-T98	GARRETT	SS304
T-301	SSCF Seed Hold Tank	TANK	FLAT-BTM-STORAGE	233,333 gal., API atmospheric	VENDOR	DELTA-T98	GARRETT	SS304
T-306	Beer Storage Tank	TANK	FLAT-BTM-STORAGE	15000 gal., 11' dia x 21' high, 8 min res. Time, 90% wv, atmospheric	ICARUS	DELTA-T98	GARRETT	SS304
PFD-P100-A-401,2								
A-400	Cellulase Fermentor Agitators	AGITATOR	AXIAL-IMPELLER	600 hp / agitator -- 1 agitator/vessel	VENDOR	DELTA-T98		SS304
F-400	Cellulase Fermentors	REACTOR	VERTICAL-VESSEL	267,631 gal / 25 psig / Cooling coils in tank costed as H400, 37 ft. height, 36 ft. diameter	DELTA-T98	DELTA-T98		SS304L
F-401	1st Cellulase Seed Fermentor	REACTOR	VERTICAL-VESSEL	33 gal / 15 psig / Jacketed / Agitator	ICARUS	DELTA-T98	GARRETT	SS304
F-402	2nd Cellulase Seed Fermentor	REACTOR	VERTICAL-VESSEL	661 gal / 15 psig / Jacketed./Agitator	ICARUS	DELTA-T98	GARRETT	SS304
F-403	3rd Cellulase Seed Fermentor	REACTOR	VERTICAL-VESSEL	13210 gal / 15 psig / Jacketed./Agitator	ICARUS	DELTA-T98	GARRETT	SS304
H-400	Cellulase Fermentation Cooler	HEATX	IMMERSED-COIL	Immersible Coil 613 ft2	ICARUS	DELTA-T98	GARRETT	SS304
M-401	Fermentor Air Compressor Package	COMPRESSOR	CENTRIFUGAL	22271 scfm, 55 psig outlet, 4000 hp	VENDOR	DELTA-T98	GARRETT	CS
P-400	Cellulase Transfer Pump	PUMP	CENTRIFUGAL	175 GPM / 100 ft. head	ICARUS	DELTA-T98	GARRETT	SS
P-401	Cellulase Seed Pump	PUMP	ROTARY-LOBE	72.5 gpm / 5 hp	VENDOR	DELTA-T98		SS316
P-405	Media Pump	PUMP	CENTRIFUGAL	62.5 Gpm/100 Ft Head	ICARUS	DELTA-T98	GARRETT	SS
P-420	Anti-foam Pump	PUMP	CENTRIFUGAL	11.2 gpm / 75 ft head	ICARUS	DELTA-T98	GARRETT	CS
T-405	Media-Prep Tank	TANK	VERTICAL-VESSEL	6250 Gal / 1.17 hp Agitator	ICARUS	DELTA-T98	GARRETT	SS304
T-420	Anti-foam Tank	TANK	VERTICAL-VESSEL	200 gal, 3 hr. residence time	DELTA-T98	DELTA-T98	UNKNOWN	POLYETHYLENE

Note: Eq. Sizes Listed are for a Base Case and may have been scaled up or down in the final cost estimation.

Eguip. No.	Equipment Name	Eq. Category	Eq. Type	Equipment Description	Cost Basis	Install. Fact. Basis	Scale Fact. Basis	Material Const.
PFD-P100-A-501,2,3,4								
D-501	Beer Column	COLUMN	DISTILLATION	13.5' dia, 32 Actual Trays, Nutter V-Grid Trays	DELTA-T98	DELTA-T98	GARRETT	SS304
D-502	Rectification Column	COLUMN	DISTILLATION	11.5' dia.(rect)., 4' dia. (strip) x 18" T.S., 60 act. Trays, 60% eff., Nutter V-Grid trays	DELTA-T98	DELTA-T98	GARRETT	SS
E-501	1st Effect Evaporation	HEATX	SHELL-TUBE	22280 sf each., 135 BTU/hr sf F	DELTA-T98	DELTA-T98	GARRETT	SS316
E-502	2nd Effect Evaporation	HEATX	SHELL-TUBE	22278 sf., 170 BTU/hr sf F	DELTA-T98	DELTA-T98	GARRETT	SS316
E-503	3rd Effect Evaporation	HEATX	SHELL-TUBE	22278 sf each., 170 BTU/hr sf F	DELTA-T98	DELTA-T98	GARRETT	SS316
H-501	Beer Column Reboiler	HEATX	SHELL-TUBE	Fixed TS, 13899 sf, 41" dia., 20' long, 178 BTU/hr sf F	DELTA-T98	DELTA-T98	GARRETT	SS304;CS
H-502	Rectification Column Reboiler	HEATX	SHELL-TUBE	Thermosyphon, 1089 sf, 20" dia., 20' long, 130 BTU/hr sf F	ICARUS	DELTA-T98	GARRETT	SS304;CS
H-504	Beer Column Condenser	HEATX	SHELL-TUBE	Floating Head, 880 sf, 20" dia., 22' long, 92 BTU/hr sf F	DELTA-T98	DELTA-T98	GARRETT	SS304;CS
H-505	Rectification Column Condenser	HEATX	SHELL-TUBE	Fixed TS, 4146 sf, 39" dia, 20' long, 157 BTU/hr sf F	DELTA-T98	DELTA-T98	GARRETT	SS304;CS
H-512	Beer Column Feed Interchange	HEATX	PLATE-FRAME	909 sf, 200 BTU/hr sf F	DELTA-T98	DELTA-T98	GARRETT	SS
H-517	Evaporator Condenser	HEATX	SHELL-TUBE	Fixed TS, 8223 sf, 39" dia., 20' long, 220 BTU/hr sf F	DELTA-T98	DELTA-T98	GARRETT	SS304;CS
M-503	Molecular Sieve (9 pieces)	MISCELLANEOUS	PACKAGE	Superheater, twin mole sieve columns, product cooler, condenser, pumps, vacuum source.	VENDOR	DELTA-T98		SS
P-501	Beer Column Bottoms Pump	PUMP	CENTRIFUGAL	5053 gpm, 150 ft head	ICARUS	ICARUS	GARRETT	SS
P-503	Beer Column Reflux Pump	PUMP	CENTRIFUGAL	12 gpm, 140 ft head	DELTA-T98	DELTA-T98	GARRETT	SS
P-504	Rectification Column Bottoms Pump	PUMP	CENTRIFUGAL	154 gpm, 158 ft head	DELTA-T98	DELTA-T98	GARRETT	SS
P-505	Rectification Column Reflux Pump	PUMP	CENTRIFUGAL	437 gpm, 110 ft head	DELTA-T98	DELTA-T98	GARRETT	SS
P-511	1st Effect Pump	PUMP	CENTRIFUGAL	2393 gpm each, 110 ft head	ICARUS	DELTA-T98	GARRETT	SS
P-512	2nd Effect Pump	PUMP	CENTRIFUGAL	1261 gpm, 110 ft head	ICARUS	DELTA-T98	GARRETT	SS
P-513	3rd Effect Pump	PUMP	CENTRIFUGAL	412 gpm each, 110 ft head	ICARUS	DELTA-T98	GARRETT	SS
P-514	Evaporator Condensate Pump	PUMP	CENTRIFUGAL	617 gpm, 125 ft head	ICARUS	DELTA-T98	GARRETT	SS304
P-515	Scrubber Bottoms Pump	PUMP	CENTRIFUGAL	69 gpm, 104 ft head	DELTA-T98	DELTA-T98	GARRETT	SS
T-503	Beer Column Relfux Drum	TANK	HORIZONTAL-VESSEL	346 gal, 15 min res. Time, 50% wv, 3' dia., 6.5' long, 25 psig	ICARUS	DELTA-T98	GARRETT	SS304
T-505	Rectification Column Reflux Drum	TANK	HORIZONTAL-VESSEL	13106 gal, 15 min res time, 50% wv, 9' dia, 27.5' long, 25 psig	ICARUS	DELTA-T98	GARRETT	SS304
T-512	Vent Scrubber	COLUMN	ABSORBER	7' dia x 25' high, 4 stages, plastic Jaeger Tri-Packing	DELTA-T98	DELTA-T98	GARRETT	SS304;PLASTIC
PFD-P100-A601,2,3								
A-602	Equalization Basin Agitator	AGITATOR	FIXED-PROP	38 hp each, Fixed Prop, 0.1 hp/1000 gal	ICARUS	DELTA-T98	GARRETT	SS
A-606	Anaerobic Agitator	AGITATOR	FIXED-PROP	Fixed Prop, 41 hp, 0.05 hp/1000 gal	ICARUS	DELTA-T98	GARRETT	SS
A-608	Aerobic Lagoon Agitators	AGITATOR	SURFACE-AERATOR	Twister Surface Aerators, 50 HP ea	VENDOR	MERRICK98	GARRETT	CS
A-630	Recycled Water Tank Agitator	AGITATOR	FIXED-PROP	5 hp, 50 rpm,	VENDOR	DELTA-T98	GARRETT	CS
C-601	Lignin Wet Cake Screw	CONVEYOR	SCREW	14" Dia X 100' Long	ICARUS	DELTA-T98	GARRETT	CS
C-614	Aerobic Sludge Screw	CONVEYOR	SCREW	9" Dia X 25' Long	ICARUS	DELTA-T98	GARRETT	CS
H-602	Anaerobic Digestor Feed Cooler	HEATX	SHELL-TUBE	TEMA BES Type, Floating Head	ICARUS	DELTA-T98	VENDOR	SS316;CS
M-604	Nutrient Feed System	MISCELLANEOUS	PACKAGE	5 Tanks and Pumps	VENDOR	VENDOR		CS
M-606	Biogas Emergency Flare	MISCELLANEOUS	MISCELLANEOUS	Flare and Pilot	VENDOR	VENDOR	DEFAULT	SS
M-612	Filter Precoat System	MISCELLANEOUS	MISCELLANEOUS	Tank, Agitator, Pump	MERRICK98			CS
P-602	Anaerobic Reactor Feed Pump	PUMP	CENTRIFUGAL	876 gpm, 150 ft head	ICARUS	DELTA-T98	GARRETT	CS
P-606	Aerobic Digestor Feed Pump	PUMP	CENTRIFUGAL	830 gpm, 150 ft head	ICARUS	DELTA-T98	GARRETT	CS
P-608	Aerobic Sludge Recycle Pump	PUMP	SLURRY	2.5 gpm, 150 ft head	ICARUS	DELTA-T98	GARRETT	SS316
P-610	Aerobic Sludge Pump	PUMP	SLURRY	25.3 gpm, 150 ft head	ICARUS	DELTA-T98	GARRETT	SS316
P-611	Aerobic Digestion Outlet Pump	PUMP	CENTRIFUGAL	828 gpm, 150' head	ICARUS	DELTA-T98	GARRETT	CS
P-614	Sludge Filtrate Recycle Pump	PUMP	CENTRIFUGAL	22 gpm, 150' head	ICARUS	DELTA-T98	GARRETT	CS
P-616	Treated Water Pump	PUMP	CENTRIFUGAL	803 gpm, 100 ft head	ICARUS	DELTA-T98	GARRETT	CS
P-630	Recycled Water Pump	PUMP	CENTRIFUGAL	790 gpm, 150 ft head	ICARUS	DELTA-T98	GARRETT	CS
S-600	Bar Screen	SEPARATOR	SCREEN	0.5" Mech. cleaned Screen	CH2MHL91	DELTA-T98	ASSUMED	CS
S-601	Beer Column Bottoms Centrifuge	S/L SEPARATOR	CENTRIFUGE	36" X 12", 550 HP EACH	VENDOR	DELTA-T98	GARRETT	316SS
S-614	Belt Filter Press	S/L SEPARATOR	FILTER-PRESS	BELT THICKNESS	VENDOR	VENDOR	VENDOR	304SS;BUNA N
T-602	Equalization Basin	TANK	FLAT-BTM-STORAGE	377516 gal, Residence time 7.2 hr,	VENDOR	VENDOR	GARRETT	CONCRETE
T-606	Anaerobic Digestor	TANK	FLAT-BTM-STORAGE	810250 gal each, space velocity 12g COD/L/DAY	VENDOR	VENDOR	GARRETT	EPOXY-LINED
T-608	Aerobic Digestor	REACTOR	LINED-PIT	19500000 gal, 16.3 day residence time	MERRICK98	MERRICK98		POLYMER LINED
T-610	Clarifier	SEPARATOR	CLARIFIER	195289 gal, Residence time 3.9 hr.	VENDOR	VENDOR	GARRETT	CONCRETE
T-630	Recycled Water Tank	TANK	FLAT-BTM-STORAGE	13218 gal, Residence time 20 min, 2.5 psig	VENDOR	DELTA-T98	VENDOR	CS

Note: Eq. Sizes Listed are for a Base Case and may have been scaled up or down in the final cost estimation.

Eguip. No.	Equipment Name	Eq. Category	Eq. Type	Equipment Description	Cost Basis	Install. Fact. Basis	Scale Fact. Basis	Material Const.
PFD-P100-A701								
A-701	Denaturant In-line Mixer	MIXER	STATIC	Static Mixer, total flow 341 gpm	ICARUS	DELTA-T98	ICARUS	SS304
P-701	Ethanol Product Pump	PUMP	CENTRIFUGAL	324 gpm, 112 ft head	ICARUS	DELTA-T98	GARRETT	CS
P-703	Sulfuric Acid Pump	PUMP	CENTRIFUGAL	215 gpm, 150 ft head	ICARUS	DELTA-T98	GARRETT	SS316
P-704	Firewater Pump	PUMP	CENTRIFUGAL	2500 gpm, 50 ft head	ICARUS	DELTA-T98	GARRETT	CS
P-706	Ammonia Pump	PUMP	CENTRIFUGAL	8.5 gpm, 22 ft head	ICARUS	DELTA-T98	GARRETT	CS
P-707	Antifoam Store Pump	PUMP	CENTRIFUGAL	1 gpm, 92 ft head	ICARUS	DELTA-T98	GARRETT	CS
P-708	Diesel Pump	PUMP	CENTRIFUGAL	30 gpm, 150 ft head	ICARUS	DELTA-T98		CS
P-710	Gasoline Pump	PUMP	CENTRIFUGAL	17 gpm, 200 ft head	ICARUS	DELTA-T98	GARRETT	CS
P-720	CSL Pump	PUMP	CENTRIFUGAL	431 gpm, 150 ft head	ICARUS	DELTA-T98	GARRETT	CS
T-701	Ethanol Product Storage Tank	TANK	FLAT-BTM-STORAGE	604,133 gal, 7 day res time total, 90% wv, 51' dia x 40' high, atmospheric	ICARUS	DELTA-T98	GARRETT	A285C
T-703	Sulfuric Acid Storage Tank	TANK	FLAT-BTM-STORAGE	18697 gal, 120 hr res time, 90% wv, 12' dia x 22' high, atmospheric	ICARUS	ICARUS	GARRETT	SS316
T-704	Firewater Storage Tank	TANK	FLAT-BTM-STORAGE	600,000 gal, 4 hr res time, 51' dia x 40' high, atmospheric	ICARUS	DELTA-T98	GARRETT	A285C
T-706	Ammonia Storage Tank	TANK	HORIZONTAL-STORAGE	57,500 gal, 4.2 day res time (1.5 x rail car), 13' dia x 60' long, 260 psig	ICARUS	DELTA-T98	GARRETT	A515
T-707	Antifoam Storage Tank	TANK	FLAT-BTM-STORAGE	12,000 gal, 7 day res time, 90% wv, 10.5' dia x 18.5' high, atmospheric	ICARUS	DELTA-T98	GARRETT	A285C
T-708	Diesel Storage Tank	TANK	FLAT-BTM-STORAGE	10,667 gal, 120 hr res time, 90% wv, 10' dia x 18.2' high, atmospheric	ICARUS	DELTA-T98		A285C
T-710	Gasoline Storage Tank	TANK	FLAT-BTM-STORAGE	63,593 gal, 168 hr res time, 90% wv, 19' dia x 32' high, atmospheric	ICARUS	DELTA-T98	GARRETT	A285C
T-720	CSL Storage Tank	TANK	FLAT-BTM-STORAGE	71,918 gal, 120 hr res time, 90% wv, 20' dia x 32' high, atmospheric	ICARUS	ICARUS	GARRETT	SS304
PFD-P100-801,2,3,4								
H-811	BFW Preheater	HEATX	SHELL-TUBE	Floating Head, 500 SF	ICARUS	DELTA-T98	GARRETT	SS304
M-801	Solid Feed Rotary Dryer	DRYER	ROTARY-DRUM	Rotary Drum Dryer	VENDOR	CHEMSYST94	GARRETT	
M-803	Fluidized Bed Combustion Reactor	MISCELLANEOUS	MISCELLANEOUS	900 to 1250 psig/950F Circ. Fluid Bed	VENDOR	DELTA-T98	VENDOR	CS
M-804	Combustion Gas Baghouse	SEPARATOR	FABRIC-FILTER	Pulse Shaker, 545000 cfm, 135,135 SF	VENDOR	VENDOR	MULTI-UNIT	A285C;FABRIC
M-811	Turbine/Generator	GENERATOR	STEAM-TURBINE	52-61 MW; 281000 KG/HR STEAM	VENDOR	DELTA-T98	VENDOR	
M-820	Hot Process Water Softener System	MISCELLANEOUS	PACKAGE	1000 gpm flow, 24" dia softener. Includes filters, chemical feeders, piping, valves	RICHARDSON	NREL-ESTM	MULTI-UNIT	
M-830	Hydrazine Addition Pkg.	MISCELLANEOUS	PACKAGE	150 gal tank, agitator, 2 metering pumps	CHEMSYST94	CHEMSYST94	DEFAULT	
M-832	Ammonia Addition Pkg	MISCELLANEOUS	PACKAGE	150 gal tank, agitator, 2 metering pumps	CHEMSYST94	CHEMSYST94	DEFAULT	
M-834	Phosphate Addition Pkg.	MISCELLANEOUS	PACKAGE	150 gal tank, agitator, 2 metering pumps	CHEMSYST94	CHEMSYST94	DEFAULT	
P-804	Condensate Pump	PUMP	CENTRIFUGAL	272 gpm 150' head	ICARUS	DELTA-T98	GARRETT	SS316
P-811	Turbine Condensate Pump	PUMP	CENTRIFUGAL	175 gpm, 150 ft head.	ICARUS	DELTA-T98	GARRETT	SS304
P-824	Deaerator Feed Pump	PUMP	CENTRIFUGAL	650 gpm, 115 ft head.	ICARUS	DELTA-T98	GARRETT	SS304
P-826	BFW Pump	PUMP	CENTRIFUGAL	500 gpm, 2740 ft head.	VENDOR	DELTA-T98	GARRETT	SS316
P-828	Blowdown Pump	PUMP	CENTRIFUGAL	29 gpm, 150 ' head	ICARUS	DELTA-T98	GARRETT	CS
P-830	Hydrazine Transfer Pump	PUMP	CENTRIFUGAL	5 gpm, 75 ft head	DELTA-T98	DELTA-T98	GARRETT	CS
T-804	Condensate Collection Tank	TANK	VERTICAL-VESSEL	1600 gal, Residence time 1.5 minutes, atmospheric	ICARUS	DELTA-T98	GARRETT	A285C
T-824	Condensate Surge Drum	TANK	HORIZONTAL-VESSEL	11,400 gal, 24' x 9'dia, 15psig, Residence time 11 min.	ICARUS	DELTA-T98	GARRETT	SS304
T-826	Deaerator	TANK	HORIZONTAL-VESSEL	18,170 gal hold tank, 150 psig design pressure, 10 min residence time	VENDOR	CHEMSYST94	GARRETT	CS;SS316
T-828	Blowdown Flash Drum	TANK	HORIZONTAL-VESSEL	424 gal, 4.5' x 4'dia, 15 psig	ICARUS	DELTA-T98	GARRETT	CS
T-830	Hydrazine Drum	TANK	VERTICAL-VESSEL	260 gal, 4.9' x 3'dia., 10psig	ICARUS	DELTA-T98	GARRETT	SS316
PFD-P100-A901,2,3								
M-902	Cooling Tower System	COOLING-TOWER	INDUCED-DRAFT	71000 gpm, 147.8 x E6 kcal/hr, 5 cell	DELTA-T98	DELTA-T98	GARRETT	FIBERGLASS
M-904	Plant Air Compressor	COMPRESSOR	RECIPROCATING	450 cfm, 125 psig outlet	ICARUS	DELTA-T98	GARRETT	CS
M-908	Chilled Water Package	COMPRESSOR	CENTRIFUGAL	2000 tons each, 1200 kw	ICARUS	DELTA-T98	GARRETT	CS
M-910	CIP System	MISCELLANEOUS	MISCELLANEOUS	Designed by Delta-T. Same cost as sum of previous units.	DELTA-T98	DELTA-T98	NREL-ESTM	CS
P-902	Cooling Water Pumps	PUMP	CENTRIFUGAL	41000 gpm, 70 ft head.	ICARUS	DELTA-T98	GARRETT	CS
P-912	Make-up Water Pump	PUMP	CENTRIFUGAL	1083 gpm, 75 ft. head	ICARUS	DELTA-T98	GARRETT	CS
P-914	Process Water Circulating Pump	PUMP	CENTRIFUGAL	1199 gpm ea, 75 ft. head	ICARUS	DELTA-T98	GARRETT	CS
S-904	Instrument Air Dryer	DRYER	PACKAGE	400 SCFM Air Dryer, -40F Dewpoint	RICHARDSON	DELTA-T98	DEFAULT	CS
T-904	Plant Air Receiver	TANK	HORIZONTAL-VESSEL	900 gal., 200 psig	ICARUS	DELTA-T98	GARRETT	CS
T-914	Process Water Tank	TANK	FLAT-BTM-STORAGE	756000 gal. 8 hr res time	ICARUS	DELTA-T98	GARRETT	CS

Note: Eq. Sizes Listed are for a Base Case and may have been scaled up or down in the final cost estimation.

Appendix B

Individual Equipment Costs Summary

Individual Equipment Cost Summary

Equip No.	No. Req'd	No. Spares	Equip Name	Scaled On	Size Ratio (Base/ Current)	Original Equip Cost (per unit)	Base Year	Total Original Equip Cost (Req'd & Spare) in Base Year	Scaling Exponent	Scaled Cost in Base Year	Installation Factor	Installed Cost in Base Year	Installed Cost in 1997$
C-101	3	1	Hopper Feeder	Flow	1.00	$8,000	1999	$32,000	0.76	$32,000	1.3	$41,600	$40,679
C-102	1		Transfer Belt Conveyor	Flow	1.00	$78,120	1999	$78,120	0.76	$78,120	1.3	$101,556	$99,307
C-103	1		Radial Stacker Conveyor	Flow	1.00	$200,100	1999	$200,100	0.76	$200,100	1.3	$260,130	$254,369
C-104	2		Reclaim Hopper Feeder	Flow	1.00	$8,000	1999	$16,000	0.76	$16,000	1.3	$20,800	$20,339
C-105	1		Reclaim Hopper Conveyor	Flow	1.00	$172,976	1999	$172,976	0.76	$172,976	1.3	$224,869	$219,889
C-106	4		Chip Washer Feeder	Flow	1.00	$5,500	1999	$22,000	0.76	$22,000	1.3	$28,600	$27,967
C-107	2		Scalper Screen Feeder	Flow	1.00	$13,392	1998	$26,784	0.76	$26,784	1.3	$34,819	$34,429
C-108	1		Pretreatment Feeder	Flow	1.00	$95,255	1998	$95,255	0.76	$95,255	1.3	$123,832	$122,445
M-101	3	1	Hydraulic Truck Dump with Scale	Flow	1.00	$80,000	1998	$320,000	0.6	$320,000	1.3	$416,000	$411,342
M-103	2		Front End Loaders	None		$156,000	1998	$312,000		$312,000	1	$312,000	$308,506
M-104	1		Disk Refiner System	Flow	1.00	$382,500	1997	$382,500	0.62	$382,500	1.3	$497,250	$497,250
S-101	1		Magnetic Separator	Flow	1.00	$13,863	1998	$13,863	0.6	$13,863	1.3	$18,022	$17,820
S-102	2		Scalper Screener	Flow	1.00	$29,554	1998	$59,108	0.75	$59,108	1.3	$76,840	$75,980
S-103	1		Chip Thickness Screen	Flow	1.00	$218,699	1998	$218,699	0.75	$218,699	1.3	$284,309	$281,125
T-101	3	1	Dump Hopper	Flow	1.00	$28,327	1998	$113,308	0.71	$113,308	1.4	$158,631	$156,855
T-102	2		Reclaim Hopper	Flow	1.00	$28,327	1998	$56,654	0.51	$56,654	1.4	$79,316	$78,427
T-103	4		Washing/Refining Surge Bin	Flow	1.00	$36,103	1998	$144,412	0.51	$144,412	1.4	$202,177	$199,913
W-101	4		Chip Washer System	Flow	1.00	$400,000	1998	$1,600,000	0.6	$1,600,000	1.3	$2,080,000	$2,056,710
A100							Subtotal*	$3,863,779		$3,863,779	1.28	$4,960,750	$4,903,353

*Sections are subtotaled and an average "Installation Factor" is back calculated for the section.

Individual Equipment Cost Summary

Equip No.	No. Req'd	No. Spares	Equip Name	Scaled On	Size Ratio (Base/ Current)	Original Equip Cost (per unit)	Base Year	Total Original Equip Cost (Req'd & Spare) in Base Year	Scaling Exponent	Scaled Cost in Base Year	Installation Factor	Installed Cost in Base Year	Installed Cost in 1997$
A-201	1		In-line Sulfuric Acid Mixer	Flow	0.88	$1,900	1997	$1,900	0.48	$1,785	1	$1,785	$1,785
A-202	1		In-line NH3 Mixer	Flow	1.25	$1,500	1997	$1,500	0.48	$1,669	1	$1,669	$1,669
A-209	1		Overliming Tank Agitator	Flow	1.30	$19,800	1997	$19,800	0.51	$22,663	1.3	$29,462	$29,462
A-224	1		Reacidification Tank Agitator	Flow	1.30	$65,200	1997	$65,200	0.51	$74,629	1.2	$89,555	$89,555
A-232	1		Reslurrying Tank Agitator	Flow	1.01	$36,000	1997	$36,000	0.51	$36,200	1.2	$43,441	$43,441
A-235	1		In-line Acidification Mixer	Flow	1.30	$2,600	1997	$2,600	0.48	$2,953	1	$2,953	$2,953
C-201	1		Hydrolyzate Screw Conveyor	Flow	1.00	$59,400	1997	$59,400	0.78	$59,356	1.3	$77,163	$77,163
C-202	4		Wash Solids Screw Conveyor	Flow	0.75	$23,700	1997	$94,800	1	$70,920	1.3	$92,196	$92,196
C-225	1		Lime Solids Feeder	None		$3,900	1997	$3,900		$3,900	1.3	$5,070	$5,070
H-200	1		Hydrolyzate Cooler	Area	1.31	$45,000	1997	$45,000	0.51	$51,558	2.1	$108,271	$108,271
H-201	2	1	Beer Column Feed Economizer	Area	1.02	$132,800	1997	$398,400	0.68	$403,256	2.1	$846,837	$846,837
M-202	1		Prehydrolysis Reactor System	Flow	1.00	$12,461,841	1998	$12,461,841	0.78	$12,462,882	1.5	$18,694,322	$18,485,000
P-201	1	1	Sulfuric Acid Pump	Flow	1.13	$4,800	1997	$9,600	0.79	$10,598	2.8	$29,673	$29,673
P-209	1	1	Overlimed Hydrolyzate Pump	Flow	1.30	$10,700	1997	$21,400	0.79	$26,380	2.8	$73,863	$73,863
P-222	1	1	Filtered Hydrolyzate Pump	Flow	1.33	$10,800	1997	$21,600	0.79	$27,057	2.8	$75,760	$75,760
P-223	1		Lime Unloading Blower	Flow	1.31	$47,600	1998	$47,600	0.5	$54,382	1.4	$76,134	$75,282
P-224	2	1	Fermentation Feed Pump	Flow	1.01	$61,368	1998	$184,104	0.7	$185,512	2.8	$519,435	$513,618
P-225	1	1	ISEP Elution Pump	Flow	1.25	$7,900	1997	$15,800	0.79	$18,826	2.8	$52,714	$52,714
P-226	1	1	ISEP Reload Pump	Flow	1.30	$8,700	1997	$17,400	0.79	$21,450	2.8	$60,061	$60,061
P-227	1	1	ISEP Hydrolyzate Feed Pump	Flow	1.31	$10,700	1997	$21,400	0.79	$26,456	2.8	$74,078	$74,078
P-239	1	1	Reacidified Liquor Pump	Flow	1.30	$10,800	1997	$21,600	0.79	$26,627	2.8	$74,555	$74,555
S-202	8		Pre-IX Belt Filter Press	Feed Solids	1.03	$200,000	1998	$1,600,000	0.39	$1,619,536	1.4	$2,267,351	$2,241,963
S-221	1		ISEP	Flow	1.00	$2,058,000	1997	$2,058,000	0.33	$2,056,875	1.2	$2,468,250	$2,468,250
S-222	1		Hydroclone & Rotary Drum Filter	Flow	0.47	$165,000	1998	$165,000	0.39	$122,738	1.4	$171,833	$169,909
S-227	1		LimeDust Vent Baghouse	Flow	1.30	$32,200	1997	$32,200	1	$41,952	1.5	$62,928	$62,928
T-201	1		Sulfuric Acid Storage	Flow	1.13	$5,760	1996	$5,760	0.71	$6,295	1.4	$8,813	$8,870
T-203	1		Blowdown Tank	Flow	1.00	$64,100	1997	$64,100	0.93	$64,048	1.2	$76,857	$76,857
T-209	1		Overliming Tank	Flow	1.30	$71,000	1997	$71,000	0.71	$85,687	1.4	$119,962	$119,962
T-220	1		Lime Storage Bin	Flow	1.30	$69,200	1997	$69,200	0.46	$78,155	1.3	$101,602	$101,602
T-224	1		Reacidification Tank	Flow	1.30	$147,800	1997	$147,800	0.51	$169,174	1.2	$203,009	$203,009
T-232	1		Slurrying Tank	Flow	1.01	$44,800	1997	$44,800	0.71	$45,148	1.2	$54,177	$54,177
A200							Subtotal*	$17,808,705		$17,878,668	1.49	$26,563,780	$26,320,534

*Sections are subtotaled and an average "Installation Factor" is back calculated for the section.

Individual Equipment Cost Summary

Equip No.	No. Req'd	No. Spares	Equip Name	Scaled On	Size Ratio (Base/ Current)	Original Equip Cost (per unit)	Base Year	Total Original Equip Cost (Req'd & Spare) in Base Year	Scaling Exponent	Scaled Cost in Base Year	Installation Factor	Installed Cost in Base Year	Installed Cost in 1997$
A-300	34		SSCF Fermentor Agitators			$19,676	1996	$668,984		$668,984	1.2	$802,781	$807,919
A-301	1		Seed Hold Tank Agitator	Flow	0.91	$12,551	1996	$12,551	0.51	$11,958	1.2	$14,350	$14,442
A-304	2		4th Seed Vessel Agitator	Flow	0.91	$11,700	1997	$23,400	0.51	$22,295	1.2	$26,754	$26,754
A-305	2		5th Seed Vessel Agitator	Flow	0.91	$10,340	1996	$20,680	0.51	$19,704	1.2	$23,644	$23,796
A-306	1		Beer Surge Tank Agitator	Flow	1.00	$10,100	1997	$10,100	0.51	$10,080	1.2	$12,096	$12,096
F-300	17		SSCF Fermentors	None		$493,391	1998	$8,387,647		$8,387,647	1.2	$10,065,176	$9,952,475
F-301	2		1st SSCF Seed Fermentor	None		$14,700	1997	$29,400		$29,400	2.8	$82,320	$82,320
F-302	2		2nd SSCF Seed Fermentor	None		$32,600	1997	$65,200		$65,200	2.8	$182,560	$182,560
F-303	2		3rd SSCF Seed Fermentor	None		$81,100	1997	$162,200		$162,200	2.8	$454,160	$454,160
F-304	2		4th SSCF Seed Fermentor	Flow	0.91	$39,500	1997	$79,000	0.93	$72,331	1.2	$86,798	$86,798
F-305	2		5th SSCF Seed Fermentor	Flow	0.91	$147,245	1998	$294,490	0.51	$280,587	1.2	$336,704	$332,934
H-300	17	1	Fermentation Cooler	Heat Duty	1.33	$4,000	1997	$72,000	0.78	$89,761	2.1	$188,499	$188,499
H-301	1		SSCF Seed Hydrolyzate Cooler	Area	0.91	$15,539	1998	$15,539	0.78	$14,414	2.1	$30,270	$29,931
H-302	3		SSCF Hydrolyzate Cooler	Area	0.98	$25,409	1998	$76,227	0.78	$75,201	2.1	$157,922	$156,154
H-304	1		4TH Seed Fermentor Coils	Heat Duty	0.92	$3,300	1997	$3,300	0.83	$3,066	1.2	$3,679	$3,679
H-305	1		5TH Seed Fermentor Coils	Heat Duty	0.92	$18,800	1997	$18,800	0.98	$17,234	1.2	$20,681	$20,681
P-300	17	1	SSCF Recirculation and Transfer Pump	Heat Duty	1.33	$8,000	1997	$144,000	0.79	$180,205	2.8	$504,574	$504,574
P-301	1	1	SSCF Seed Transfer Pump	Flow	0.91	$22,194	1998	$44,388	0.7	$41,537	1.4	$58,152	$57,501
P-302	2		Seed Transfer Pump	Flow	0.91	$54,088	1998	$108,176	0.7	$101,228	1.4	$141,720	$140,133
P-306	1	1	Beer Transfer Pump	Flow	1.00	$17,300	1997	$34,600	0.79	$34,493	2.8	$96,581	$96,581
T-301	1		SSCF Seed Hold Tank	Flow	0.91	$161,593	1998	$161,593	0.51	$153,964	1.2	$184,757	$182,688
T-306	1		Beer Storage Tank	Flow	1.00	$34,900	1997	$34,900	0.71	$34,803	1.2	$41,764	$41,764
A300							Subtotal*	$10,467,175		$10,476,292	1.29	$13,515,939	$13,398,435

*Sections are subtotaled and an average "Installation Factor" is back calculated for the section.

Individual Equipment Cost Summary

Equip No.	No. Req'd	No. Spares	Equip Name	Scaled On	Size Ratio (Base/ Current)	Original Equip Cost (per unit)	Base Year	Total Original Equip Cost (Req'd & Spare) in Base Year	Scaling Exponent	Scaled Cost in Base Year	Installation Factor	Installed Cost in Base Year	Installed Cost in 1997$
A-400	11		Cellulase Fermentor Agitators	None		$550,000	1998	$6,050,000		$6,050,000	1.2	$7,260,000	$7,178,709
F-400	11		Cellulase Fermentors	None		$179,952	1998	$1,979,472		$1,979,472	1	$1,979,472	$1,957,308
F-401	3		1st Cellulase Seed Fermentor	Flow	0.92	$22,500	1997	$67,500	0.93	$62,772	2	$125,545	$125,545
F-402	3		2nd Cellulase Seed Fermentor	Flow	0.92	$54,100	1997	$162,300	0.93	$150,933	2	$301,866	$301,866
F-403	3		3rd Cellulase Seed Fermentor	Flow	0.92	$282,100	1997	$846,300	0.93	$787,028	2	$1,574,055	$1,574,055
H-400	11		Cellulase Fermentation Cooler	Heat Duty	1.00	$34,400	1997	$378,400	0.78	$378,222	2.1	$794,266	$794,266
M-401	2	1	Fermentor Air Compressor Package	Flow	3.10	$596,342	1998	$1,789,026	0.34	$2,626,951	1.3	$3,415,036	$3,376,798
P-400	1	1	Cellulase Transfer Pump	Flow	0.97	$9,300	1997	$18,600	0.79	$18,118	2.8	$50,730	$50,730
P-401	1	1	Cellulase Seed Pump	Flow	0.92	$12,105	1998	$24,210	0.7	$22,922	1.2	$27,507	$27,199
P-405	1	1	Media Pump	Flow	0.99	$8,300	1997	$16,600	0.79	$16,469	2.8	$46,115	$46,115
P-420	1	1	Anti-foam Pump	Flow	1.00	$5,500	1997	$11,000	0.79	$10,997	2.8	$30,792	$30,792
T-405	1		Media-Prep Tank	Flow	0.99	$64,600	1997	$64,600	0.71	$64,143	1.2	$76,972	$76,972
T-420	1		Anti-foam Tank	Flow	1.00	$402	1998	$402	0.71	$402	1.2	$482	$477
A400							Subtotal*	$11,408,410		$12,168,430	1.29	$15,682,838	$15,540,831

*Sections are subtotaled and an average "Installation Factor" is back calculated for the section.

Individual Equipment Cost Summary

Equip No.	No. Req'd	No. Spares	Equip Name	Scaled On	Size Ratio (Base/ Current)	Original Equip Cost (per unit)	Base Year	Total Original Equip Cost (Req'd & Spare) in Base Year	Scaling Exponent	Scaled Cost in Base Year	Installation Factor	Installed Cost in Base Year	Installed Cost in 1997$
D-501	1		Beer Column	Deameter	0.94	$636,976	1996	$636,976	0.78	$604,672	2.1	$1,269,811	$1,277,938
D-502	1		Rectification Column	Flow	0.99	$525,800	1996	$525,800	0.78	$521,461	2.1	$1,095,069	$1,102,077
E-501	2		1st Effect Evaporation	Area	1.23	$544,595	1996	$1,089,190	0.68	$1,256,849	2.1	$2,639,383	$2,656,275
E-502	1		2nd Effect Evaporation	Area	1.23	$435,650	1996	$435,650	0.68	$502,710	2.1	$1,055,690	$1,062,446
E-503	2		3rd Effect Evaporation	Area	1.23	$435,650	1996	$871,300	0.68	$1,005,419	2.1	$2,111,380	$2,124,893
H-501	1		Beer Column Reboiler	Heat Duty	0.99	$158,374	1996	$158,374	0.68	$157,438	2.1	$330,619	$332,735
H-502	1		Rectification Column Reboiler	Heat Duty	0.99	$29,600	1997	$29,600	0.68	$29,355	2.1	$61,646	$61,646
H-504	1		Beer Column Condenser	Heat Duty	0.89	$29,544	1996	$29,544	0.68	$27,278	2.1	$57,283	$57,650
H-505	1		Rectification Column Condenser	Heat Duty	0.99	$86,174	1996	$86,174	0.68	$85,460	2.1	$179,466	$180,615
H-512	1	1	Beer Column Feed Interchange	Area	1.00	$19,040	1996	$38,080	0.68	$38,034	2.1	$79,872	$80,383
H-517	1	1	Evaporator Condenser	Heat Duty	1.18	$121,576	1996	$243,152	0.68	$271,888	2.1	$570,965	$574,620
M-503	1		Molecular Sieve (9 pieces)	Flow	0.91	$2,700,000	1998	$2,700,000	0.7	$2,519,007	1	$2,519,007	$2,490,801
P-501	1	1	Beer Column Bottoms Pump	Flow	1.00	$42,300	1997	$84,600	0.79	$84,767	2.8	$237,347	$237,347
P-503	1	1	Beer Column Reflux Pump	Heat Duty	0.89	$1,357	1998	$2,714	0.79	$2,474	2.8	$6,926	$6,849
P-504	1	1	Rectification Column Bottoms Pump	Flow	0.98	$4,916	1998	$9,832	0.79	$9,682	2.8	$27,109	$26,805
P-505	1	1	Rectification Column Reflux Pump	Heat Duty	0.99	$4,782	1998	$9,564	0.79	$9,471	2.8	$26,518	$26,221
P-511	2	1	1st Effect Pump	Flow	0.97	$19,700	1997	$59,100	0.79	$57,534	2.8	$161,095	$161,095
P-512	1	1	2nd Effect Pump	Flow	0.83	$13,900	1997	$27,800	0.79	$24,082	2.8	$67,430	$67,430
P-513	2	1	3rd Effect Pump	Flow	0.51	$8,000	1997	$24,000	0.79	$14,049	2.8	$39,337	$39,337
P-514	1	1	Evaporator Condensate Pump	Flow	1.18	$12,300	1997	$24,600	0.79	$27,943	2.8	$78,239	$78,239
P-515	1		Scrubber Bottoms Pump	Flow	0.88	$2,793	1998	$2,793	0.79	$2,529	2.8	$7,082	$7,003
T-503	1		Beer Column Relfux Drum	Heat Duty	0.89	$11,900	1997	$11,900	0.93	$10,669	2.1	$22,406	$22,406
T-505	1		Rectification Column Reflux Drum	Heat Duty	0.99	$45,600	1997	$45,600	0.72	$45,194	2.1	$94,908	$94,908
T-512	1		Vent Scrubber	Flow	1.00	$99,000	1998	$99,000	0.78	$98,640	2.1	$207,145	$204,825
A500							Subtotal*	$7,245,343		$7,406,605	1.75	$12,945,735	$12,974,545

*Sections are subtotaled and an average "Installation Factor" is back calculated for the section.

Individual Equipment Cost Summary

Equip No.	No. Req'd	No. Spares	Equip Name	Scaled On	Size Ratio (Base/ Current)	Original Equip Cost (per unit)	Base Year	Total Original Equip Cost (Req'd & Spare) in Base Year	Scaling Exponent	Scaled Cost in Base Year	Installation Factor	Installed Cost in Base Year	Installed Cost in 1997$
A-602	1		Equalization Basin Agitator	Flow	0.95	$28,400	1997	$28,400	0.51	$27,716	1.2	$33,259	$33,259
A-606	4		Anaerobic Agitator	Volume	1.02	$30,300	1997	$121,200	0.51	$122,516	1.2	$147,019	$147,019
A-608	16		Aerobic Lagoon Agitators	Power	1.02	$31,250	1998	$500,000	0.51	$505,650	1.4	$707,910	$699,983
A-630	1		Recycled Water Tank Agitator	Flow	0.95	$5,963	1998	$5,963	0.51	$5,819	1.3	$7,565	$7,480
C-601	1		Lignin Wet Cake Screw	Flow	0.99	$31,700	1997	$31,700	0.78	$31,470	1.4	$44,058	$44,058
C-614	1		Aerobic Sludge Screw	Flow	0.94	$5,700	1997	$5,700	0.78	$5,424	1.4	$7,594	$7,594
H-602	1		Anaerobic Digestor Feed Cooler	Area	0.98	$128,600	1997	$128,600	0.74	$126,409	2.1	$265,459	$265,459
M-604	1		Nutrient Feed System	None		$31,400	1998	$31,400		$31,400	2.58	$81,012	$80,105
M-606	1		Biogas Emergency Flare	Flow	1.02	$20,739	1998	$20,739	0.6	$21,028	1.68	$35,326	$34,931
M-612	1		Filter Precoat System	None		$3,000	1998	$3,000		$3,000	1.4	$4,200	$4,153
P-602	1	1	Anaerobic Reactor Feed Pump	Flow	0.95	$11,400	1997	$22,800	0.79	$21,955	2.8	$61,474	$61,474
P-606	1	1	Aerobic Digestor Feed Pump	Flow	0.95	$10,700	1997	$21,400	0.79	$20,592	2.8	$57,657	$57,657
P-608	1		Aerobic Sludge Recycle Pump	Flow	0.94	$11,100	1997	$11,100	0.79	$10,574	1.4	$14,804	$14,804
P-610	1		Aerobic Sludge Pump	Flow	0.94	$11,100	1997	$11,100	0.79	$10,574	1.4	$14,804	$14,804
P-611	1	1	Aerobic Digestion Outlet Pump	Flow	0.95	$10,700	1997	$21,400	0.79	$20,571	2.8	$57,599	$57,599
P-614	1	1	Sludge Filtrate Recycle Pump	Flow	0.94	$6,100	1997	$12,200	0.79	$11,625	2.8	$32,551	$32,551
P-616	1	1	Treated Water Pump	Flow	0.95	$10,600	1997	$21,200	0.79	$20,385	2.8	$57,078	$57,078
P-630	1	1	Recycled Water Pump	Flow	0.95	$10,600	1997	$21,200	0.79	$20,413	2.8	$57,156	$57,156
S-600	1		Bar Screen	Flow	0.95	$117,818	1991	$117,818	0.3	$116,140	1.2	$139,368	$148,180
S-601	3		Beer Column Bottoms Centrifuge	Flow	0.96	$659,550	1998	$1,978,650	0.6	$1,928,354	1.2	$2,314,025	$2,288,115
S-614	1		Belt Filter Press	COD	1.02	$650,223	1998	$650,223	0.72	$660,062	1.8	$1,188,111	$1,174,807
T-602	1		Equalization Basin	Flow	0.95	$350,800	1998	$350,800	0.51	$342,350	1.42	$486,137	$480,693
T-606	4		Anaerobic Digestor	Volume	1.02	$881,081	1998	$3,524,324	0.51	$3,562,594	1.04	$3,705,098	$3,663,612
T-608	1		Aerobic Digestor	Volume	0.95	$635,173	1998	$635,173	1	$606,356	1	$606,356	$599,566
T-610	1		Clarifier	Flow	0.95	$174,385	1998	$174,385	0.51	$170,104	1.96	$333,403	$329,670
T-630	1		Recycled Water Tank	Flow	0.95	$14,515	1998	$14,515	0.745	$14,006	1.4	$19,609	$19,389
A600							Subtotal*	$8,464,990		$8,417,087	1.24	$10,478,632	$10,381,196

*Sections are subtotaled and an average "Installation Factor" is back calculated for the section.

Individual Equipment Cost Summary

Equip No.	No. Req'd	No. Spares	Equip Name	Scaled On	Size Ratio (Base/ Current)	Original Equip Cost (per unit)	Base Year	Total Original Equip Cost (Req'd & Spare) in Base Year	Scaling Exponent	Scaled Cost in Base Year	Installation Factor	Installed Cost in Base Year	Installed Cost in 1997$
A-701	1		Denaturant In-line Mixer	Flow	1.00	$1,900	1997	$1,900	0.48	$1,899	1	$1,899	$1,899
P-701	2	1	Ethanol Product Pump	Flow	1.00	$7,500	1997	$22,500	0.79	$22,508	2.8	$63,022	$63,022
P-703	1	1	Sulfuric Acid Pump	Flow	1.13	$8,000	1997	$16,000	0.79	$17,663	2.8	$49,456	$49,456
P-704	1	1	Firewater Pump	Flow	1.00	$18,400	1997	$36,800	0.79	$36,811	2.8	$103,072	$103,072
P-706	1	1	Ammonia Pump	Flow	1.20	$5,000	1997	$10,000	0.79	$11,581	2.8	$32,427	$32,427
P-707	1	1	Antifoam Store Pump	Flow	1.00	$5,700	1997	$11,400	0.79	$11,397	2.8	$31,912	$31,912
P-708	1	1	Diesel Pump	Flow	1.00	$6,100	1997	$12,200	0.79	$12,201	2.8	$34,162	$34,162
P-710	1	1	Gasoline Pump	Flow	0.98	$4,500	1997	$9,000	0.79	$8,833	2.8	$24,732	$24,732
P-720	1	1	CSL Pump	Flow	0.97	$8,800	1997	$17,600	0.79	$17,178	2.8	$48,100	$48,100
T-701	2		Ethanol Product Storage Tank	Flow	1.00	$165,800	1997	$331,600	0.51	$331,675	1.4	$464,345	$464,345
T-703	1		Sulfuric Acid Storage Tank	Flow	1.13	$42,500	1997	$42,500	0.51	$45,301	1.2	$54,361	$54,361
T-704	1		Firewater Storage Tank	Flow	1.00	$166,100	1997	$166,100	0.51	$166,146	1.4	$232,604	$232,604
T-706	1		Ammonia Storage Tank	Flow	1.20	$287,300	1997	$287,300	0.72	$328,423	1.4	$459,792	$459,792
T-707	1		Antifoam Storage Tank	Flow	1.00	$14,400	1997	$14,400	0.71	$14,397	1.4	$20,155	$20,155
T-708	1		Diesel Storage Tank	Flow	1.00	$14,400	1997	$14,400	0.51	$14,400	1.4	$20,161	$20,161
T-710	1		Gasoline Storage Tank	Flow	0.98	$43,500	1997	$43,500	0.51	$42,977	1.4	$60,167	$60,167
T-720	1		CSL Storage Tank	Flow	0.97	$88,100	1997	$88,100	0.79	$85,990	1.4	$120,386	$120,386
A700							Subtotal*	$1,125,300		$1,169,380	1.56	$1,820,753	$1,820,753

*Sections are subtotaled and an average "Installation Factor" is back calculated for the section.

Individual Equipment Cost Summary

Equip No.	No. Req'd	No. Spares	Equip Name	Scaled On	Size Ratio (Base/ Current)	Original Equip Cost (per unit)	Base Year	Total Original Equip Cost (Req'd & Spare) in Base Year	Scaling Exponent	Scaled Cost in Base Year	Installation Factor	Installed Cost in Base Year	Installed Cost in 1997$
H-811	1		BFW Preheater	Area	1.03	$58,400	1997	$58,400	0.68	$59,609	2.1	$125,178	$125,178
M-801	1		Solid Feed Rotary Dryer	Flow	1.00	$1,620,000	1998	$1,620,000	0.45	$1,621,871	1.6	$2,594,994	$2,565,938
M-803	1		Fluidized Bed Combustion Reactor	Flow	0.69	$24,900,000	1998	$24,900,000	0.75	$18,835,267	1.3	$24,485,847	$24,211,676
M-804	1		Combustion Gas Baghouse	Flow	0.22	$2,536,300	1998	$2,536,300	0.58	$1,061,116	1.5	$1,591,674	$1,573,852
M-811	1		Turbine/Generator	Flow	0.84	$10,000,000	1998	$10,000,000	0.71	$8,809,671	1.5	$13,214,507	$13,066,543
M-820	1		Hot Process Water Softener System	Flow	0.96	$1,381,300	1999	$1,381,300	0.82	$1,334,444	1.3	$1,734,777	$1,696,358
M-830	1		Hydrazine Addition Pkg.	Flow	1.06	$19,000	1994	$19,000	0.6	$19,645	1	$19,645	$20,501
M-832	1		Ammonia Addition Pkg	Flow	1.06	$19,000	1994	$19,000	0.6	$19,645	1	$19,645	$20,501
M-834	1		Phosphate Addition Pkg.	Flow	1.06	$19,000	1994	$19,000	0.6	$19,645	1	$19,645	$20,501
P-804	2		Condensate Pump	Flow	2.36	$7,100	1997	$14,200	0.79	$28,010	2.8	$78,427	$78,427
P-811	2		Turbine Condensate Pump	Flow	1.40	$7,800	1997	$15,600	0.79	$20,401	2.8	$57,123	$57,123
P-824	2		Deaerator Feed Pump	Flow	0.74	$9,500	1997	$19,000	0.79	$14,940	2.8	$41,833	$41,833
P-826	5		BFW Pump	Flow	0.43	$52,501	1998	$262,505	0.79	$134,639	2.8	$376,988	$372,767
P-828	2		Blowdown Pump	Flow	1.10	$5,100	1997	$10,200	0.79	$10,999	2.8	$30,796	$30,796
P-830	1		Hydrazine Transfer Pump	Flow	1.06	$5,500	1997	$5,500	0.79	$5,747	2.8	$16,091	$16,091
T-804	1		Condensate Collection Tank	Flow	0.63	$7,100	1997	$7,100	0.71	$5,141	1.4	$7,198	$7,198
T-824	1		Condensate Surge Drum	Flow	0.97	$49,600	1997	$49,600	0.72	$48,668	1.7	$82,736	$82,736
T-826	1		Deaerator	Flow	0.91	$165,000	1998	$165,000	0.72	$154,281	2.8	$431,986	$427,149
T-828	1		Blowdown Flash Drum	Flow	1.11	$9,200	1997	$9,200	0.72	$9,908	2.8	$27,743	$27,743
T-830	1		Hydrazine Drum	Flow	1.06	$12,400	1997	$12,400	0.93	$13,058	1.7	$22,199	$22,199
A800							Subtotal*	$41,123,305		$32,226,704	1.40	$44,979,031	$44,465,109

*Sections are subtotaled and an average "Installation Factor" is back calculated for the section.

Individual Equipment Cost Summary

Equip No.	No. Req'd	No. Spares	Equip Name	Scaled On	Size Ratio (Base/ Current)	Original Equip Cost (per unit)	Base Year	Total Original Equip Cost (Req'd & Spare) in Base Year	Scaling Exponent	Scaled Cost in Base Year	Installation Factor	Installed Cost in Base Year	Installed Cost in 1997$
M-902	1		Cooling Tower System	Flow	0.79	$1,659,000	1998	$1,659,000	0.78	$1,374,359	1.2	$1,649,231	$1,630,764
M-904	2	1	Plant Air Compressor	Flow	1.00	$60,100	1997	$180,300	0.34	$180,299	1.3	$234,389	$234,389
M-908	3		Chilled Water Package	Flow	0.96	$380,000	1997	$1,140,000	0.8	$1,104,036	1.2	$1,324,844	$1,324,844
M-910	1		CIP System	Flow	1.00	$95,000	1995	$95,000	0.6	$95,036	1.2	$114,043	$114,954
P-902	1	1	Cooling Water Pumps	Flow	0.76	$332,300	1997	$664,600	0.79	$533,245	2.8	$1,493,085	$1,493,085
P-912	1	1	Make-up Water Pump	Flow	0.76	$10,800	1997	$21,600	0.79	$17,392	2.8	$48,698	$48,698
P-914	2	1	Process Water Circulating Pump	Flow	0.78	$11,100	1997	$33,300	0.79	$27,307	2.8	$76,460	$76,460
S-904	1	1	Instrument Air Dryer	Flow	1.00	$15,498	1999	$30,996	0.6	$30,996	1.3	$40,294	$39,402
T-904	1		Plant Air Receiver	Flow	1.00	$13,000	1997	$13,000	0.72	$13,000	1.3	$16,900	$16,900
T-914	1		Process Water Tank	Flow	0.78	$195,500	1997	$195,500	0.51	$171,996	1.4	$240,795	$240,795
							Subtotal*	$4,033,296		$3,547,667	1.40	$5,238,739	$5,220,291
					Total Equipment Cost			$105,540,303		$97,154,612	1.40	$136,186,198	$135,025,047

*Sections are subtotaled and an average "Installation Factor" is back calculated for the section.

Appendix C

Chemical Costs and Sources

Raw Material	Cost ($/lb)	Reference
H2SO4	$0.0125	$25/ton -- tanks, works, Chemical Marketing Reporter 2 Nov 98
Lime	$0.035	$70/ton -- bulk, fob plants, Chemical Marketing Reporter 2 Nov 98
NH3	$0.0875	$175/ton -- anhydrous, fertilizer grade, wholesale tanks, Delivered to Midwest Terminals, Chemical Marketing Reporter 2 Nov 98
Corn Steep Liq	$0.075	Analysis of CSL market -- Ruth, M. Report to Process Engineering Team, 5 June 1998
Nutrients	$0.124	Schell, 1991. P. 48
Ammonium Sulfate	$0.0225	$45/ton -- standard commercial, fob works, Chemical Marketing Reporter 2 Nov 98
Antifoam	$0.249	Corn Oil -- crude, tank cars, fob Decatur, US Dept. of Agriculture, Agricultural Statistics 1998 Table 3-56
Gasoline	$0.0898	$0.515 / gal -- Density of 0.6875 g/mL, DOE Energy Information Administration Average Cost of Wholesale Unleaded Gasoline in July 1997
Diesel	$0.0615	$0.426 / gal -- Density of 0.83 g/mL, DOE Energy Information Administration Average Cost of Wholesale #2 Diesel in July 1998
Makeup Water	$0.00012	$1/1000 gal: Middle of Range $0.35-$1.50/1000 gal Peters & Timmerhaus, p 815
BFW Chemicals	$0.97	Radian Report, Cases
CW Chemicals	$1.00	Unknown
WWT Nutrients	$0.11	Merrick Report Appendix G
WWT Chemicals	$2.50	Merrick Report Appendix G
Utility		
Solid Disposal	$0.01	$20/ton -- Chem Systems Report 1993

Appendix D
Discounted Cash Flow Rate of Return Summary

Discounted Cash Flow Rate of Return

Year		-2	-1	0	1	2	3	4	5	6	7	8	9	10
Fixed Capital Investment		$18,706,738	$140,300,534	$74,826,951										
Working Capital				$11,691,711										
Ethanol Sales					$56,344,666	$75,126,221	$75,126,221	$75,126,221	$75,126,221	$75,126,221	$75,126,221	$75,126,221	$75,126,221	$75,126,221
By-Product Credit					$2,801,911	$3,735,882	$3,735,882	$3,735,882	$3,735,882	$3,735,882	$3,735,882	$3,735,882	$3,735,882	$3,735,882
Total Annual Sales					$59,146,578	$78,862,103	$78,862,103	$78,862,103	$78,862,103	$78,862,103	$78,862,103	$78,862,103	$78,862,103	$78,862,103
Annual Manufacturing Cost														
Raw Materials					$16,894,022	$19,307,454	$19,307,454	$19,307,454	$19,307,454	$19,307,454	$19,307,454	$19,307,454	$19,307,454	$19,307,454
Ion Exchange Resin					$716,376					$716,376				
Baghouse Bags					$341,730					$341,730				
Other Variable Costs					$8,367,094	$9,562,393	$9,562,393	$9,562,393	$9,562,393	$9,562,393	$9,562,393	$9,562,393	$9,562,393	$9,562,393
Fixed Operating Costs					$7,484,090	$7,484,090	$7,484,090	$7,484,090	$7,484,090	$7,484,090	$7,484,090	$7,484,090	$7,484,090	$7,484,090
Total Product Cost					$33,803,313	$36,353,937	$36,353,937	$36,353,937	$36,353,937	$37,412,043	$36,353,937	$36,353,937	$36,353,937	$36,353,937
Annual Depreciation														
General Plant														
DDB					$44,808,645	$32,006,175	$22,861,553	$16,329,681	$11,664,058	$8,331,470	$5,951,050			
SL					$22,404,322	$18,670,269	$16,003,087	$14,288,471	$13,608,067	$13,608,067	$13,608,067			
Remaining Value					$112,021,612	$80,015,437	$57,153,883	$40,824,202	$29,160,145	$20,828,675	$14,877,625			
Actual					$44,808,645	$32,006,175	$22,861,553	$16,329,681	$13,608,067	$13,608,067	$13,608,067			
Steam Plant														
DDB					$5,775,298	$5,342,150	$4,941,489	$4,570,877	$4,228,061	$3,910,957	$3,617,635	$3,346,312	$3,095,339	$2,863,189
SL					$3,850,198	$3,748,877	$3,660,362	$3,585,002	$3,523,385	$3,476,406	$3,445,367	$3,432,115	$3,432,115	$3,432,115
Remaining Value					$71,228,669	$65,886,519	$60,945,030	$56,374,153	$52,146,092	$48,235,135	$44,617,500	$41,271,187	$38,175,848	$35,312,659
Actual					$5,775,298	$5,342,150	$4,941,489	$4,570,877	$4,228,061	$3,910,957	$3,617,635	$3,432,115	$3,432,115	$3,432,115
Taxable Income					-$25,240,677	$5,159,842	$14,705,124	$21,607,608	$24,672,038	$23,931,036	$25,282,464	$39,076,051	$39,076,051	$39,076,051
Income Tax					$0	$2,012,338	$5,734,998	$8,426,967	$9,622,095	$9,333,104	$9,860,161	$15,239,660	$15,239,660	$15,239,660
Annual Cash Income					$25,343,265	$40,495,828	$36,773,168	$34,081,199	$32,886,072	$32,116,956	$32,648,006	$27,268,507	$27,268,507	$27,268,507
Discount Factor		1.21	1.10	1.00	0.91	0.83	0.75	0.68	0.62	0.56	0.51	0.47	0.42	0.39
Annual Present Value	$261,746,504				$23,039,332	$33,467,627	$27,628,226	$23,277,918	$20,419,663	$18,129,184	$16,753,589	$12,720,960	$11,564,509	$10,513,190
Total Capital Investment + Interest		$22,635,153	$154,330,587	$86,518,663										
Net Present Worth				0										

Year	11	12	13	14	15	16	17	18	19	20
Fixed Capital Investment										
Working Capital										-$11,691,711
Ethanol Sales	$75,126,221	$75,126,221	$75,126,221	$75,126,221	$75,126,221	$75,126,221	$75,126,221	$75,126,221	$75,126,221	$75,126,221
By-Product Credit	$3,735,882	$3,735,882	$3,735,882	$3,735,882	$3,735,882	$3,735,882	$3,735,882	$3,735,882	$3,735,882	$3,735,882
Total Annual Sales	$78,862,103	$78,862,103	$78,862,103	$78,862,103	$78,862,103	$78,862,103	$78,862,103	$78,862,103	$78,862,103	$78,862,103
Annual Manufacturing Cost										
Raw Materials	$19,307,454	$19,307,454	$19,307,454	$19,307,454	$19,307,454	$19,307,454	$19,307,454	$19,307,454	$19,307,454	$19,307,454
Ion Exchange Resin	$716,376					$716,376				
Baghouse Bags	$341,730					$341,730				
Other Variable Costs	$9,562,393	$9,562,393	$9,562,393	$9,562,393	$9,562,393	$9,562,393	$9,562,393	$9,562,393	$9,562,393	$9,562,393
Fixed Operating Costs	$7,484,090	$7,484,090	$7,484,090	$7,484,090	$7,484,090	$7,484,090	$7,484,090	$7,484,090	$7,484,090	$7,484,090
Total Product Cost	$37,412,043	$36,353,937	$36,353,937	$36,353,937	$36,353,937	$37,412,043	$36,353,937	$36,353,937	$36,353,937	$36,353,937
Annual Depreciation										
General Plant										
DDB										
SL										
Remaining Value										
Actual										
Steam Plant										
DDB	$2,648,449	$2,449,816	$2,266,080	$2,096,124	$1,938,914	$1,793,496	$1,658,984	$1,534,560	$1,419,468	$1,313,008
SL	$3,432,115	$3,432,115	$3,432,115	$3,432,115	$3,432,115	$3,432,115	$3,432,115	$3,432,115	$3,432,115	$3,432,115
Remaining Value	$32,664,210	$30,214,394	$27,948,315	$25,852,191	$23,913,277	$22,119,781	$20,460,797	$18,926,238	$17,506,770	$16,193,762
Actual	$3,432,115	$3,432,115	$3,432,115	$3,432,115	$3,432,115	$3,432,115	$3,432,115	$3,432,115	$3,432,115	$3,432,115
Taxable Income	$38,017,945	$39,076,051	$39,076,051	$39,076,051	$39,076,051	$38,017,945	$39,076,051	$39,076,051	$39,076,051	$39,076,051
Income Tax	$14,826,998	$15,239,660	$15,239,660	$15,239,660	$15,239,660	$14,826,998	$15,239,660	$15,239,660	$15,239,660	$15,239,660
Annual Cash Income	$26,623,062	$27,268,507	$27,268,507	$27,268,507	$27,268,507	$26,623,062	$27,268,507	$27,268,507	$27,268,507	$27,268,507
Discount Factor	0.35	0.32	0.29	0.26	0.24	0.22	0.20	0.18	0.16	0.15
Annual Present Value	$9,331,221	$8,688,587	$7,898,715	$7,180,650	$6,527,864	$5,793,954	$5,394,929	$4,904,481	$4,458,619	$4,053,290
Total Capital Investment + Interest										-$1,737,898

Ethanol Production Process Engineering Analysis

NREL Year 2000 Case Co-Current Pretreatment & Enzymatic Hydrolysis

All Values in 1997$

Ethanol Production Cost **$1.44**

Ethanol Production (MM Gal. / Year)	52.2	Ethanol at 68°F
Ethanol Yield (Gal / Dry US Ton Feedstock)	68	
Feedstock Cost $/Dry US Ton	25	

Capital Costs	
Feed Handling	$4,900,000
Pretreatment/Detox	$26,300,000
SSCF	$13,400,000
Cellulase	$15,500,000
Distillation	$13,000,000
WWT	$10,400,000
Storage	$1,800,000
Boiler/Turbogen	$44,500,000
Utilities	$5,200,000
Total Equipment Cost	$135,000,000
Added Costs	$98,800,000
(% of TPI)	42%
Total Project Investment	$233,800,000

Operating Costs (cents/gal ethanol)	
Feedstock	37.0
CSL	5.1
Other Raw Materials	12.0
Waste Disposal	1.2
Electricity	-7.2
Fixed Costs	14.3
Capital Recovery	81.4

Operating Costs ($/yr)	
Feedstock	$19,300,000
CSL	$2,700,000
Other Raw Matl. Costs	$6,300,000
Waste Disposal	$600,000
Electricity Credit	-$3,700,000
Fixed Costs	$7,500,000
Capital Recovery	$42,500,000
Cap. Recovery Factor	0.182
Excess Electricity (KWH/ga	1.762
Boiler Feed -- LHV (Btu/lb)	4,144
Boiler Feed -- Water Fracti	0.523

Theoretical Yields	Ethanol MM Gal/year
Cellulose	56.8
Xylan	26.0
Arabinan	1.1
Mannan	5.2
Galactan	0.3
Total Maximum (MM Gal/y	89.4
Maximum Yield (Gal/ton)	115.8
Current Yield (Actual/Theo	58%

File: r9906a.xls

Ethanol Production Rate (MM gal/yr)	52.20	18,557	Feedstock Dry Tons/yr	772165								
			gal/ton	68								
Operating Hours per Year	8,406											
Resin Charge	**Stream No.**	**Acetic Acid**		**Sulfuric Acid**	**Base Resin,CF**	**Base Acetic**	**Base H2SO4**	**Resin Required, CF**				
	ACET220A	3,803	SULF220	921	2500	1,748	357	5731				
Variable Operating Costs												
Raw Material	**Stream No.**	**kg/hr**	**lb/hr**	**1995 Cost ($/lb)**	**$/hour**	**MM$/yr (1995)**	**Cents/Gallon Ethanol (1995)**	**MM$/yr (1997)**	**Cents/Gallon Ethanol (1997)**			
Feedstock	STRM0101	159,948	352,685	0.006513	2,297	19.31	36.99	19.31	36.99			
H2SO4	STRM0710	1,867	4,116	0.0120	49	0.41	0.79	0.42	0.80			
Lime	STRM0745	714	1,574	0.0335	53	0.44	0.85	0.45	0.86			
NH3	STRM0717	1,419	3,128	0.0837	262	2.20	4.22	2.23	4.28			
Corn Steep Liq	STRM0735	1,977	4,360	0.072	313	2.63	5.04	2.67	5.12			
Nutrients	STRM0415	174	385	0.132	51	0.43	0.82	0.43	0.83			
Ammonium	STRM0420	392	865	0.02	19	0.16	0.30	0.16	0.30	1.4 g/L is calculated in Nutrien		11.4
Antifoam	STRM0417	227	500	0.2412	121	1.01	1.94	1.03	1.97			
Diesel	STRM0723	443	977	0.0588	57	0.48	0.93	0.49	0.94			
Makeup Water	STRM0903	185,593	409,232	#######	53	0.45	0.85	0.45	0.87			
BFW	STRM0921	0	1	1.49	2	0.01	0.02	0.01	0.02	**$1.40/lb avg cost in Radian report, 199**		
CW Chemicals	STRM0922	5	12	1.00	12	0.10	0.19	0.10	0.19			
WWT Nutrients	STRM0630	230	508	0.11	53	0.45	0.86	0.46	0.87			
WWT	STRM0631	0.76	1.68	2.39	4	0.03	0.06	0.03	0.07			
Subtotal					**3,345**	**28.12**	**53.86**	**28.25**	**54.12**			
Waste Streams												
Solids Disposal	STRM0809	1,106	2,438	0.01	23	0.19	0.36	0.19	0.37	**$20/metric ton in CSI report, 1993**		
Solids Disposal	STRM0229	2,433	5,364	0.01	50	0.42	0.80	0.42	0.81	**$20/metric ton in CSI report, 1993**		
Subtotal					**72**	**0.61**	**1.17**	**0.62**	**1.18**			
By-Product Credits		KW										
Electricity	WRKWKN	10,942	na	0.040	438	3.68	7.05	3.74	7.16			
Subtotal												
Total Variable Operating					**2,979**	**25.05**	**47.98**	**25.13**	**48.15**			
Fixed Operating												
Plant Manager	80000	1	80,000									
Plant Engineer	65000	1	65,000									
Supr	60000	1	60,000									
Lab Manager	50000	1	50,000									
Shift Supervisor	37000	5	185,000									
Lab Technician	25000	2	50,000									
Tech	28000	8	224,000									
Shift Operators	25000	20	500,000									
Employees	20000	8	160,000									
Manager	100000	1	100,000									
Secretaries	20000	5	100,000									
Total Salaries			1,574,000		1.574	1.57	3.02	1.68	3.23			
t		60%	944,400		0.944	0.94	1.81	0.94	1.81	of Labor & Supervison		
Maintenance		2%	2,700,501		2.701	2.70	5.17	2.70	5.17	Installed Eq. Cost		
Taxes		1.5%	2,154,492		2.154	2.15	4.13	2.15	4.13	of Total Installed Cost		
Operating					7	**7.37**	**14.12**	**7.48**	**14.34**			
Cost						**32.42**	**62.10**	**32.62**	**62.48**			
Annual Capital Charge						**41.15**	**78.84**	**41.15**	**78.84**			
Denatured						**73.57**	**140.94**	**73.77**	**141.32**			
			100% Conversion to Ethanol									
		Kg/hr	Kg/hr	MM								
Feed Cellulose	ZC101FLW	35,556	20,205	56.8								
Feed Xylan	ZX101FLW	15,879	9,228	26.0								
Feed Arabinan	ZA101FLW	658	382	1.1								
Feed Mannan	ZM101FLW	3,274	1,860	5.2								

Appendix E

Comparison of Experimentally Measured and Modeled Information

Comparison of Experimentally Measured and Modeled Information

Table E-1 shows pretreatment yields as measured in experimentally (Reference 17) and modeled in the base case. Overall yeilds were improved to account for near term research improvements. The primary improvement is in xylan to xylose yield. The other xylan products were reduced to allow for a higher xylose yield. Mannan, galactan, and arabinan to monomer yields were modified to match the xylan yields, but those three components are converted to little ethanol even in out year cases.

Table E-1. Pretreatment Hydrolyzer Reactions and Conversions – Measured and Modeled

Reaction	Conversion	Measured	Modeled
$(\text{Cellulose})_n + n\ H_2O \rightarrow n$ Glucose	Cellulose	0.065	0.065
$(\text{Cellulose})_n \rightarrow$ Glucose Olig	Cellulose	0.007	0.007
2 Cellulose $+ H_2O \rightarrow$ Cellobiose	Cellulose	0.007	0.007
Xylan $\rightarrow$ Xylose	Xylan	0.580	0.75
Xylan $\rightarrow$ Xylose Olig	Xylan	0.025	0.05
Xylan $\rightarrow$ Furfural $+ 2\ H_2O$	Xylan	0.182	0.1
Xylan $H_2O \rightarrow$ Tar	Xylan	0.190	0.05
Mannan $H_2O \rightarrow$ Mannose	Mannan	0.595	0.75
Mannan $\rightarrow$ Mannose Olig	Mannan	0.284	0.05
Mannan $\rightarrow$ HMF $+ 2\ H_2O$	Mannan	0.063	0.15
Galactan $+ H_2O \rightarrow$ Galactose	Galactan	0.944	0.75
Galactan $\rightarrow$ Galactose Olig	Galactan	0.056	0.05
Galactan $\rightarrow$ HMF $+ 2\ H_2O$	Galactan	0.000	0.15
Arabinan $+ H_2O \rightarrow$ Arabinose	Arabinan	0.817	0.75
Arabinan $\rightarrow$ Arabinose Olig	Arabinan	0.170	0.05
Arabinan $\rightarrow$ Furfural $+ 2\ H_2O$	Arabinan	0.000	0.1
Arabinan $+ H_2O \rightarrow$ Tar	Arabinan	0.000	0.05
Acetate $\rightarrow$ Acetic Acid	Acetate	1.0	1.0

Tables E-2 and E-3 show saccharification and fermentation yields, respectively, as measured experimentally (Reference 27) and modeled in the base case. Overall yields were improved to account for near term research improvements. An increased cellulose to glucose yield is considered achievable with a 15 FPU/g cellulose enzyme loading. The experiment was run using only 12 FPU/g cellulose. The glucose to ethanol yield is the most important fermentation yield and a 92% yield is considered achievable with an optimized organism. However, that optimized organism may not achieve xylose to ethanol yield of greater than 85%. The measured xylose to ethanol yield may be high due to experimental error. Arabinose, galactose, and mannose are not considered fermentable in the base case.

Table E-2 Production SSCF Saccharification Reactions and Conversions

Reaction	Conversion	Measured	Modeled
Cellulose $\rightarrow$ Glucose Olig	Cellulose	0.068	0.068
2 Cellulose $+ H_2O \rightarrow$ Cellobiose	Cellulose	0.012	0.012
Cellulose $+ H_2O \rightarrow$ Glucose	Cellulose	0.745	0.8
Cellobiose $+ H_2O \rightarrow 2$ Glucose	Cellobiose	1.0	1.0

Table E-3 SSCF Fermentation Reactions and Conversions

Reaction	Conversion	Measured	Modeled
Glucose $\rightarrow$ Ethanol + 2 CO_2	Glucose	0.853	0.92
Glucose + 1.2 NH_3 $\rightarrow$ 6 *Z. Mobilis* + 2.4 H_2O + 0.3 O_2	Glucose	0.027	0.027
Glucose + 2 H_2O $\rightarrow$ 2 Glycerol + O_2	Glucose	0.002	0.002
Glucose + 2 CO_2 $\rightarrow$ 2 Succinic Acid + O_2	Glucose	0.008	0.008
Glucose $\rightarrow$ 3 Acetic Acid	Glucose	0.022	0.022
Glucose $\rightarrow$ 2 Lactic Acid	Glucose	0.013	0.013
3 Xylose $\rightarrow$ 5 Ethanol + 5 CO_2	Xylose	0.916	0.85
Xylose + NH_3 $\rightarrow$ 5 *Z. Mobilis* + 2 H_2O + 0.25 O_2	Xylose	0.029	0.029
3 Xylose + 5 H_2O $\rightarrow$ 5 Glycerol + 2.5 O_2	Xylose	0.002	0.002
Xylose + H_2O $\rightarrow$ Xylitol + 0.5 O_2	Xylose	0.006	0.006
3 Xylose + 5 CO_2 $\rightarrow$ 5 Succinic Acid + 2.5 O_2	Xylose	0.009	0.009
2 Xylose $\rightarrow$ 5 Acetic Acid	Xylose	0.024	0.024
3 Xylose $\rightarrow$ 5 Lactic Acid	Xylose	0.014	0.014

The saccharification reactions are modeled to be series with the fermentation reactions, such that glucose generated by saccharification is available for the subsequent fermentation reactions.

Appendix F

Other Summary Model Results

Summary of Yields, Rates and Conversion Costs					
Case	NREL Near Term	Near Term Best of	Year 2005	Year 2010	Year 2015
Feedstock Rate (dry metric tons/day) to C	2000	2000	2000	2000	2000
Feedstock Rate (dry metric tons/day) to P	2000	2000	2000	2000	2275
Ethanol Production (MM gal/yr)	52.2	58.8	62.2	72.2	87.5
Ethanol Yield (Gal/dry ton (US) feedstock	68.0	76.0	81.0	94.0	112.0
Ethanol Yield Overall (Gal/dry ton (US) fe	68.0	76.0	81.0	94.0	99.0
Total Equipment Cost (1995 MM$)	135.0	119.1	98.4	90.7	92.4
Total Project Investment (1995 MM$)	233.8	205.3	169.4	156.1	159.3
Non-feedstock Raw Matl. (1995 MM$ / yr)	9.0	10.2	7.6	7.3	7.6
Waste Disposal (1995 MM$/yr)	0.6	0.6	1.5	1.5	1.6
Fixed Costs (1995 MM$/ yr)	7.5	6.9	6.2	5.9	5.9
Excess Electricity Generated (kWH/gal Et	1.76	2.66	2.80	1.22	0.0
On-Line Time (hr/yr)	8406	8406	8406	8406	8478
Case ID	R9906A	R9906B	R9906C	R9906D	R9906E

Appendix G

Process Flow Diagrams

Note: Larger format (11” x 17”) versions of these Process Flow Diagrams are available upon request from rwooley@nrel.gov.

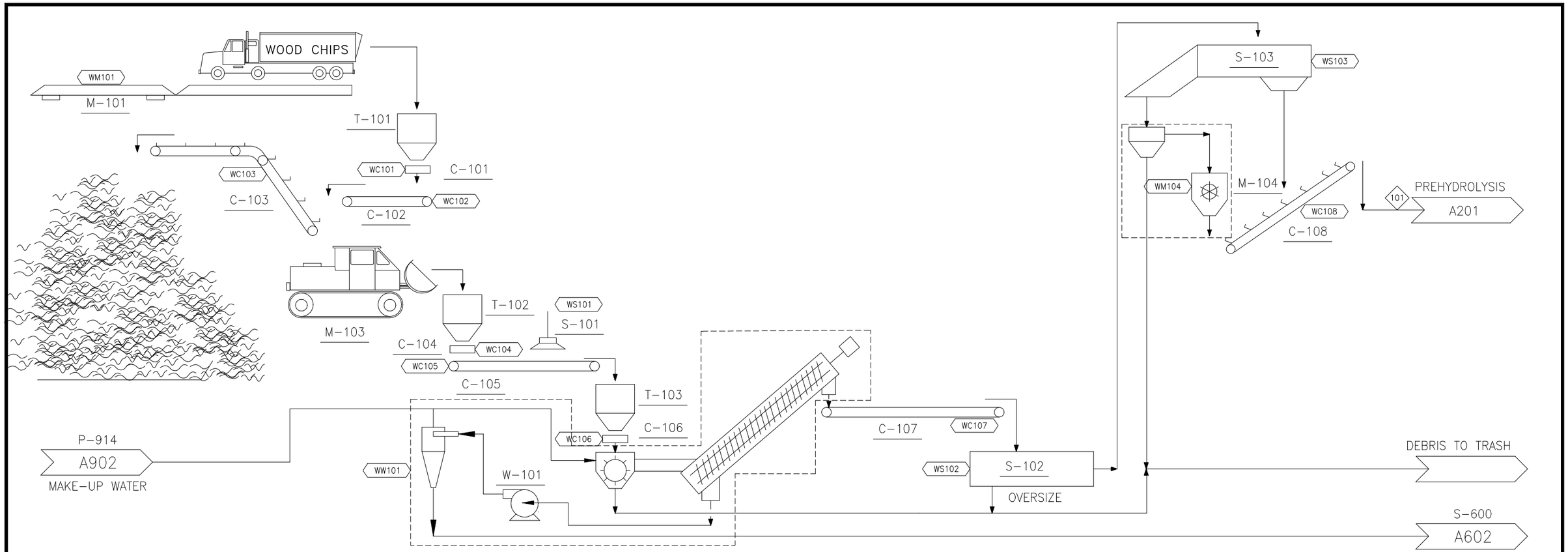

COMPONENT	UNITS	101
Total Flow	kg/hr	159,948
Insoluble Solids	%	52.1%
Soluble Solids	%	0.0%
Temperature	C	20
Pressure	atm	1.00
Vapor Fraction		0.00
Ethanol	kg/hr	
Water	kg/hr	76,615
Glucose (SS)	kg/hr	
Xylose (SS)	kg/hr	
Arabinose (SS)	kg/hr	
Other Sugars (SS)	kg/hr	
Cellobiose (SS)	kg/hr	
Glucose Oligomers (SS)	kg/hr	
Xylose Oligomers (SS)	kg/hr	
Other Oligomers (SS)	kg/hr	
Corn Steep Liquor (SS)	kg/hr	
(NH4)2SO4 (SS)	kg/hr	
NH4Acetate (SS)	kg/hr	
Others (Soluble Solids)	kg/hr	25
Acetic Acid	kg/hr	
Sulfuric Acid	kg/hr	
Furfural	kg/hr	
HMF	kg/hr	
Carbon Dioxide	kg/hr	
Methane	kg/hr	
Oxygen	kg/hr	
Nitrogen	kg/hr	
Ammonia	kg/hr	
NH4OH	kg/hr	
Others	kg/hr	
Cellulose (IS)	kg/hr	35,556
Xylan (IS)	kg/hr	15,879
Arabinan (IS)	kg/hr	658
Other Sugar Polymers (IS)	kg/hr	3,474
Cellulase (IS)	kg/hr	
Biomass (IS)	kg/hr	
Zymo (IS)	kg/hr	
Lignin (IS)	kg/hr	23,068
Gypsum (IS)	kg/hr	
Ca(OH)2 (IS)	kg/hr	
Others (Insoluble Solids)	kg/hr	4,674
Enthalpy Flow (millions)	Kcal/hr	-455.2
Average Density	g/ml	1.217

Heat Stream No.	MM kcal/hr

Work Stream No.	kW
WC101	2.98
WC102	11.19
WC103	22.37
WC104	2.98
WC105	37.29
WC106	0.75
WC107	11.18
WC108	27.96
WM101	6.22
WM104	391.50
WS101	0.00
WS102	29.83
WS103	29.83
WW101	149.10

Eq. No.	Equipment Name	Req.	Spare	Equipment Type	Mat Const.
C-101	Hopper Feeder	3	1	VIBRATING-FEEDER	CS
C-102	Transfer Belt Conveyor	1	0	BELT	CS
C-103	Radial Stacker Conveyor	1	0	BELT	CS
C-104	Reclaim Hopper Feeder	2	0	VIBRATING-FEEDER	CS
C-105	Reclaim Hopper Conveyor	1	0	BELT	CS
C-106	Chip Washer Feeder	4	0	VIBRATING-FEEDER	CS
C-107	Scalper Screen Feeder	2	0	BELT	CS
C-108	Pretreatment Feeder	1	0	BELT	CS
M-101	Hydraulic Truck Dump with Scale	3	1	TRUCK-SCALE	CS
M-103	Front End Loaders	2	0	LOADER	
M-104	Disk Refiner System	1	0	MISCELLANEOUS	SS316
S-101	Magnetic Separator	1	0	MAGNET	
S-102	Scalper Screener	2	0	SCREEN	CS
S-103	Chip Thickness Screen	1	0	SCREEN	CS
T-101	Dump Hopper	3	1	VERTICAL-VESSEL	CS
T-102	Reclaim Hopper	2	0	VERTICAL-VESSEL	CS
T-103	Washing/Refining Surge Bin	4	0	VERTICAL-VESSEL	CS
W-101	Chip Washer System	4	0	MISCELLANEOUS	SS304;SS316

VER	DESCRIPTION	DATE
A	SUBCONTRACTOR UPDATE	10/98
B	BASECASE UPDATE	11/98
C	DESIGN REPORT	2/99
D	FINAL 1999 DESIGN REPORT	6/99
		LL 6/23/99

NREL
NATIONAL RENEWABLE ENERGY LABORATORY
Biotechnology Center For Fuels And Chemicals

SECTION A100
WOOD CHIP FEED HANDLING

R9906A.xls | PFD-P100-A101 | D

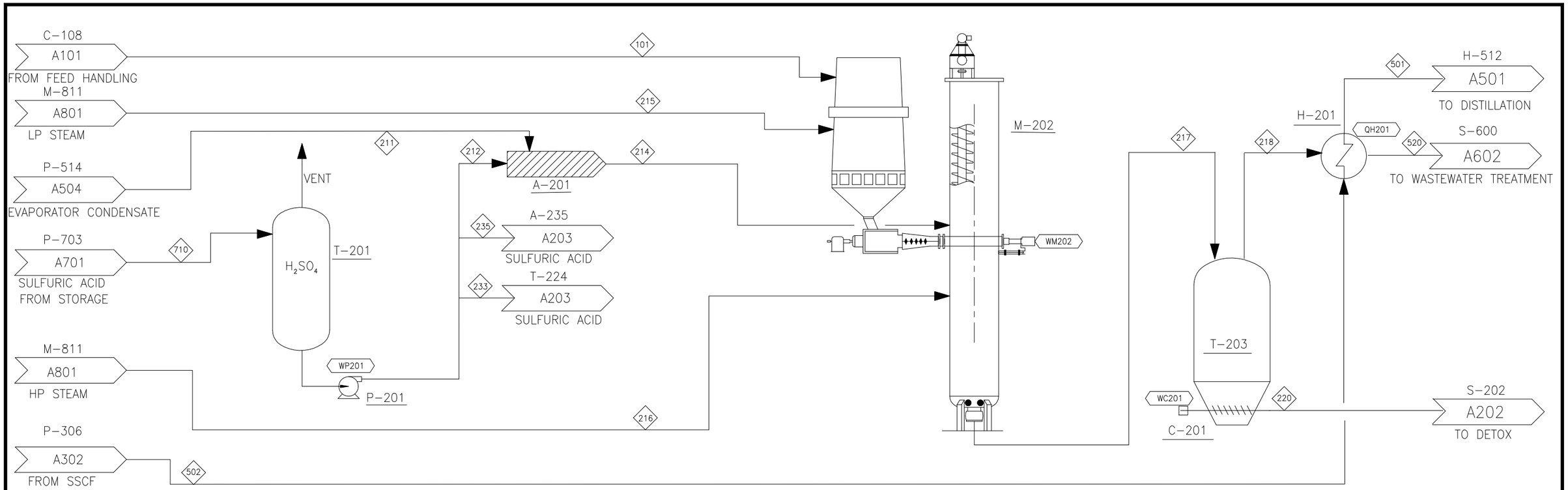

COMPONENT	UNITS	101	211	212	214	215	216	217	218	220	233	235	501	502	520	710
Total Flow	kg/hr	159,948	47,637	921	48,559	16,960	44,596	270,063	45,134	224,928	304	641	380,209	380,209	45,134	1,867
Insoluble Solids	%	52.1%	0.0%	0.0%	0.0%	0.0%	0.0%	21.8%	0.0%	26.1%	0.0%	0.0%	8.3%	8.3%	0.0%	0.0%
Soluble Solids	%	0.0%	0.3%	0.0%	0.3%	0.0%	0.0%	7.9%	0.1%	9.4%	0.0%	0.0%	2.9%	2.9%	0.1%	0.0%
Temperature	C	20	74	20	74	164	268	190	101	101	20	20	95	30	100	20
Pressure	atm	1.00	3.00	3.40	4.00	4.42	13.00	12.20	1.00	1.00	3.40	3.40	4.00	0.90	1.00	1.00
Vapor Fraction		0.00	0.00	0.00	0.00	1.00	1.00	0.00	1.00	0.00	0.00	0.00	0.00	0.00	0.07	0.00
Ethanol	kg/hr		38		38			38	29	9			18,701	18,701	29	
Water	kg/hr	76,615	47,092		47,092	16,960	44,596	183,384	43,822	139,562			308,205	308,205	43,822	
Glucose (SS)	kg/hr							2,568		2,568			219	219		
Xylose (SS)	kg/hr		0		0			13,533	0	13,533			721	721	0	
Arabinose (SS)	kg/hr		0		0			561	0	561			569	569	0	
Other Sugars (SS)	kg/hr							2,895		2,895			2,936	2,936		
Cellobiose (SS)	kg/hr							263		263			383	383		
Glucose Oligomers (SS)	kg/hr							423		423			3,021	3,021		
Xylose Oligomers (SS)	kg/hr		0		0			827	0	827			1,006	1,006	0	
Other Oligomers (SS)	kg/hr															
Corn Steep Liquor (SS)	kg/hr		130		130			130	31	99			2,327	2,327	31	
(NH4)2SO4 (SS)	kg/hr															
NH4Acetate (SS)	kg/hr															
Others (Soluble Solids)	kg/hr	25						25		25			29	29		
Acetic Acid	kg/hr		205		205			4,071	265	3,806			2,545	2,545	265	
Sulfuric Acid	kg/hr		0	921	921			921	0	921	304	641	295	295	0	1,867
Furfural	kg/hr		117		117			1,203	736	466			1,010	1,010	736	
HMF	kg/hr		39		39			405	248	157			340	340	248	
Carbon Dioxide	kg/hr												487	487		
Methane	kg/hr															
Oxygen	kg/hr												0	0		
Nitrogen	kg/hr												0	0		
Ammonia	kg/hr		0		0			0	0	0			12	12	0	
NH4OH	kg/hr															
Others	kg/hr		15		15			15	3	12			5,787	5,787	3	
Cellulose (IS)	kg/hr	35,556						32,747		32,747			3,631	3,631		
Xylan (IS)	kg/hr	15,879						794		794			794	794		
Arabinan (IS)	kg/hr	658						33		33			33	33		
Other Sugar Polymers (IS)	kg/hr	3,474						174		174			164	164		
Cellulase (IS)	kg/hr												624	624		
Biomass (IS)	kg/hr												245	245		
Zymo (IS)	kg/hr												1,061	1,061		
Lignin (IS)	kg/hr	23,068						23,068		23,068			23,068	23,068		
Gypsum (IS)	kg/hr												8	8		
Ca(OH)2 (IS)	kg/hr															
Others (Insoluble Solids)	kg/hr	4,674						1,986		1,986			1,986	1,986		
Enthalpy Flow (millions)	Kcal/hr	-455.2	-177.2	-1.8	-179.0	-53.3	-138.0	-825.4	-140.1	-685.3	-0.6	-1.2	-1295.5	-1317.5	-162.2	-3.6
Average Density	g/ml	1.217	0.945	3.102	0.951	0.002	0.005	1.000	0.001	1.124	3.102	3.102	0.971	0.960	0.009	3.102

Heat Stream No.	MM kcal/hr
QH201	-22.06

Work Stream No.	kW
WC201	36.96
WM202	863.08
WP201	0.39

Eq. No.	Equipment Name	Req.	Spare	Equipment Type	Mat Const.
A-201	In-line Sulfuric Acid Mixer	1	0	STATIC	SS304
C-201	Hydrolyzate Screw Conveyor	1	0	SCREW	SS316
H-201	Beer Column Feed Economizer	2	1	SHELL-TUBE	304SS
M-202	Prehydrolysis/Screw Feeder/Impregnator Reac	1	0	SCREW	HASTELLOY-C 200;S
P-201	Sulfuric Acid Pump	1	1	CENTRIFUGAL	SS304
T-201	Sulfuric Acid Storage	1	0	VERTICAL-VESSEL	PLASTIC
T-203	Blowdown Tank	1	0	VERTICAL-VESSEL	SS316

VER	DESCRIPTION	DATE
A	SUBCONTRACTOR UPDATE	4/98
B	BASECASE UPDATE	9/98
C	DESIGN REPORT	2/99
D	FINAL 1999 DESIGN REPORT	6/99
		LL 6/23/99

NREL NATIONAL RENEWABLE ENERGY LABORATORY
Biotechnology Center For Fuels And Chemicals

SECTION A200
PREHYDROLYSIS

R9906A.xls | PFD-P100-A201 | D

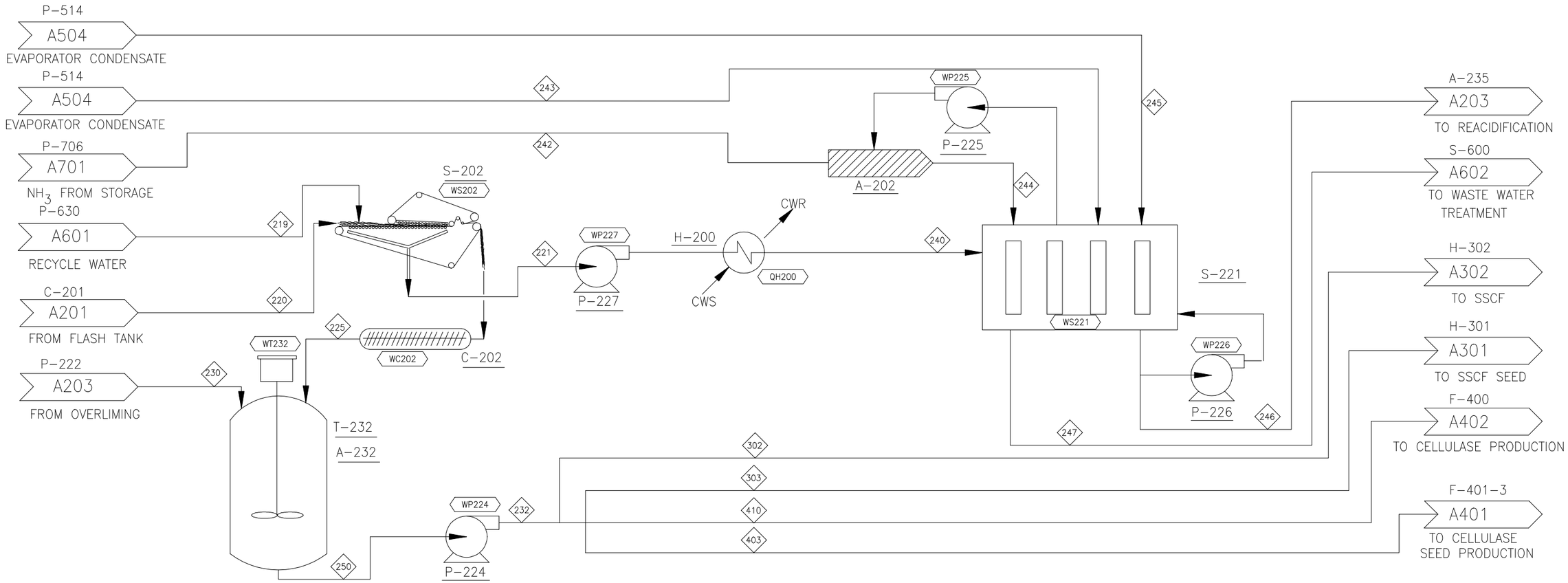

COMPONENT	UNITS	219	220	221	225	230	232	240	242	243	244	245	246	247	250	302	303	403	410
Total Flow	kg/hr	131,896	224,928	209,657	147,167	215,571	362,738	209,657	1,139	65,828	66,967	29,862	213,845	92,641	362,738	309,244	34,360	957	18,176
Insoluble Solids	%	0.2%	26.1%	0.1%	40.0%	0.0%	16.2%	0.1%	0.0%	0.0%	0.0%	0.0%	0.1%	0.0%	16.2%	16.2%	16.2%	16.2%	16.2%
Soluble Solids	%	1.1%	9.4%	7.6%	4.6%	7.4%	6.3%	7.6%	0.0%	0.0%	0.0%	0.3%	7.5%	4.9%	6.3%	6.3%	6.3%	6.3%	6.3%
Temperature	C	47	101	75	75	51	59	40	20	73	50	74	40	40	59	59	59	59	59
Pressure	atm	1.00	1.00	1.00	1.00	1.00	1.00	1.00	17.00	3.00	3.00	3.00	3.00	3.00	1.00	1.00	1.00	1.00	1.00
Vapor Fraction		0.00	0.00	0.00	0.00	0.00	0.00	0.00	0.00	0.00	0.00	0.00	0.00	0.00	0.00	0.00	0.00	0.00	0.00
Ethanol	kg/hr	18	9	19	8	43	52	19				24	43		52	44	5	0	3
Water	kg/hr	128,033	139,562	188,193	79,402	197,587	276,989	188,193		65,828	64,623	29,520	195,535	87,893	276,989	236,141	26,238	731	13,880
Glucose (SS)	kg/hr	0	2,568	1,806	762	1,802	2,564	1,806					1,806		2,564	2,186	243	7	128
Xylose (SS)	kg/hr	109	13,533	9,594	4,048	9,572	13,620	9,594				0	9,594		13,620	11,611	1,290	36	682
Arabinose (SS)	kg/hr	86	561	455	192	454	646	455				0	455		646	551	61	2	32
Other Sugars (SS)	kg/hr	444	2,895	2,348	991	2,343	3,333	2,348					2,348		3,333	2,842	316	9	167
Cellobiose (SS)	kg/hr	58	263	225	95	225	320	225					225		320	273	30	1	16
Glucose Oligomers (SS)	kg/hr	456	423	618	261	617	878	618					618		878	748	83	2	44
Xylose Oligomers (SS)	kg/hr	152	827	688	290	687	977	688				0	688		977	833	93	3	49
Other Oligomers (SS)	kg/hr																		
Corn Steep Liquor (SS)	kg/hr	191	99	204	86	285	371	204				82	285		371	316	35	1	19
(NH4)2SO4 (SS)	kg/hr													915					
NH4Acetate (SS)	kg/hr													3,606					
Others (Soluble Solids)	kg/hr	3	25	20	8	20	28	20					20		28	24	3	0	1
Acetic Acid	kg/hr	450	3,806	2,993	1,263	311	1,574	2,993				129	312		1,574	1,342	149	4	79
Sulfuric Acid	kg/hr	45	921	679	287		287	679				0			287	244	27	1	14
Furfural	kg/hr	467	466	657	277	728	1,005	657				73	730		1,005	857	95	3	50
HMF	kg/hr	157	157	221	93	245	339	221				25	246		339	289	32	1	17
Carbon Dioxide	kg/hr	0		0	0	0	0	0					0		0	0	0	0	0
Methane	kg/hr																		
Oxygen	kg/hr																		
Nitrogen	kg/hr																		
Ammonia	kg/hr	10	0	7	3		3	7	1,139			0		7	3	2	0	0	0
NH4OH	kg/hr										2,344			219					
Others	kg/hr	889	12	634	267	642	909	634				9	643		909	775	86	2	46
Cellulose (IS)	kg/hr	15	32,747	164	32,598	1	32,599	164					164		32,599	27,792	3,088	86	1,634
Xylan (IS)	kg/hr	3	794	4	793	0	793	4					4		793	676	75	2	40
Arabinan (IS)	kg/hr	0	33	0	33	0	33	0					0		33	28	3	0	2
Other Sugar Polymers (IS)	kg/hr	1	174	1	174	0	174	1					1		174	148	16	0	9
Cellulase (IS)	kg/hr	66		0	65	0	65	0					0		65	56	6	0	3
Biomass (IS)	kg/hr	26		0	26	0	26	0					0		26	22	2	0	1
Zymo (IS)	kg/hr	112		1	111	0	111	1					1		111	95	11	0	6
Lignin (IS)	kg/hr	97	23,068	116	23,049	1	23,050	116					116		23,050	19,651	2,183	61	1,155
Gypsum (IS)	kg/hr	0		0	0	8	8	0					0		8	7	1	0	0
Ca(OH)2 (IS)	kg/hr																		
Others (Insoluble Solids)	kg/hr	8	1,986	10	1,985	0	1,985	10					10		1,985	1,692	188	5	99
Enthalpy Flow (millions)	Kcal/hr	-488.6	-685.3	-739.4	-434.5	-772.9	-1207.5	-746.0	-1.1	-246.3	-244.3	-111.1	-768.0	-347.3	-1207.5	-1029.4	-114.4	-3.2	-60.5
Average Density	g/ml	0.979	1.124	0.976	1.196	0.998	1.078	1.011	0.610	0.945	0.978	0.945	1.010	0.914	1.078	1.078	1.078	1.078	1.078

Heat Stream No.	MM kcal/hr
QH200	6.60

Work Stream No.	kW
WC202	44.59
WP224	59.04
WP225	15.21
WP226	23.12
WP227	46.94
WS202	44.60
WS221	2.24
WT232	25.55

Eq. No.	Equipment Name	Req.	Spare	Equipment Type	Mat Const.
A-202	In-line NH3 Mixer	1	0	STATIC	SS304
A-232	Reslurrying Tank Agitator	1	0	FIXED-PROP	SS
C-202	Wash Solids Screw Conveyor	4	0	SCREW	SS304
H-200	Hydrolyzate Cooler	1	0	SHELL-TUBE	304SS;CS
P-224	Fermentation Feed Pump	2	1	ROTARY-LOBE	304SS
P-225	ISEP Elution Pump	1	1	CENTRIFUGAL	SS304
P-226	ISEP Reload Pump	1	1	CENTRIFUGAL	SS304
P-227	ISEP Hydrolyzate Feed Pump	1	1	CENTRIFUGAL	SS304
S-202	Pre-IX Belt Filter Press	8	0	BELT-FILTER-PRESS	SS316
S-221	ISEP	1	0	CONT-IX	SS316;POLYPROP;R
T-232	Slurrying Tank	1	0	FLAT-BTM-STORAGE	SS304

VER	DESCRIPTION	DATE
A	SUBCONTRACTOR UPDATE	5/97
B	BASECASE UPDATE	9/98
C	DESIGN REPORT	2/99
D	FINAL 1999 DESIGN REPORT	6/99
		LL 6/23/99

NREL
NATIONAL RENEWABLE ENERGY LABORATORY
Biotechnology Center For Fuels And Chemicals

SECTION A200
DETOXIFICATION

R9906A.xls | PFD-P100-A202 | D

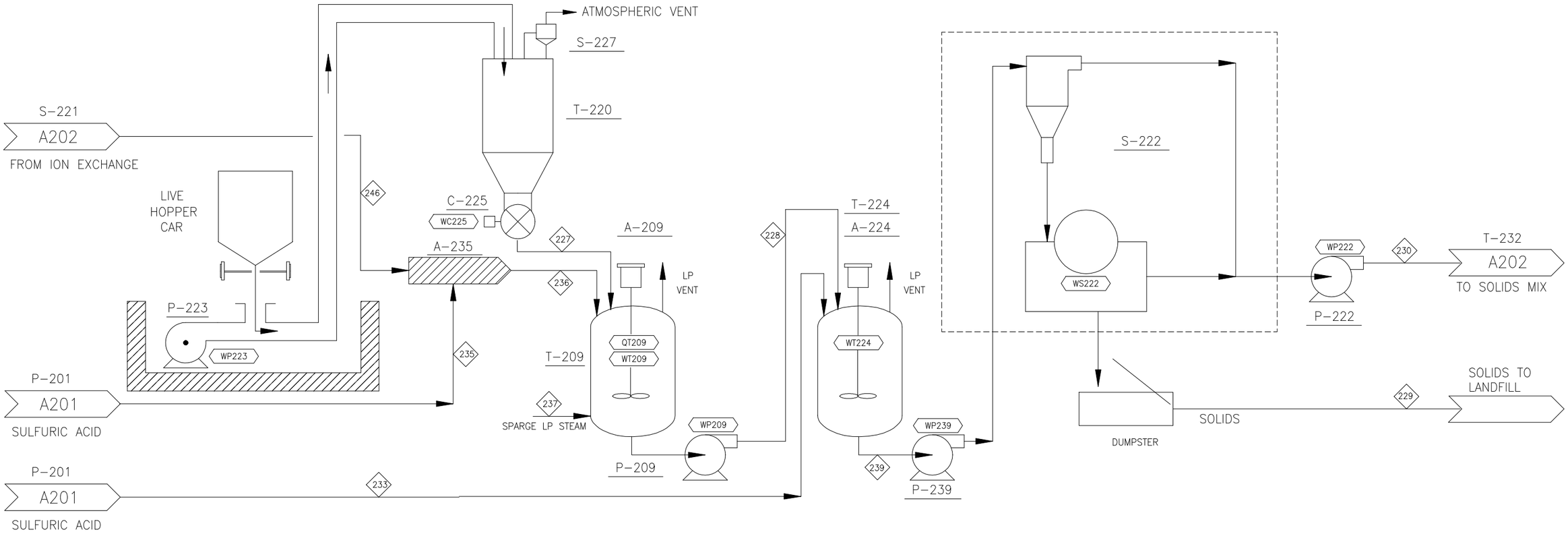

COMPONENT	UNITS	227	228	229	230	233	235	236	237	239	246
Total Flow	kg/hr	714	217,699	2,433	215,571	304	641	214,486	2,499	218,003	213,845
Insoluble Solids	%	100.0%	0.8%	79.9%	0.0%	0.0%	0.0%	0.1%	0.0%	0.9%	0.1%
Soluble Solids	%	0.0%	7.4%	1.5%	7.4%	0.0%	0.0%	7.5%	0.0%	7.4%	7.5%
Temperature	C		50	51	51	20	20	40	164	51	40
Pressure	atm	1.00	1.00	1.00	1.00	3.40	3.40	3.00	4.42	1.00	3.00
Vapor Fraction		0.00	0.00	0.00	0.00	0.00	0.00	0.00	1.00	0.00	0.00
Ethanol	kg/hr		43	0	43			43		43	43
Water	kg/hr		198,034	447	197,587			195,535	2,499	198,034	195,535
Glucose (SS)	kg/hr		1,806	4	1,802			1,806		1,806	1,806
Xylose (SS)	kg/hr		9,594	22	9,572			9,594		9,594	9,594
Arabinose (SS)	kg/hr		455	1	454			455		455	455
Other Sugars (SS)	kg/hr		2,348	5	2,343			2,348		2,348	2,348
Cellobiose (SS)	kg/hr		225	1	225			225		225	225
Glucose Oligomers (SS)	kg/hr		618	1	617			618		618	618
Xylose Oligomers (SS)	kg/hr		688	2	687			688		688	688
Other Oligomers (SS)	kg/hr										
Corn Steep Liquor (SS)	kg/hr		285	1	285			285		285	285
(NH4)2SO4 (SS)	kg/hr										
NH4Acetate (SS)	kg/hr										
Others (Soluble Solids)	kg/hr		20	0	20			20		20	20
Acetic Acid	kg/hr		312	1	311			312		312	312
Sulfuric Acid	kg/hr					304	641	641			
Furfural	kg/hr		730	2	728			730		730	730
HMF	kg/hr		246	1	245			246		246	246
Carbon Dioxide	kg/hr		0	0	0			0		0	0
Methane	kg/hr										
Oxygen	kg/hr										
Nitrogen	kg/hr										
Ammonia	kg/hr										
NH4OH	kg/hr										
Others	kg/hr		643	1	642			643		643	643
Cellulose (IS)	kg/hr		164	163	1			164		164	164
Xylan (IS)	kg/hr		4	4	0			4		4	4
Arabinan (IS)	kg/hr		0	0	0			0		0	0
Other Sugar Polymers (IS)	kg/hr		1	1	0			1		1	1
Cellulase (IS)	kg/hr		0	0	0			0		0	0
Biomass (IS)	kg/hr		0	0	0			0		0	0
Zymo (IS)	kg/hr		1	1	0			1		1	1
Lignin (IS)	kg/hr		116	115	1			116		116	116
Gypsum (IS)	kg/hr		1,125	1,651	8			0		1,659	0
Ca(OH)2 (IS)	kg/hr	714	230								
Others (Insoluble Solids)	kg/hr		10	10	0			10		10	10
Enthalpy Flow (millions)	Kcal/hr	-2.3	-779.4	-7.0	-772.9	-0.6	-1.2	-769.2	-7.9	-779.9	-768.0
Average Density	g/ml	2.343	1.008	1.912	0.998	3.102	3.102	1.011	0.002	1.009	1.010

Heat Stream No.	MM kcal/hr
QT209	38.38

Work Stream No.	kW
WC225	0.25
WP209	47.39
WP222	47.16
WP223	8.57
WP239	31.69
WS222	24.29
WT209	21.37
WT224	85.62

Eq. No.	Equipment Name	Req.	Spare	Equipment Type	Mat Const.
A-209	Overliming Tank Agitator	1	0	FIXED-PROP	SS
A-224	Reacidification Tank Agitator	1	0	FIXED-PROP	SS
A-235	In-line Acidification Mixer	1	0	STATIC	304SS
C-225	Lime Solids Feeder	1	0	ROTARY-VALVE	A285C
P-209	Overlimed Hydrolyzate Pump	1	1	CENTRIFUGAL	304SS
P-222	Filtered Hydrolyzate Pump	1	1	CENTRIFUGAL	304SS
P-223	Lime Unloading Blower	1	0	CENTRIFUGAL	C.S.
P-239	Reacidified Liquor Pump	1	1	CENTRIFUGAL	SS304
S-222	Hydroclone & Rotary Drum Filter	1	0	ROTARY-DRUM	EPOXY LINED
S-227	LimeDust Vent Baghouse	1	0	FABRIC-FILTER	A285C;POLYESTER
T-209	Overliming Tank	1	0	VERTICAL-VESSEL	SS304
T-220	Lime Storage Bin	1	0	LIVE-BTM-BIN	CS
T-224	Reacidification Tank	1	0	FLAT-BTM-STORAGE	SS304

VER	DESCRIPTION	DATE
A	SUBCONTRACTOR UPDATE	4/98
B	BASECASE UPDATE	9/98
C	DESIGN REPORT	2/99
D	FINAL 1999 DESIGN REPORT	6/99
		LL 6/23/99

NREL NATIONAL RENEWABLE ENERGY LABORATORY
Biotechnology Center For Fuels And Chemicals

SECTION A200
LIME ADDITION

R9906A.xls | PFD-P100-A203 | D

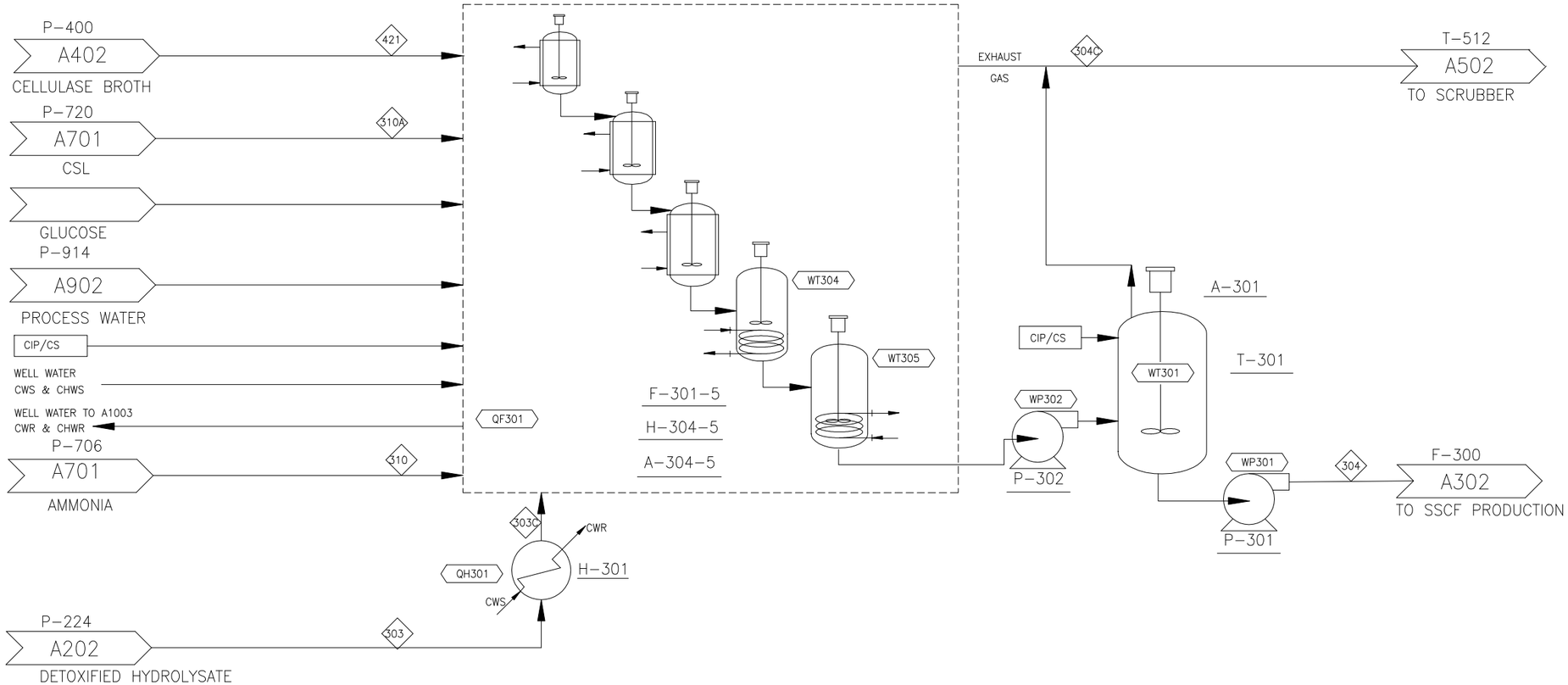

COMPONENT	UNITS	303	303C	304	304C	310	310A	421
Total Flow	kg/hr	34,360	34,360	37,997	876	8	583	3,922
Insoluble Solids	%	16.2%	16.2%	13.8%	0.0%	0.0%	0.0%	5.6%
Soluble Solids	%	6.3%	6.3%	3.8%	0.0%	0.0%	100.0%	1.7%
Temperature	C	59	30	30	30	35	35	28
Pressure	atm	1.00	1.00	1.00	1.00	1.00	1.00	1.66
Vapor Fraction		0.00	0.00	0.00	1.00	1.00	0.00	0.00
Ethanol	kg/hr	5	5	929	7			0
Water	kg/hr	26,238	26,238	29,713	15			3,549
Glucose (SS)	kg/hr	243	243	60				
Xylose (SS)	kg/hr	1,290	1,290	129				
Arabinose (SS)	kg/hr	61	61	61				
Other Sugars (SS)	kg/hr	316	316	316				
Cellobiose (SS)	kg/hr	30	30	33				3
Glucose Oligomers (SS)	kg/hr	83	83	96				13
Xylose Oligomers (SS)	kg/hr	93	93	101				8
Other Oligomers (SS)	kg/hr							
Corn Steep Liquor (SS)	kg/hr	35	35	661	0		583	43
(NH4)2SO4 (SS)	kg/hr							
NH4Acetate (SS)	kg/hr							
Others (Soluble Solids)	kg/hr	3	3	3				0
Acetic Acid	kg/hr	149	149	198	0			15
Sulfuric Acid	kg/hr	27	27	30	0			2
Furfural	kg/hr	95	95	101	0			6
HMF	kg/hr	32	32	34	0			2
Carbon Dioxide	kg/hr	0	0	43	838			0
Methane	kg/hr							
Oxygen	kg/hr			0	15			0
Nitrogen	kg/hr			0	0			0
Ammonia	kg/hr	0	0			8		
NH4OH	kg/hr							
Others	kg/hr	86	86	252	0			60
Cellulose (IS)	kg/hr	3,088	3,088	2,470				
Xylan (IS)	kg/hr	75	75	79				4
Arabinan (IS)	kg/hr	3	3	3				0
Other Sugar Polymers (IS)	kg/hr	16	16	16				
Cellulase (IS)	kg/hr	6	6	62				56
Biomass (IS)	kg/hr	2	2	25				22
Zymo (IS)	kg/hr	11	11	75				3
Lignin (IS)	kg/hr	2,183	2,183	2,307				123
Gypsum (IS)	kg/hr	1	1	1				0
Ca(OH)2 (IS)	kg/hr							
Others (Insoluble Solids)	kg/hr	188	188	199				11
Enthalpy Flow (milliions)	Kcal/hr	-114.4	-115.2	-129.9	-1.8	0.0	-2.2	-14.3
Average Density	g/ml	1.078	1.102	1.066	0.002	0.001	0.984	1.021

Heat Stream No.	MM kcal/hr
QF301	0.12
QH301	0.79

Work Stream No.	kW
WP301	14.96
WP302	14.96
WT301	20.41
WT304	10.21
WT305	34.02

Eq. No.	Equipment Name	Req.	Spare	Equipment Type	Mat Const.
A-301	Seed Hold Tank Agitator	1	0	FIXED-PROP	SS304
A-304	4th Seed Vessel Agitator	2	0	FIXED-PROP	SS
A-305	5th Seed Vessel Agitator	2	0	FIXED-PROP	SS
F-301	1st SSCF Seed Fermentor	2	0	VERTICAL-VESSEL	SS304
F-302	2nd SSCF Seed Fermentor	2	0	VERTICAL-VESSEL	SS304
F-303	3rd SSCF Seed Fermentor	2	0	VERTICAL-VESSEL	SS304
F-304	4th SSCF Seed Fermentor	2	0	FLAT-BTM-STORAGE	SS304
F-305	5th SSCF Seed Fermentor	2	0	FLAT-BTM-STORAGE	SS304
H-301	SSCF Seed Hydrolyzate Cooler	1	0	PLATE-FRAME	SS304
H-304	4TH Seed Fermentor Coils	1	0	IMMERSED-COIL	SS
H-305	5TH Seed Fermentor Coils	1	0	IMMERSED-COIL	SS
P-301	SSCF Seed Transfer Pump	1	1	ROTARY-LOBE	SS304
P-302	Seed Transfer Pump	2	0	ROTARY-LOBE	SS304
T-301	SSCF Seed Hold Tank	1	0	FLAT-BTM-STORAGE	SS304

VER	DESCRIPTION	DATE
A	SUBCONTRACTOR UPDATE	4/98
B	BASECASE UPDATE	9/98
C	DESIGN REPORT	2/99
D	FINAL 1999 DESIGN REPORT	6/99
		LL 6/23/99

NREL NATIONAL RENEWABLE ENERGY LABORATORY
Biotechnology Center For Fuels And Chemicals

SECTION A300
SSCF SEED & PRODUCTION FERM.

R9906A.xls | PFD-P100-A301 | D

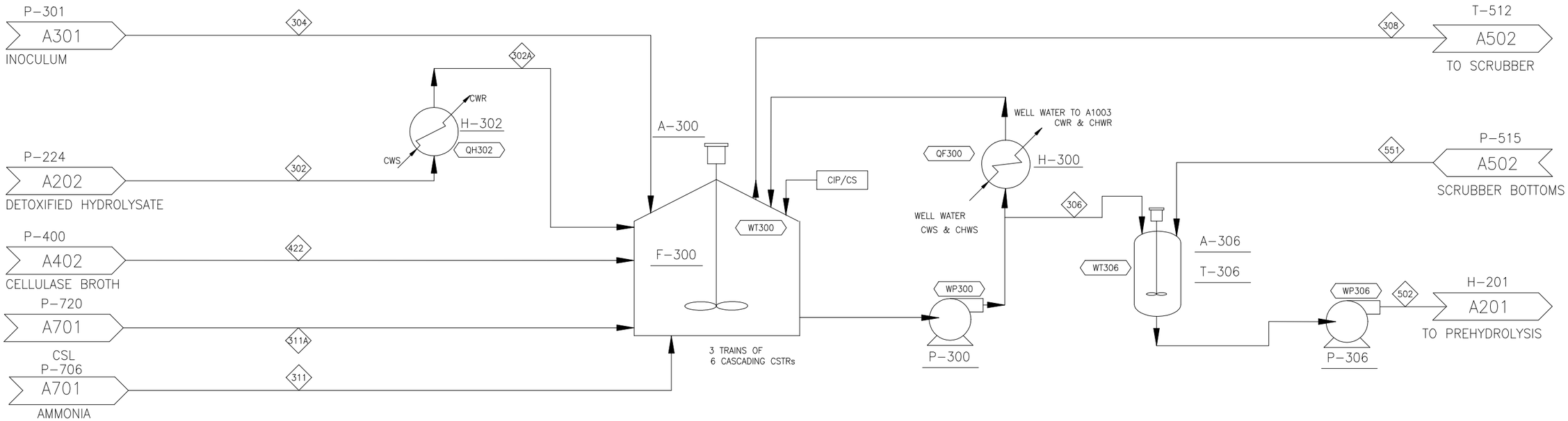

COMPONENT	UNITS	302	302A	304	306	308	311	311A	422	502	551
Total Flow	kg/hr	309,244	309,244	37,997	366,647	16,978	129	959	35,296	380,209	13,562
Insoluble Solids	%	16.2%	16.2%	13.8%	8.6%	0.0%	0.0%	0.0%	5.6%	8.3%	0.0%
Soluble Solids	%	6.3%	6.3%	3.8%	3.1%	0.0%	0.0%	100.0%	1.7%	2.9%	0.0%
Temperature	C	59	34	30	30	30	35	35	28	30	30
Pressure	atm	1.00	1.00	1.00	1.00	1.00	1.00	1.00	1.66	0.90	0.90
Vapor Fraction		0.00	0.00	0.00	0.00	1.00	1.00	0.00	0.00	0.00	0.00
Ethanol	kg/hr	44	44	929	18,365	263			2	18,701	337
Water	kg/hr	236,141	236,141	29,713	295,010	288			31,940	308,205	13,195
Glucose (SS)	kg/hr	2,186	2,186	60	219					219	
Xylose (SS)	kg/hr	11,611	11,611	129	721					721	
Arabinose (SS)	kg/hr	551	551	61	569					569	
Other Sugars (SS)	kg/hr	2,842	2,842	316	2,936					2,936	
Cellobiose (SS)	kg/hr	273	273	33	383				25	383	
Glucose Oligomers (SS)	kg/hr	748	748	96	3,021				119	3,021	
Xylose Oligomers (SS)	kg/hr	833	833	101	1,006				72	1,006	
Other Oligomers (SS)	kg/hr										
Corn Steep Liquor (SS)	kg/hr	316	316	661	2,324	2		959	390	2,327	3
(NH4)2SO4 (SS)	kg/hr										
NH4Acetate (SS)	kg/hr										
Others (Soluble Solids)	kg/hr	24	24	3	29				2	29	
Acetic Acid	kg/hr	1,342	1,342	198	2,543	1			139	2,545	2
Sulfuric Acid	kg/hr	244	244	30	295	0			21	295	0
Furfural	kg/hr	857	857	101	1,003	6			52	1,010	7
HMF	kg/hr	289	289	34	338	2			17	340	2
Carbon Dioxide	kg/hr	0	0	43	471	16,281			0	487	16
Methane	kg/hr										
Oxygen	kg/hr			0	0	134			0	0	0
Nitrogen	kg/hr			0	0	1			1	0	0
Ammonia	kg/hr	2	2		11	0	129			12	0
NH4OH	kg/hr										
Others	kg/hr	775	775	252	5,786	0			538	5,787	0
Cellulose (IS)	kg/hr	27,792	27,792	2,470	3,631					3,631	
Xylan (IS)	kg/hr	676	676	79	794				38	794	
Arabinan (IS)	kg/hr	28	28	3	33				2	33	
Other Sugar Polymers (IS)	kg/hr	148	148	16	164					164	
Cellulase (IS)	kg/hr	56	56	62	624				506	624	
Biomass (IS)	kg/hr	22	22	25	245				199	245	
Zymo (IS)	kg/hr	95	95	75	1,061				24	1,061	
Lignin (IS)	kg/hr	19,651	19,651	2,307	23,068				1,111	23,068	
Gypsum (IS)	kg/hr	7	7	1	8				0	8	
Ca(OH)2 (IS)	kg/hr										
Others (Insoluble Solids)	kg/hr	1,692	1,692	199	1,986				96	1,986	
Enthalpy Flow (millions)	Kcal/hr	-1029.4	-1035.6	-129.9	-1267.1	-36.0	-0.1	-3.6	-128.4	-1317.5	-50.4
Average Density	g/ml	1.078	1.099	1.066	1.035	0.002	0.001	0.984	1.021	0.960	0.983

Heat Stream No.	M M kcal/hr
QF300	5.51
QH302	6.19

Work Stream No.	kW
WP300	896.62
WP306	100.18
WT300	1789.02
WT306	2.65

Eq. No.	Equipment Name	Req.	Spare	Equipment Type	Mat Const.
A-300	SSCF Fermentor Agitators	34	0	FIXED-PROP	SS304
A-306	Beer Surge Tank Agitator	1	0	FIXED-PROP	SS304
F-300	SSCF Fermentors	17	0	FLAT-BTM-STORAGE	SS304
H-300	Fermentation Cooler	17	1	PLATE-FRAME	SS304
H-302	SSCF Hydrolyzate Cooler	3	0	PLATE-FRAME	SS304
P-300	SSCF Recirculation and Transfer Pump	17	1	CENTRIFUGAL	SS304
P-306	Beer Transfer Pump	1	1	CENTRIFUGAL	SS304
T-306	Beer Storage Tank	1	0	FLAT-BTM-STORAGE	SS304

VER	DESCRIPTION	DATE
A	SUBCONTRACTOR UPDATE	4/98
B	BASECASE UPDATE	9/98
C	DESIGN REPORT	2/99
D	FINAL 1999 DESIGN REPORT	6/99

LL 6/23/99

NATIONAL RENEWABLE ENERGY LABORATORY

Biotechnology Center For Fuels And Chemicals

SECTION A300
SSCF SEED & PRODUCTION FERM.

R9906A.xls | PFD-P100-A302 | D

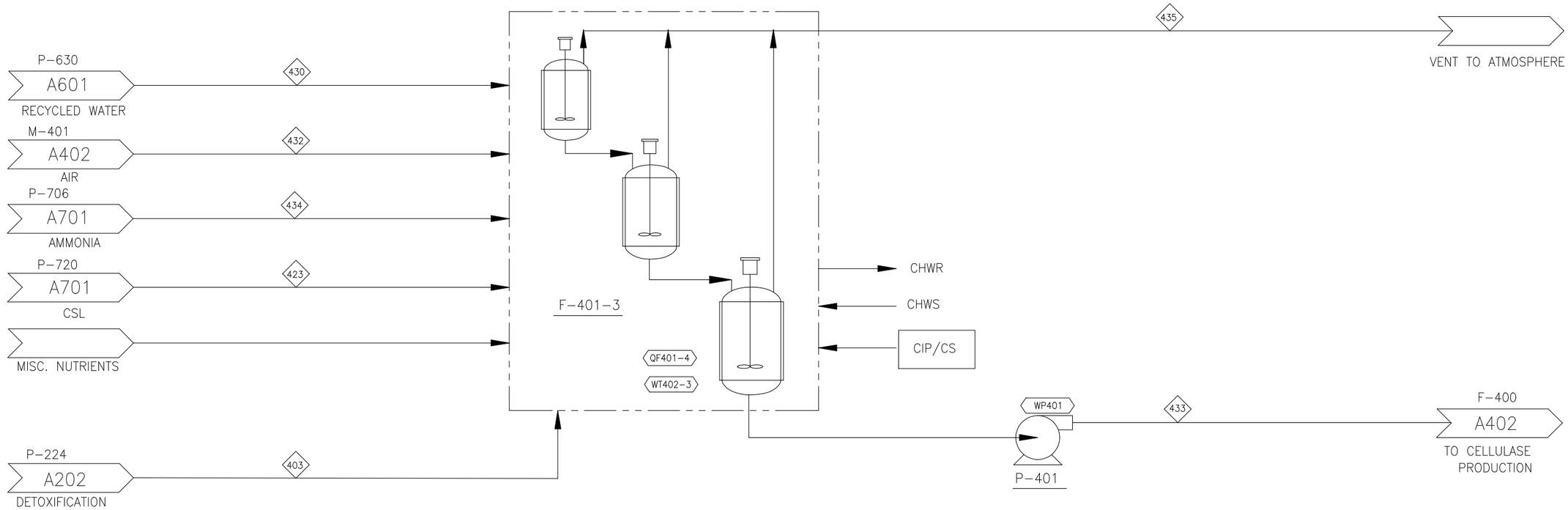

COMPONENT	UNITS	403	423	430	432	433	434	435
Total Flow	kg/hr	957	30	2,147	20,928	2,580	8	21,488
Insoluble Solids	%	16.2%	0.0%	0.2%	0.0%	4.7%	0.0%	0.0%
Soluble Solids	%	6.3%	100.0%	1.1%	0.0%	1.7%	0.0%	0.0%
Temperature	C	59	28	47	40	28	28	28
Pressure	atm	1.00	1.00	1.00	1.00	1.00	1.00	1.00
Vapor Fraction		0.00	0.00	0.00	1.00	0.00	1.00	1.00
Ethanol	kg/hr	0		0		0		0
Water	kg/hr	731		2,084		2,382		501
Glucose (SS)	kg/hr	7		0				
Xylose (SS)	kg/hr	36		2				
Arabinose (SS)	kg/hr	2		1				
Other Sugars (SS)	kg/hr	9		7				
Cellobiose (SS)	kg/hr	1		1		2		
Glucose Oligomers (SS)	kg/hr	2		7		10		
Xylose Oligomers (SS)	kg/hr	3		2		5		
Other Oligomers (SS)	kg/hr							
Corn Steep Liquor (SS)	kg/hr	1	30	3		28		6
(NH4)2SO4 (SS)	kg/hr							
NH4Acetate (SS)	kg/hr							
Others (Soluble Solids)	kg/hr	0		0		0		
Acetic Acid	kg/hr	4		7		10		1
Sulfuric Acid	kg/hr	1		1		1		0
Furfural	kg/hr	3		8		3		7
HMF	kg/hr	1		3		1		2
Carbon Dioxide	kg/hr	0		0		0		145
Methane	kg/hr							
Oxygen	kg/hr				4,395	0		4,292
Nitrogen	kg/hr				16,533	0		16,533
Ammonia	kg/hr	0		0			8	
NH4OH	kg/hr							
Others	kg/hr	2		14		17	0	0
Cellulose (IS)	kg/hr	86		0				
Xylan (IS)	kg/hr	2		0		2		
Arabinan (IS)	kg/hr	0		0		0		
Other Sugar Polymers (IS)	kg/hr	0		0				
Cellulase (IS)	kg/hr	0		1		1		
Biomass (IS)	kg/hr	0		0		48		
Zymo (IS)	kg/hr	0		2		2		
Lignin (IS)	kg/hr	61		2		62		
Gypsum (IS)	kg/hr	0		0		0		
Ca(OH)2 (IS)	kg/hr							
Others (Insoluble Solids)	kg/hr	5		0		5		
Enthalpy Flow (millions)	Kcal/hr	-3.2	-0.1	-8.0	0.1	-9.5	0.0	-1.9
Average Density	g/ml	1.078	0.991	0.979	0.001	1.018	0.001	0.001

Heat Stream No.	MM kcal/hr
QF401-4	0.21

Work Stream No.	kW
WP401	0.75
WT402-3	364.67

Eq. No.	Equipment Name	Req.	Spare	Equipment Type	Mat Const.
F-401	1st Cellulase Seed Fermentor	3	0	VERTICAL-VESSEL	SS304
F-402	2nd Cellulase Seed Fermentor	3	0	VERTICAL-VESSEL	SS304
F-403	3rd Cellulase Seed Fermentor	3	0	VERTICAL-VESSEL	SS304
P-401	Cellulase Seed Pump	1	1	ROTARY-LOBE	SS316

VER	DESCRIPTION	DATE
A	SUBCONTRACTOR UPDATE	4/98
B	BASECASE UPDATE	9/98
C	DESIGN REPORT	2/99
D	FINAL 1999 DESIGN REPORT	6/99
		LL 6/23/99

NREL
NATIONAL RENEWABLE ENERGY LABORATORY
Biotechnology Center For Fuels And Chemicals

SECTION A400
CELLULASE SEED FERMENTATION

R9906A.xls | PFD-P100-A401 | D

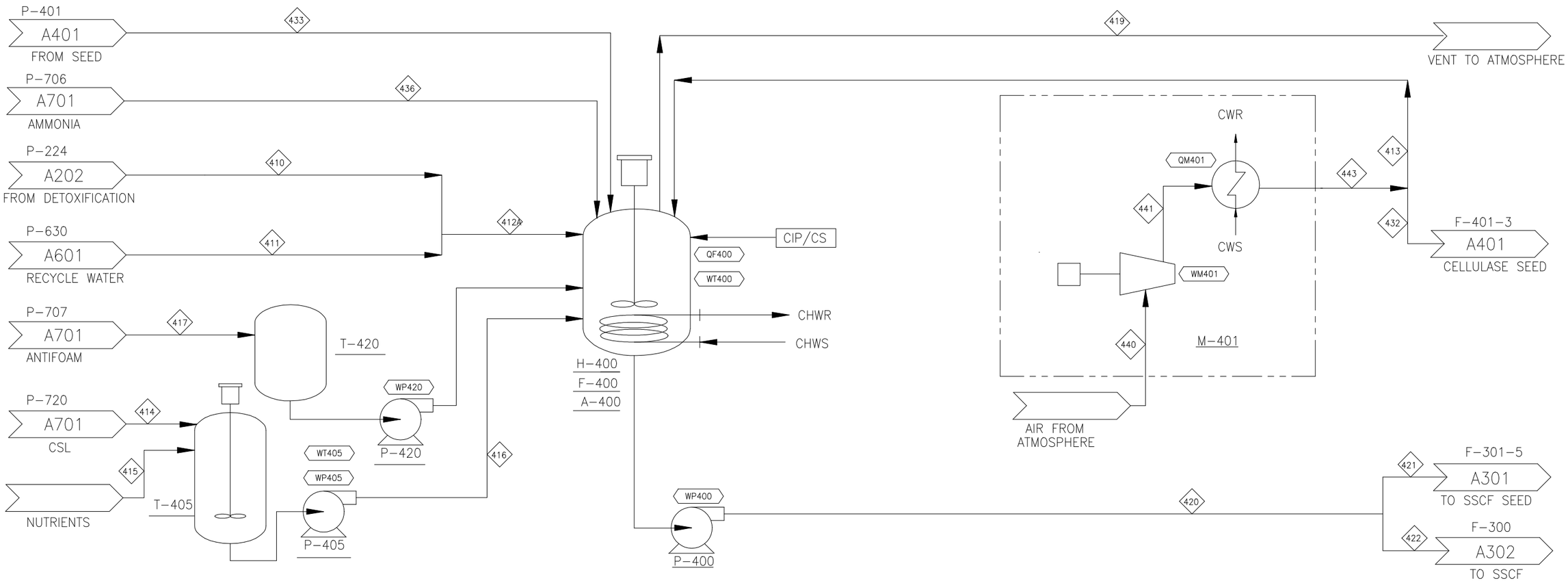

COMPONENT	UNITS	410	411	412A	413	414	415	416	417	419	420	421	422	432	433	436	440	441	443
Total Flow	kg/hr	18,176	22,784	40,960	301,966	406	174	580	227	307,253	39,217	3,922	35,296	20,928	2,580	157	322,894	322,894	322,894
Insoluble Solids	%	16.2%	0.2%	7.3%	0.0%	0.0%	0.0%	0.0%	0.0%	0.0%	5.6%	5.6%	5.6%	0.0%	4.7%	0.0%	0.0%	0.0%	0.0%
Soluble Solids	%	6.3%	1.1%	3.4%	0.0%	100.0%	0.0%	69.9%	0.0%	0.0%	1.7%	1.7%	1.7%	0.0%	1.7%	0.0%	0.0%	0.0%	0.0%
Temperature	C	59	47	48	40	28	28	28	28	28	28	28	28	40	28	28	20	169	40
Pressure	atm	1.00	1.00	1.00	1.00	1.00	1.00	1.00	1.00	1.66	1.66	1.66	1.66	1.00	1.00	1.00	1.00	3.00	1.00
Vapor Fraction		0.00	0.00	0.00	1.00	0.00	0.00	0.00	0.00	1.00	0.00	0.00	0.00	1.00	0.00	1.00	1.00	1.00	1.00
Ethanol	kg/hr	3	3	6						4	2	0	2		0				
Water	kg/hr	13,880	22,117	35,996						4,263	35,489	3,549	31,940		2,382				
Glucose (SS)	kg/hr	128	0	128															
Xylose (SS)	kg/hr	682	19	701															
Arabinose (SS)	kg/hr	32	15	47															
Other Sugars (SS)	kg/hr	167	77	244															
Cellobiose (SS)	kg/hr	16	10	26							28	3	25		2				
Glucose Oligomers (SS)	kg/hr	44	79	123							133	13	119		10				
Xylose Oligomers (SS)	kg/hr	49	26	75							80	8	72		5				
Other Oligomers (SS)	kg/hr																		
Corn Steep Liquor (SS)	kg/hr	19	33	52		406		406		52	433	43	390		28				
(NH4)2SO4 (SS)	kg/hr																		
NH4Acetate (SS)	kg/hr																		
Others (Soluble Solids)	kg/hr	1	1	2							2	0	2		0				
Acetic Acid	kg/hr	79	78	157						12	155	15	139		10				
Sulfuric Acid	kg/hr	14	8	22						0	24	2	21		1				
Furfural	kg/hr	50	81	131						77	58	6	52		3				
HMF	kg/hr	17	27	44						26	19	2	17		1				
Carbon Dioxide	kg/hr	0	0	0						2,950	1	0	0		0				
Methane	kg/hr																		
Oxygen	kg/hr				63,413					61,298	0	0	0	4,395	0		67,808	67,808	67,808
Nitrogen	kg/hr				238,553					238,552	1	0	1	16,533	0		255,086	255,086	255,086
Ammonia	kg/hr	0	2	2												145			
NH4OH	kg/hr																		
Others	kg/hr	46	154	199			174	174	227	19	598	60	538		17	12			
Cellulose (IS)	kg/hr	1,634	3	1,636															
Xylan (IS)	kg/hr	40	1	40							42	4	38		2				
Arabinan (IS)	kg/hr	2	0	2							2	0	2		0				
Other Sugar Polymers (IS)	kg/hr	9	0	9															
Cellulase (IS)	kg/hr	3	11	15							563	56	506		1				
Biomass (IS)	kg/hr	1	4	6							221	22	199		48				
Zymo (IS)	kg/hr	6	19	25							27	3	24		2				
Lignin (IS)	kg/hr	1,155	17	1,172							1,234	123	1,111		62				
Gypsum (IS)	kg/hr	0	0	0							0	0	0		0				
Ca(OH)2 (IS)	kg/hr																		
Others (Insoluble Solids)	kg/hr	99	1	101							106	11	96		5				
Enthalpy Flow (millions)	Kcal/hr	-60.5	-84.4	-145.1	1.1	-1.5	-0.7	-2.2	-0.1	-20.0	-142.6	-14.3	-128.4	0.1	-9.5	-0.1	-0.4	11.3	1.2
Average Density	g/ml	1.078	0.979	1.026	0.001	0.991	0.991	0.991	0.888	0.002	1.021	1.021	1.021	0.001	1.018	0.001	0.001	0.002	0.001

Heat Stream No.	MM kcal/hr
QF400	6.81
QM401	10.14

Work Stream No.	kW
WM401	13613.11
WP400	5.64
WP405	0.09
WP420	0.03
WT400	3490.56
WT405	255.56

Eq. No.	Equipment Name	Req.	Spare	Equipment Type	Mat Const.
A-400	Cellulase Fermentor Agitators	11	0	AXIAL-IMPELLER	SS304
F-400	Cellulase Fermentors	11	0	VERTICAL-VESSEL	SS304L
H-400	Cellulase Fermentation Cooler	11	0	IMMERSED-COIL	SS304
M-401	Fermentor Air Compressor Package	2	1	CENTRIFUGAL	CS
P-400	Cellulase Transfer Pump	1	1	CENTRIFUGAL	SS
P-405	Media Pump	1	1	CENTRIFUGAL	SS
P-420	Anti-foam Pump	1	1	CENTRIFUGAL	CS
T-405	Media-Prep Tank	1	0	VERTICAL-VESSEL	SS304
T-420	Anti-foam Tank	1	0	VERTICAL-VESSEL	POLYETHYLENE

VER	DESCRIPTION	DATE
A	SUBCONTRACTOR UPDATE	4/98
B	BASECASE UPDATE	9/98
C	DESIGN REPORT	2/99
D	FINAL 1999 DESIGN REPORT	6/99
		LL 6/23/99

NREL
NATIONAL RENEWABLE ENERGY LABORATORY
Biotechnology Center For Fuels And Chemicals

SECTION A400
CELLULASE PROD. FERMENTATION

R9906A.xls | PFD-P100-A402 | D

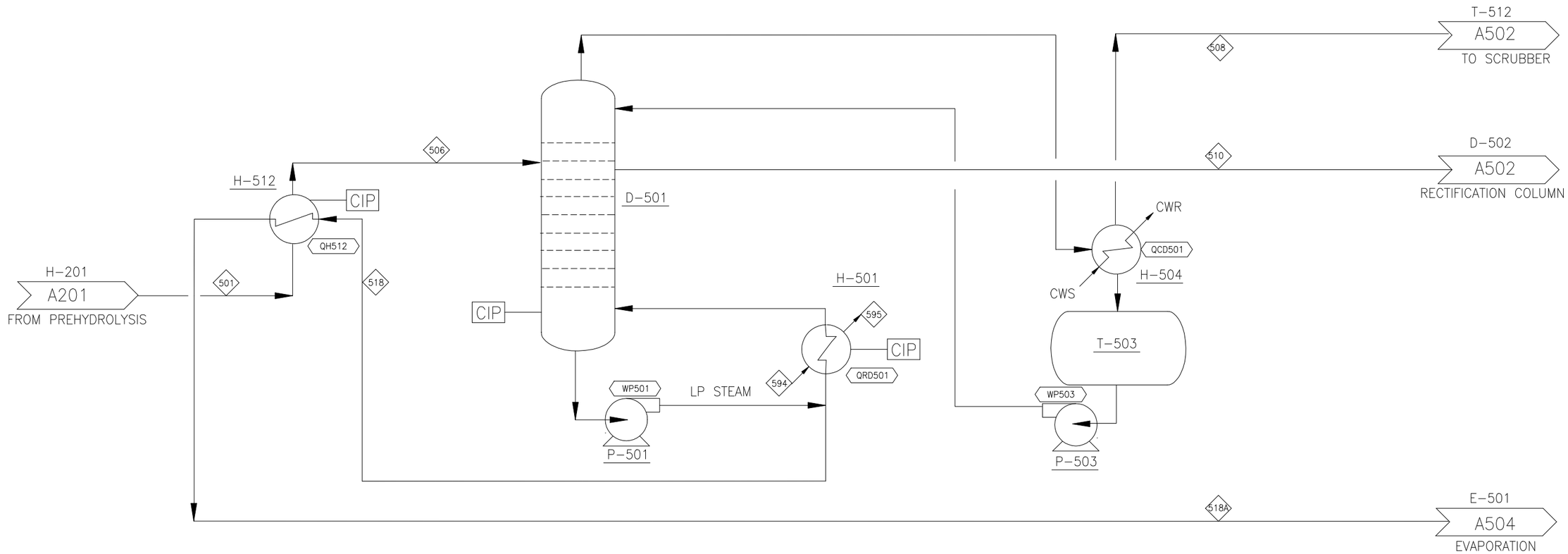

COMPONENT	UNITS	501	506	508	510	518	518A	594	595
Total Flow	kg/hr	380,209	380,209	582	49,456	330,171	330,171	54,459	54,459
Insoluble Solids	%	8.3%	8.3%	0.0%	0.0%	9.6%	9.6%	0.0%	0.0%
Soluble Solids	%	2.9%	2.9%	0.0%	0.5%	3.3%	3.3%	0.0%	0.0%
Temperature	C	95	100	60	114	122	117	164	148
Pressure	atm	4.00	4.76	1.86	1.93	2.10	2.10	4.42	4.42
Vapor Fraction		0.00	0.00	1.00	1.00	0.00	0.00	1.00	0.00
Ethanol	kg/hr	18,701	18,701	71	18,481	149	149		
Water	kg/hr	308,205	308,205	23	29,891	278,290	278,290	54,459	54,459
Glucose (SS)	kg/hr	219	219	0	0	219	219		
Xylose (SS)	kg/hr	721	721	0	0	721	721		
Arabinose (SS)	kg/hr	569	569	0	0	569	569		
Other Sugars (SS)	kg/hr	2,936	2,936	0	0	2,936	2,936		
Cellobiose (SS)	kg/hr	383	383	0	0	383	383		
Glucose Oligomers (SS)	kg/hr	3,021	3,021	0	0	3,021	3,021		
Xylose Oligomers (SS)	kg/hr	1,006	1,006	0	0	1,006	1,006		
Other Oligomers (SS)	kg/hr								
Corn Steep Liquor (SS)	kg/hr	2,327	2,327	0	227	2,100	2,100		
(NH4)2SO4 (SS)	kg/hr								
NH4Acetate (SS)	kg/hr								
Others (Soluble Solids)	kg/hr	29	29	0	0	29	29		
Acetic Acid	kg/hr	2,545	2,545	0	123	2,422	2,422		
Sulfuric Acid	kg/hr	295	295	0	0	295	295		
Furfural	kg/hr	1,010	1,010	0	524	485	485		
HMF	kg/hr	340	340	0	177	164	164		
Carbon Dioxide	kg/hr	487	487	487	0	0	0		
Methane	kg/hr								
Oxygen	kg/hr	0	0	0	0				
Nitrogen	kg/hr	0	0	0	0	0	0		
Ammonia	kg/hr	12	12	0	11	0	0		
NH4OH	kg/hr								
Others	kg/hr	5,787	5,787	0	21	5,766	5,766		
Cellulose (IS)	kg/hr	3,631	3,631			3,631	3,631		
Xylan (IS)	kg/hr	794	794			794	794		
Arabinan (IS)	kg/hr	33	33			33	33		
Other Sugar Polymers (IS)	kg/hr	164	164			164	164		
Cellulase (IS)	kg/hr	624	624			624	624		
Biomass (IS)	kg/hr	245	245			245	245		
Zymo (IS)	kg/hr	1,061	1,061			1,061	1,061		
Lignin (IS)	kg/hr	23,068	23,068			23,068	23,068		
Gypsum (IS)	kg/hr	8	8			8	8		
Ca(OH)2 (IS)	kg/hr								
Others (Insoluble Solids)	kg/hr	1,986	1,986			1,986	1,986		
Enthalpy Flow (millions)	Kcal/hr	-1295.5	-1293.6	-1.2	-117.8	-1147.5	-1149.3	-171.2	-199.3
Average Density	g/ml	0.971	0.966	0.003	0.001	0.965	0.970	0.002	0.865

Heat Stream No.	MM kcal/hr	Work Stream No.	kW
QCD501	0.89	WP501	260.94
QH512	-1.83	WP503	0.51
QRD501	-28.06		

Eq. No.	Equipment Name	Req.	Spare	Equipment Type	Mat Const.
D-501	Beer Column	1	0	DISTILLATION	SS304
H-501	Beer Column Reboiler	1	0	SHELL-TUBE	SS304;CS
H-504	Beer Column Condenser	1	0	SHELL-TUBE	SS304;CS
H-512	Beer Column Feed Interchange	1	1	PLATE-FRAME	SS
P-501	Beer Column Bottoms Pump	1	1	CENTRIFUGAL	SS
P-503	Beer Column Reflux Pump	1	1	CENTRIFUGAL	SS
T-503	Beer Column Relfux Drum	1	0	HORIZONTAL-VESSEL	SS304

VER	DESCRIPTION	DATE
A	SUBCONTRACTOR UPDATE	4/98
B	BASECASE UPDATE	9/98
C	DESIGN REPORT	2/99
D	FINAL 1999 DESIGN REPORT	6/99
		LL 6/23/99

NREL
NATIONAL RENEWABLE ENERGY LABORATORY
Biotechnology Center For Fuels And Chemicals

SECTION A500
BEER DISTILLATION

R9906A.xls | PFD-P100-A501 | D

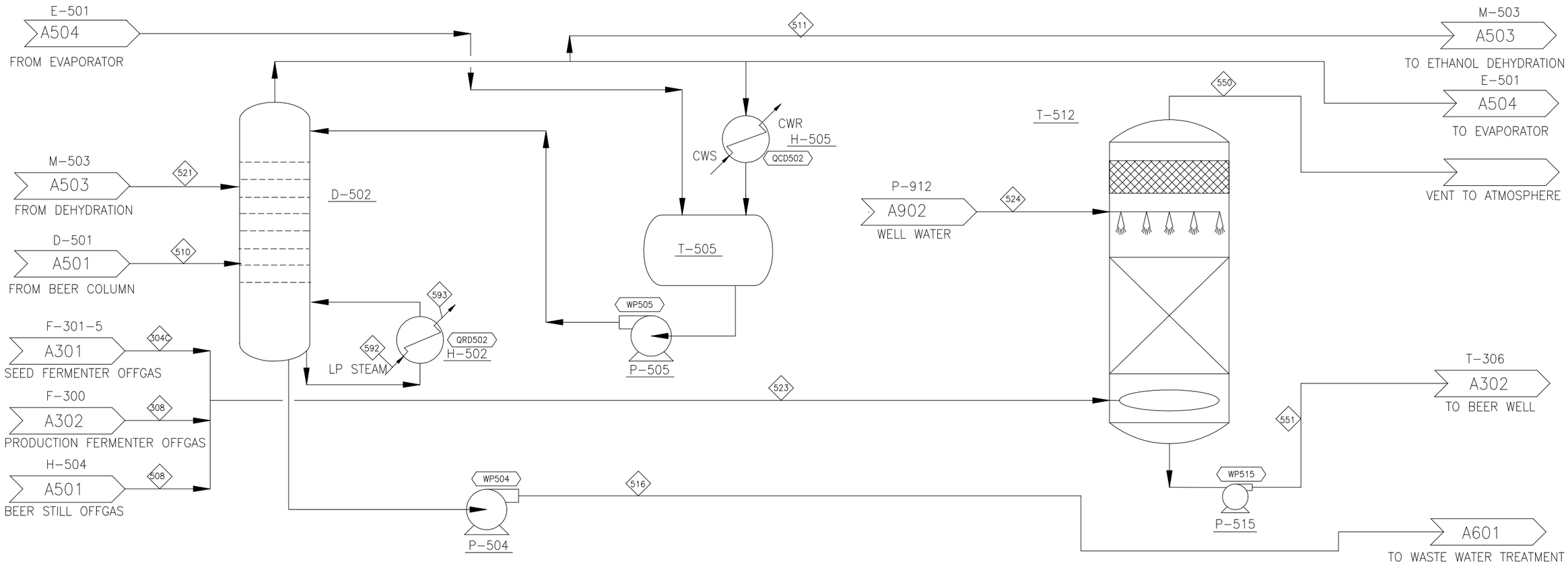

COMPONENT	UNITS	304C	308	508	510	511	516	521	523	524	550	551	592	593
Total Flow	kg/hr	876	16,978	582	49,456	24,982	30,898	6,425	18,437	13,042	17,916	13,562	6,814	6,814
Insoluble Solids	%	0.0%	0.0%	0.0%	0.0%	0.0%	0.0%	0.0%	0.0%	0.0%	0.0%	0.0%	0.0%	0.0%
Soluble Solids	%	0.0%	0.0%	0.0%	0.5%	0.0%	0.7%	0.0%	0.0%	0.0%	0.0%	0.0%	0.0%	0.0%
Temperature	C	30	30	60	114	92	121	70	31	13	18	30	164	148
Pressure	atm	1.00	1.00	1.86	1.93	1.70	2.06	1.53	1.00	1.00	0.90	0.90	4.42	4.42
Vapor Fraction		1.00	1.00	1.00	1.00	1.00	0.00	0.00	1.00	0.00	1.00	0.00	1.00	0.00
Ethanol	kg/hr	7	263	71	18,481	23,108	15	4,643	341		5	337		
Water	kg/hr	15	288	23	29,891	1,874	29,800	1,782	326	13,042	173	13,195	6,814	6,814
Glucose (SS)	kg/hr			0	0		0		0					
Xylose (SS)	kg/hr			0	0		0		0					
Arabinose (SS)	kg/hr			0	0		0		0					
Other Sugars (SS)	kg/hr			0	0		0		0					
Cellobiose (SS)	kg/hr			0	0		0		0					
Glucose Oligomers (SS)	kg/hr			0	0		0		0					
Xylose Oligomers (SS)	kg/hr			0	0		0		0					
Other Oligomers (SS)	kg/hr													
Corn Steep Liquor (SS)	kg/hr	0	2	0	227		227		3		0	3		
(NH4)2SO4 (SS)	kg/hr													
NH4Acetate (SS)	kg/hr													
Others (Soluble Solids)	kg/hr			0	0		0		0					
Acetic Acid	kg/hr	0	1	0	123		123		2		0	2		
Sulfuric Acid	kg/hr	0	0	0	0		0		0		0	0		
Furfural	kg/hr	0	6	0	524		524		7		0	7		
HMF	kg/hr	0	2	0	177		177		2		0	2		
Carbon Dioxide	kg/hr	838	16,281	487	0		0		17,605		17,589	16		
Methane	kg/hr													
Oxygen	kg/hr	15	134	0	0				149		149	0		
Nitrogen	kg/hr	0	1	0	0				1		1	0		
Ammonia	kg/hr		0	0	11		11		0		0	0		
NH4OH	kg/hr													
Others	kg/hr	0	0	0	21		21		0		0	0		
Cellulose (IS)	kg/hr													
Xylan (IS)	kg/hr													
Arabinan (IS)	kg/hr													
Other Sugar Polymers (IS)	kg/hr													
Cellulase (IS)	kg/hr													
Biomass (IS)	kg/hr													
Zymo (IS)	kg/hr													
Lignin (IS)	kg/hr													
Gypsum (IS)	kg/hr													
Ca(OH)2 (IS)	kg/hr													
Others (Insoluble Solids)	kg/hr													
Enthalpy Flow (millions)	Kcal/hr	-1.8	-36.0	-1.2	-117.8	-33.5	-111.4	-13.2	-39.1	-49.5	-38.1	-50.4	-21.4	-24.9
Average Density	g/ml	0.002	0.002	0.003	0.001	0.002	0.900	0.794	0.002	1.005	0.002	0.983	0.002	0.865

Heat Stream No.	MM kcal/hr
QCD502	17.44
QRD502	-3.51

Work Stream No.	kW
WP504	7.62
WP505	12.77
WP515	2.21

Eq. No.	Equipment Name	Req.	Spare	Equipment Type	Mat Const.
D-502	Rectification Column	1	0	DISTILLATION	SS
H-502	Rectification Column Reboiler	1	0	SHELL-TUBE	SS304;CS
H-505	Rectification Column Condenser	1	0	SHELL-TUBE	SS304;CS
P-504	Rectification Column Bottoms Pump	1	1	CENTRIFUGAL	SS
P-505	Rectification Column Reflux Pump	1	1	CENTRIFUGAL	SS
P-515	Scrubber Bottoms Pump	1	0	CENTRIFUGAL	SS
T-505	Rectification Column Reflux Drum	1	0	HORIZONTAL-VESSEL	SS304
T-512	Vent Scrubber	1	0	ABSORBER	SS304;PLASTIC

VER	DESCRIPTION	DATE
A	SUBCONTRACTOR UPDATE	4/98
B	BASECASE UPDATE	9/98
C	DESIGN REPORT	2/99
D	FINAL 1999 DESIGN REPORT	6/99
		LL 6/24/99

NREL
NATIONAL RENEWABLE ENERGY LABORATORY
Biotechnology Center For Fuels And Chemicals

SECTION A500
RECTIFICATION DISTILLATION

R9906A.xls | PFD-P100-A502 | D

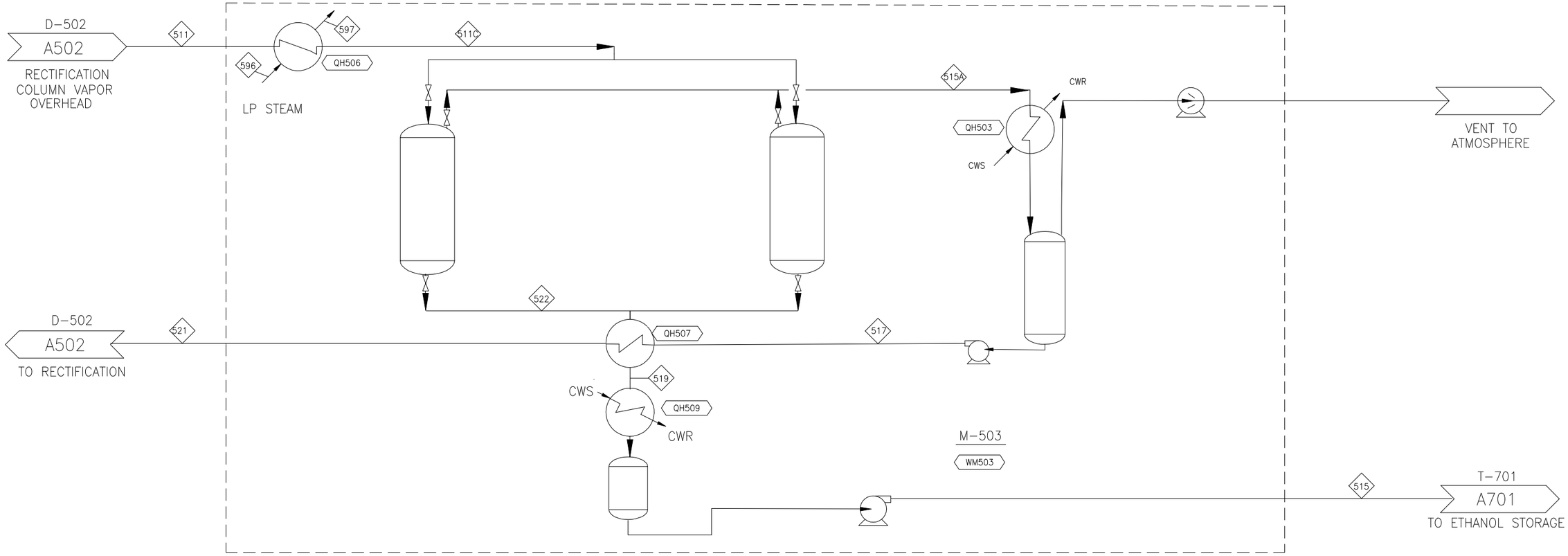

COMPONENT	UNITS	511	511C	515	515A	517	519	521	522	596	597
Total Flow	kg/hr	24,982	24,982	18,557	6,425	6,425	18,557	6,425	6,425	467	467
Insoluble Solids	%	0.0%	0.0%	0.0%	0.0%	0.0%	0.0%	0.0%	0.0%	0.0%	0.0%
Soluble Solids	%	0.0%	0.0%	0.0%	0.0%	0.0%	0.0%	0.0%	0.0%	0.0%	0.0%
Temperature	C	92	116	38	116	35	92	70	70	164	148
Pressure	atm	1.70	1.70	1.00	1.70	0.14	1.44	1.53	1.53	4.42	4.42
Vapor Fraction		1.00	1.00	0.00	1.00	0.00	1.00	0.00	0.00	1.00	0.00
Ethanol	kg/hr	23,108	23,108	18,466	4,643	4,643	18,466	4,643	4,643		
Water	kg/hr	1,874	1,874	92	1,782	1,782	92	1,782	1,782	467	467
Glucose (SS)	kg/hr										
Xylose (SS)	kg/hr										
Arabinose (SS)	kg/hr										
Other Sugars (SS)	kg/hr										
Cellobiose (SS)	kg/hr										
Glucose Oligomers (SS)	kg/hr										
Xylose Oligomers (SS)	kg/hr										
Other Oligomers (SS)	kg/hr										
Corn Steep Liquor (SS)	kg/hr										
(NH4)2SO4 (SS)	kg/hr										
NH4Acetate (SS)	kg/hr										
Others (Soluble Solids)	kg/hr										
Acetic Acid	kg/hr										
Sulfuric Acid	kg/hr										
Furfural	kg/hr										
HMF	kg/hr										
Carbon Dioxide	kg/hr										
Methane	kg/hr										
Oxygen	kg/hr										
Nitrogen	kg/hr										
Ammonia	kg/hr										
NH4OH	kg/hr										
Others	kg/hr										
Cellulose (IS)	kg/hr										
Xylan (IS)	kg/hr										
Arabinan (IS)	kg/hr										
Other Sugar Polymers (IS)	kg/hr										
Cellulase (IS)	kg/hr										
Biomass (IS)	kg/hr										
Zymo (IS)	kg/hr										
Lignin (IS)	kg/hr										
Gypsum (IS)	kg/hr										
Ca(OH)2 (IS)	kg/hr										
Others (Insoluble Solids)	kg/hr										
Enthalpy Flow (millions)	Kcal/hr	-33.5	-33.3	-26.7	-11.1	-13.4	-22.3	-13.2	-13.2	-1.5	-1.7
Average Density	g/ml	0.002	0.002	0.775	0.002	0.831	0.002	0.794	0.794	0.002	0.865

Heat Stream No.	MM kcal/hr
QH503	2.22
QH506	-0.24
QH507	0.18
QH509	4.41

Work Stream No.	kW
WM503	128.99

Eq. No.	Equipment Name	Req.	Spare	Equipment Type	Mat Const.
M-503	Molecular Sieve (9 pieces)	1	0	PACKAGE	SS

VER	DESCRIPTION	DATE
A	SUBCONTRACTOR UPDATE	4/98
B	BASECASE UPDATE	9/98
C	DESIGN REPORT	2/99
D	FINAL 1999 DESIGN REPORT	6/99
		LL 6/24/99

NREL
NATIONAL RENEWABLE ENERGY LABORATORY
Biotechnology Center For Fuels And Chemicals

SECTION A500
ETHANOL DEHYDRATION

R9906A.xls | PFD-P100-A503 | D

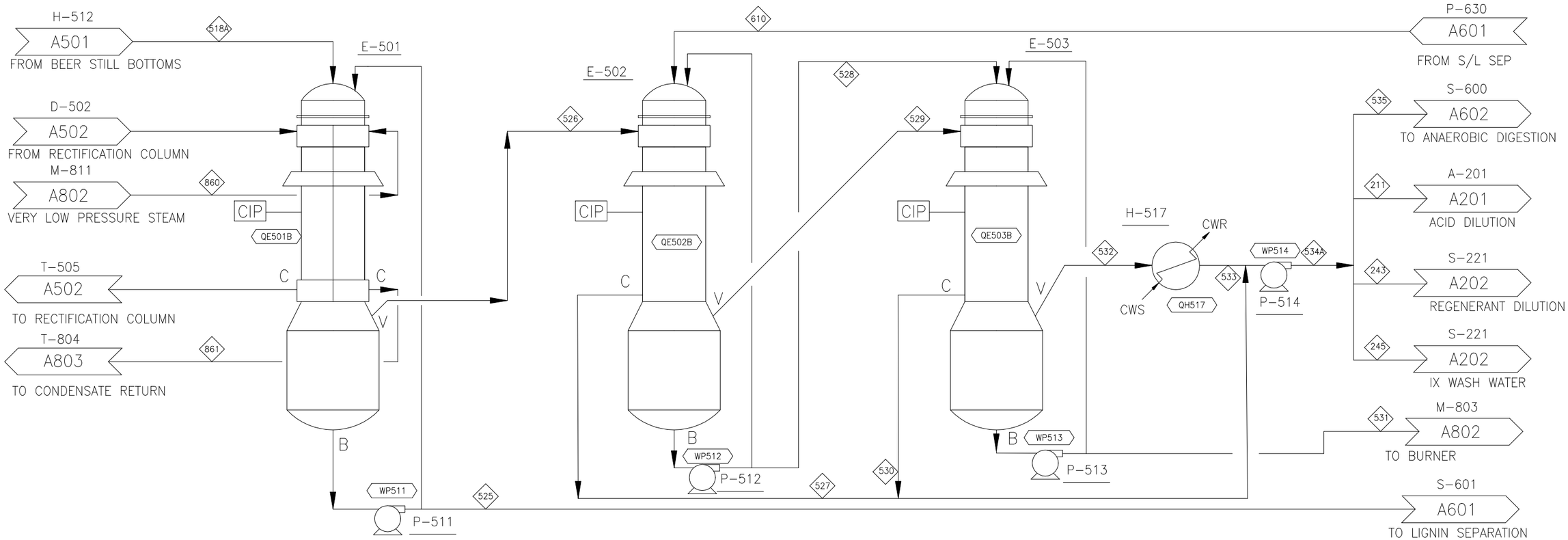

COMPONENT	UNITS	211	243	245	518A	525	526	527	528	529	530	531	532	533	534A	535	610
Total Flow	kg/hr	47,637	65,828	29,862	330,171	269,333	60,838	60,838	75,972	52,320	52,320	24,371	51,601	51,601	164,760	16,476	128,292
Insoluble Solids	%	0.0%	0.0%	0.0%	9.6%	11.7%	0.0%	0.0%	1.5%	0.0%	0.0%	4.8%	0.0%	0.0%	0.0%	0.0%	0.9%
Soluble Solids	%	0.3%	0.0%	0.3%	3.3%	3.9%	0.7%	0.7%	6.1%	0.0%	0.0%	19.1%	0.0%	0.0%	0.3%	0.3%	3.6%
Temperature	C	74	73	74	117	86	86	86	70	70	70	63	63	63	74	74	40
Pressure	atm	3.00	3.00	3.00	2.10	0.58	0.58	0.60	0.30	0.30	0.31	0.21	0.21	0.23	2.00	2.00	3.20
Vapor Fraction		0.00	0.00	0.00	0.00	0.00	1.00	0.00	0.00	1.00	0.00	0.00	1.00	0.00	0.00	0.00	0.00
Ethanol	kg/hr	38		24	149	36	114	114	2	17	17	0	2	2	133	13	19
Water	kg/hr	47,092	65,828	29,520	278,290	218,600	59,690	59,690	65,773	52,037	52,037	14,626	51,147	51,147	162,874	16,287	117,809
Glucose (SS)	kg/hr				219	219											
Xylose (SS)	kg/hr	0		0	721	721	0	0	388	0	0	388	0	0	0	0	388
Arabinose (SS)	kg/hr	0		0	569	569	0	0	307			307	0	0	0	0	307
Other Sugars (SS)	kg/hr				2,936	2,936			1,583			1,583					1,583
Cellobiose (SS)	kg/hr				383	383			207			207					207
Glucose Oligomers (SS)	kg/hr				3,021	3,021			1,628			1,628					1,628
Xylose Oligomers (SS)	kg/hr	0		0	1,006	1,006	0	0	542	0	0	542	0	0	0	0	542
Other Oligomers (SS)	kg/hr																
Corn Steep Liquor (SS)	kg/hr	130		82	2,100	1,649	450	450							450	45	
(NH4)2SO4 (SS)	kg/hr																
NH4Acetate (SS)	kg/hr																
Others (Soluble Solids)	kg/hr				29	29			11			11					11
Acetic Acid	kg/hr	205		129	2,422	2,295	127	127	1,077	159	159	653	424	424	711	71	1,237
Sulfuric Acid	kg/hr	0		0	295	295	0	0	159	0	0	159	0	0	0	0	159
Furfural	kg/hr	117		73	485	173	312	312	16	78	78	1	14	14	404	40	93
HMF	kg/hr	39		25	164	58	105	105	5	26	26	0	5	5	136	14	31
Carbon Dioxide	kg/hr				0												
Methane	kg/hr																
Oxygen	kg/hr																
Nitrogen	kg/hr				0												
Ammonia	kg/hr	0		0	0	0	0	0	0	0	0	0	0	0	0	0	0
NH4OH	kg/hr																
Others	kg/hr	15		9	5,766	5,726	40	40	3,105	3	3	3,096	9	9	52	5	3,108
Cellulose (IS)	kg/hr				3,631	3,631			54			54					54
Xylan (IS)	kg/hr				794	794			12			12					12
Arabinan (IS)	kg/hr				33	33			0			0					0
Other Sugar Polymers (IS)	kg/hr				164	164			2			2					2
Cellulase (IS)	kg/hr				624	624			234			234					234
Biomass (IS)	kg/hr				245	245			92			92					92
Zymo (IS)	kg/hr				1,061	1,061			398			398					398
Lignin (IS)	kg/hr				23,068	23,068			346			346					346
Gypsum (IS)	kg/hr				8	8			0			0					0
Ca(OH)2 (IS)	kg/hr																
Others (Insoluble Solids)	kg/hr				1,986	1,986			30			30					30
Enthalpy Flow (millions)	Kcal/hr	-177.2	-246.3	-111.1	-1149.3	-935.3	-192.0	-224.9	-264.0	-166.2	-195.2	-71.7	-163.9	-192.6	-612.8	-61.3	-462.5
Average Density	g/ml	0.945	0.945	0.945	0.970	1.021	0.000	0.934	0.992	0.000	0.949	1.094	0.000	0.955	0.945	0.945	1.000

Stream No.	MM kcal/hr	Stream No.	kW
QE501B	22.03	WP511	173.06
QE502B	32.29	WP512	35.69
QE503B	28.39	WP513	14.36
QH517	28.70	WP514	27.93

Eq. No.	Equipment Name	Req.	Spare	Equipment Type	Mat Const.
E-501	1st Effect Evaporation	2	0	SHELL-TUBE	SS316
E-502	2nd Effect Evaporation	1	0	SHELL-TUBE	SS316
E-503	3rd Effect Evaporation	2	0	SHELL-TUBE	SS316
H-517	Evaporator Condenser	1	1	SHELL-TUBE	SS304;CS
P-511	1st Effect Pump	2	1	CENTRIFUGAL	SS
P-512	2nd Effect Pump	1	1	CENTRIFUGAL	SS
P-513	3rd Effect Pump	2	1	CENTRIFUGAL	SS
P-514	Evaporator Condensate Pump	1	1	CENTRIFUGAL	SS304

VER	DESCRIPTION	DATE
A	SUBCONTRACTOR UPDATE	4/98
B	BASECASE UPDATE	9/98
C	DESIGN REPORT	2/99
D	FINAL 1999 DESIGN REPORT	6/99
		LL 6/24/99

NATIONAL RENEWABLE ENERGY LABORATORY
Biotechnology Center For Fuels And Chemicals

SECTION A500
EVAPORATOR

R9906A.xls | PFD-P100-A504 | D

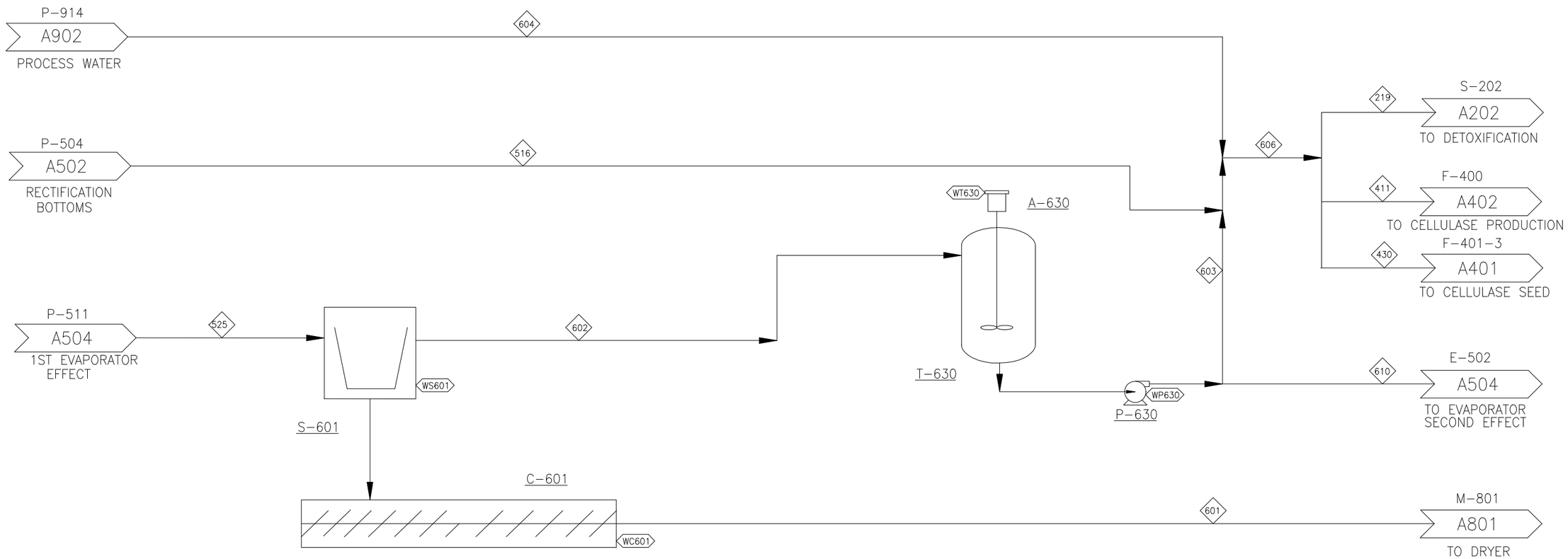

COMPONENT	UNITS	219	411	430	516	525	601	602	603	604	606	610
Total Flow	kg/hr	131,896	22,784	2,147	30,898	269,333	98,277	171,056	42,764	83,163	156,827	128,292
Insoluble Solids	%	0.2%	0.2%	0.2%	0.0%	11.7%	30.6%	0.9%	0.9%	0.0%	0.2%	0.9%
Soluble Solids	%	1.1%	1.1%	1.1%	0.7%	3.9%	4.4%	3.6%	3.6%	0.0%	1.1%	3.6%
Temperature	C	47	47	47	121	86	40	40	40	20	47	40
Pressure	atm	1.00	1.00	1.00	2.06	0.58	3.20	3.20	3.20	1.00	1.00	3.20
Vapor Fraction		0.00	0.00	0.00	0.00	0.00	0.00	0.00	0.00	0.00	0.00	0.00
Ethanol	kg/hr	18	3	0	15	36	10	26	6		22	19
Water	kg/hr	128,033	22,117	2,084	29,800	218,600	61,520	157,079	39,270	83,163	152,234	117,809
Glucose (SS)	kg/hr	0	0	0	0	219	219				0	
Xylose (SS)	kg/hr	109	19	2	0	721	203	518	129		129	388
Arabinose (SS)	kg/hr	86	15	1	0	569	160	409	102		102	307
Other Sugars (SS)	kg/hr	444	77	7	0	2,936	826	2,110	528		528	1,583
Cellobiose (SS)	kg/hr	58	10	1	0	383	108	275	69		69	207
Glucose Oligomers (SS)	kg/hr	456	79	7	0	3,021	850	2,171	543		543	1,628
Xylose Oligomers (SS)	kg/hr	152	26	2	0	1,006	283	723	181		181	542
Other Oligomers (SS)	kg/hr											
Corn Steep Liquor (SS)	kg/hr	191	33	3	227	1,649	1,649				227	
(NH4)2SO4 (SS)	kg/hr											
NH4Acetate (SS)	kg/hr											
Others (Soluble Solids)	kg/hr	3	1	0	0	29	14	14	4		4	11
Acetic Acid	kg/hr	450	78	7	123	2,295	646	1,649	412		535	1,237
Sulfuric Acid	kg/hr	45	8	1	0	295	83	212	53		53	159
Furfural	kg/hr	467	81	8	524	173	49	125	31		556	93
HMF	kg/hr	157	27	3	177	58	16	42	10		187	31
Carbon Dioxide	kg/hr	0	0	0	0						0	
Methane	kg/hr											
Oxygen	kg/hr											
Nitrogen	kg/hr											
Ammonia	kg/hr	10	2	0	11	0	0	0	0		11	0
NH4OH	kg/hr											
Others	kg/hr	889	154	14	21	5,726	1,582	4,144	1,036		1,057	3,108
Cellulose (IS)	kg/hr	15	3	0		3,631	3,559	73	18		18	54
Xylan (IS)	kg/hr	3	1	0		794	778	16	4		4	12
Arabinan (IS)	kg/hr	0	0	0		33	32	1	0		0	0
Other Sugar Polymers (IS)	kg/hr	1	0	0		164	161	3	1		1	2
Cellulase (IS)	kg/hr	66	11	1		624	312	312	78		78	234
Biomass (IS)	kg/hr	26	4	0		245	123	123	31		31	92
Zymo (IS)	kg/hr	112	19	2		1,061	531	531	133		133	398
Lignin (IS)	kg/hr	97	17	2		23,068	22,607	461	115		115	346
Gypsum (IS)	kg/hr	0	0	0		8	8	0	0		0	0
Ca(OH)2 (IS)	kg/hr											
Others (Insoluble Solids)	kg/hr	8	1	0		1,986	1,946	40	10		10	30
Enthalpy Flow (millions)	Kcal/hr	-488.6	-84.4	-8.0	-111.4	-935.3	-328.5	-616.7	-154.2	-315.4	-581.0	-462.5
Average Density	g/ml	0.979	0.979	0.979	0.900	1.021	1.158	1.000	1.000	0.998	0.979	1.000

Heat Stream No.	MM kcal/hr

Work Stream No.	kW
WC601	62.80
WP630	39.16
WS601	958.86
WT630	4.50

Eq. No.	Equipment Name	Req.	Spare	Equipment Type	Mat Const.
A-630	Recycled Water Tank Agitator	1	0	FIXED-PROP	CS
C-601	Lignin Wet Cake Screw	1	0	SCREW	CS
P-630	Recycled Water Pump	1	1	CENTRIFUGAL	CS
S-601	Beer Column Bottoms Centrifuge	3	0	CENTRIFUGE	316SS
T-630	Recycled Water Tank	1	0	FLAT-BTM-STORAGE	CS

VER	DESCRIPTION	DATE
A	SUBCONTRACTOR UPDATE	4/98
B	BASECASE UPDATE	9/98
C	WWT UPDATE	11/98
D	DESIGN REPORT	2/99
E	FINAL 1999 DESIGN REPORT	6/99
		LL 6/24/99

NREL NATIONAL RENEWABLE ENERGY LABORATORY
Biotechnology Center For Fuels And Chemicals

SECTION A600
LIGNIN SEPARATION & RECYCLE

R9906A.xls | PFD-P100-A601 | E

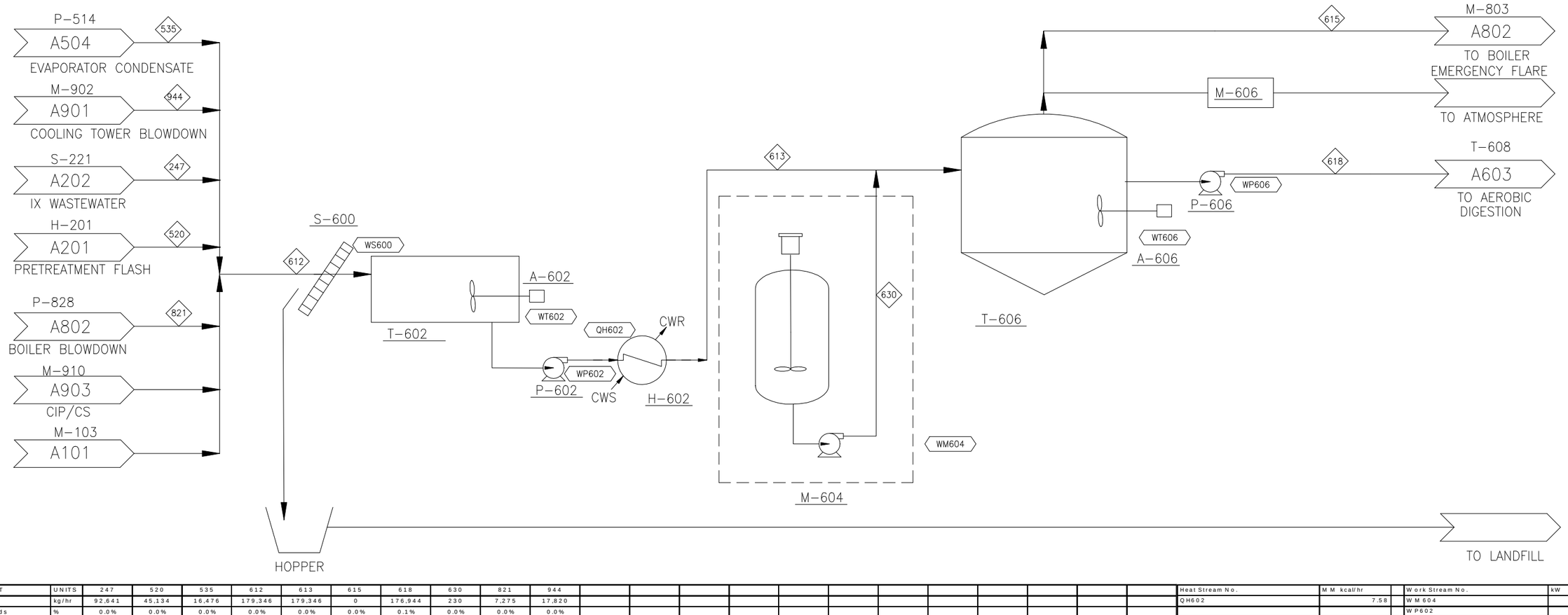

COMPONENT	UNITS	247	520	535	612	613	615	618	630	821	944
Total Flow	kg/hr	92,641	45,134	16,476	179,346	179,346	0	176,944	230	7,275	17,820
Insoluble Solids	%	0.0%	0.0%	0.0%	0.0%	0.0%	0.0%	0.1%	0.0%	0.0%	0.0%
Soluble Solids	%	4.9%	0.1%	0.3%	2.6%	2.6%	0.0%	0.2%	0.0%	0.0%	0.0%
Temperature	C	40	100	74	79	35		35	20	309	28
Pressure	atm	3.00	1.00	2.00	2.00	2.00		1.00	1.00	96.26	1.00
Vapor Fraction		0.00	0.07	0.00	0.00	0.00	0.00	0.00	0.00	0.00	0.00
Ethanol	kg/hr		29	13	42	42		3			
Water	kg/hr	87,893	43,822	16,287	173,098	173,098		175,675		7,275	17,820
Glucose (SS)	kg/hr										
Xylose (SS)	kg/hr		0	0	0	0		0			
Arabinose (SS)	kg/hr		0	0	0	0					
Other Sugars (SS)	kg/hr										
Cellobiose (SS)	kg/hr										
Glucose Oligomers (SS)	kg/hr										
Xylose Oligomers (SS)	kg/hr		0	0	0	0					
Other Oligomers (SS)	kg/hr										
Corn Steep Liquor (SS)	kg/hr		31	45	76	76		76			
(NH4)2SO4 (SS)	kg/hr	915			915	915					
NH4Acetate (SS)	kg/hr	3,606			3,606	3,606		252			
Others (Soluble Solids)	kg/hr										
Acetic Acid	kg/hr		265	71	336	336		24			
Sulfuric Acid	kg/hr		0	0	0	0					
Furfural	kg/hr		736	40	777	777		54			
HMF	kg/hr		248	14	262	262		18			
Carbon Dioxide	kg/hr							46			
Methane	kg/hr							2			
Oxygen	kg/hr										
Nitrogen	kg/hr										
Ammonia	kg/hr	7	0	0	7	7		7			
NH4OH	kg/hr	219			219	219		189			
Others	kg/hr		3	5	8	8		429	230		
Cellulose (IS)	kg/hr										
Xylan (IS)	kg/hr										
Arabinan (IS)	kg/hr										
Other Sugar Polymers (IS)	kg/hr										
Cellulase (IS)	kg/hr										
Biomass (IS)	kg/hr							169			
Zymo (IS)	kg/hr										
Lignin (IS)	kg/hr										
Gypsum (IS)	kg/hr										
Ca(OH)2 (IS)	kg/hr										
Others (Insoluble Solids)	kg/hr										
Enthalpy Flow (millions)	Kcal/hr	-347.3	-162.2	-61.3	-663.5	-671.1		-666.4	-0.9	-25.3	-67.4
Average Density	g/ml	0.914	0.009	0.945	0.910	0.950		0.982	0.998	0.693	0.991

Heat Stream No.	MM kcal/hr
QH602	7.58

Work Stream No.	kW
WM604	7.64
WP602	43.15
WP606	41.17
WS600	0.77
WT602	25.56
WT606	123.43

Eq. No.	Equipment Name	Req.	Spare	Equipment Type	Mat Const.
A-602	Equalization Basin Agitator	1	0	FIXED-PROP	SS
A-606	Anaerobic Agitator	4	0	FIXED-PROP	SS
H-602	Anaerobic Digestor Feed Cooler	1	0	SHELL-TUBE	SS316;CS
M-604	Nutrient Feed System	1	0	PACKAGE	CS
M-606	Biogas Emergency Flare	1	0	MISCELLANEOUS	SS
P-602	Anaerobic Reactor Feed Pump	1	1	CENTRIFUGAL	CS
P-606	Aerobic Digestor Feed Pump	1	1	CENTRIFUGAL	CS
S-600	Bar Screen	1	0	SCREEN	CS
T-602	Equalization Basin	1	0	FLAT-BTM-STORAGE	CONCRETE
T-606	Anaerobic Digestor	4	0	FLAT-BTM-STORAGE	EPOXY-LINED

VER	DESCRIPTION	DATE
A	SUBCONTRACTOR UPDATE	4/98
B	BASECASE UPDATE	9/98
C	WWT UPDATE	11/98
D	DESIGN REPORT	2/99
E	FINAL 1999 DESIGN REPORT	6/99
		LL 6/24/99

NREL
NATIONAL RENEWABLE ENERGY LABORATORY
Biotechnology Center For Fuels And Chemicals

SECTION A600
ANAEROBIC DIGESTION

R9906A.xls | PFD-P100-A602 | E

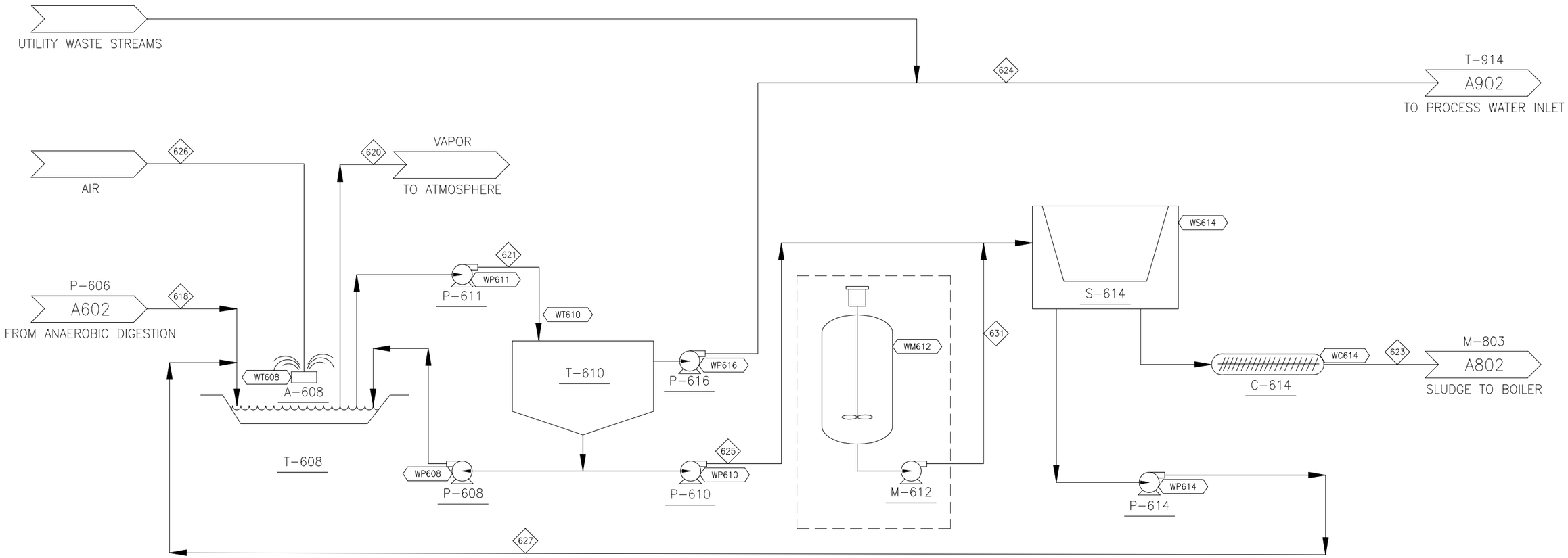

COMPONENT	UNITS	618	620	621	623	624	625	626	627	631
Total Flow	kg/hr	176,944	156,028	178,667	918	173,154	5,513	153,155	4,596	1
Insoluble Solids	%	0.1%	0.0%	0.2%	29.9%	0.0%	5.0%	0.0%	0.0%	0.0%
Soluble Solids	%	0.2%	0.0%	0.1%	0.0%	0.1%	0.1%	0.0%	0.1%	0.0%
Temperature	C	35	21	21	21	21	21	20	21	20
Pressure	atm	1.00	1.00	1.00	1.00	1.00	1.00	1.00	1.00	1.00
Vapor Fraction		0.00	1.00	0.00	0.00	0.00	0.00	1.00	0.00	0.00
Ethanol	kg/hr	3	0	0	0	0	0		0	
Water	kg/hr	175,675	2,430	177,981	641	172,755	5,226		4,584	
Glucose (SS)	kg/hr									
Xylose (SS)	kg/hr	0								
Arabinose (SS)	kg/hr									
Other Sugars (SS)	kg/hr									
Cellobiose (SS)	kg/hr									
Glucose Oligomers (SS)	kg/hr									
Xylose Oligomers (SS)	kg/hr									
Other Oligomers (SS)	kg/hr									
Corn Steep Liquor (SS)	kg/hr	76	1	77	0	75	2		2	
(NH4)2SO4 (SS)	kg/hr									
NH4Acetate (SS)	kg/hr	252		25	0	25	1		1	
Others (Soluble Solids)	kg/hr									
Acetic Acid	kg/hr	24	0	2	0	2	0		0	
Sulfuric Acid	kg/hr									
Furfural	kg/hr	54	1	5	0	4	0		0	
HMF	kg/hr	18	0	2	0	1	0		0	
Carbon Dioxide	kg/hr	46	341	0	0	0	0		0	
Methane	kg/hr	2	2	0	0	0	0		0	
Oxygen	kg/hr		31,898	1	0	1	0	32,162	0	
Nitrogen	kg/hr		121,017	3	0	3	0	120,992	0	
Ammonia	kg/hr	7	1	6	0	5	0		0	
NH4OH	kg/hr	189	157	33	0	32	1		1	
Others	kg/hr	429	179	257	1	250	8		7	1
Cellulose (IS)	kg/hr									
Xylan (IS)	kg/hr									
Arabinan (IS)	kg/hr									
Other Sugar Polymers (IS)	kg/hr									
Cellulase (IS)	kg/hr									
Biomass (IS)	kg/hr	169		275	275		275			
Zymo (IS)	kg/hr									
Lignin (IS)	kg/hr									
Gypsum (IS)	kg/hr									
Ca(OH)2 (IS)	kg/hr									
Others (Insoluble Solids)	kg/hr									
Enthalpy Flow (millions)	Kcal/hr	-666.4	-8.8	-676.4	-2.7	-656.2	-20.1	-0.2	-17.4	0.0
Average Density	g/ml	0.982	0.001	0.998	1.148	0.997	1.022	0.001	0.997	0.998

Heat Stream No.	MM kcal/hr

Work Stream No.	kW
WC614	5.25
WM612	3.83
WP608	1.24
WP610	0.73
WP611	40.92
WP614	1.05
WP616	39.68
WS614	21.31
WT608	619.00
WT610	3.82

Eq. No.	Equipment Name	Req.	Spare	Equipment Type	Mat Const.
A-608	Aerobic Lagoon Agitators	16	0	SURFACE-AERATOR	CS
C-614	Aerobic Sludge Screw	1	0	SCREW	CS
M-612	Filter Precoat System	1	0	MISCELLANEOUS	CS
P-608	Aerobic Sludge Recycle Pump	1	0	SLURRY	SS316
P-610	Aerobic Sludge Pump	1	0	SLURRY	SS316
P-611	Aerobic Digestion Outlet Pump	1	1	CENTRIFUGAL	CS
P-614	Sludge Filtrate Recycle Pump	1	1	CENTRIFUGAL	CS
P-616	Treated Water Pump	1	1	CENTRIFUGAL	CS
S-614	Belt Filter Press	1	0	FILTER-PRESS	304SS;BUNA N
T-608	Aerobic Digestor	1	0	LINED-PIT	POLYMER LINED
T-610	Clarifier	1	0	CLARIFIER	CONCRETE

VER	DESCRIPTION	DATE
A	SUBCONTRACTOR UPDATE	4/98
B	BASECASE UPDATE	9/98
C	WWT UPDATE	11/98
D	DESIGN REPORT	2/99
E	FINAL 1999 DESIGN REPORT	6/99
		LL 6/24/99

NREL
NATIONAL RENEWABLE ENERGY LABORATORY
Biotechnology Center For Fuels And Chemicals

SECTION A600
AEROBIC DIGESTION

R9906A.xls | PFD-P100-A603 | E

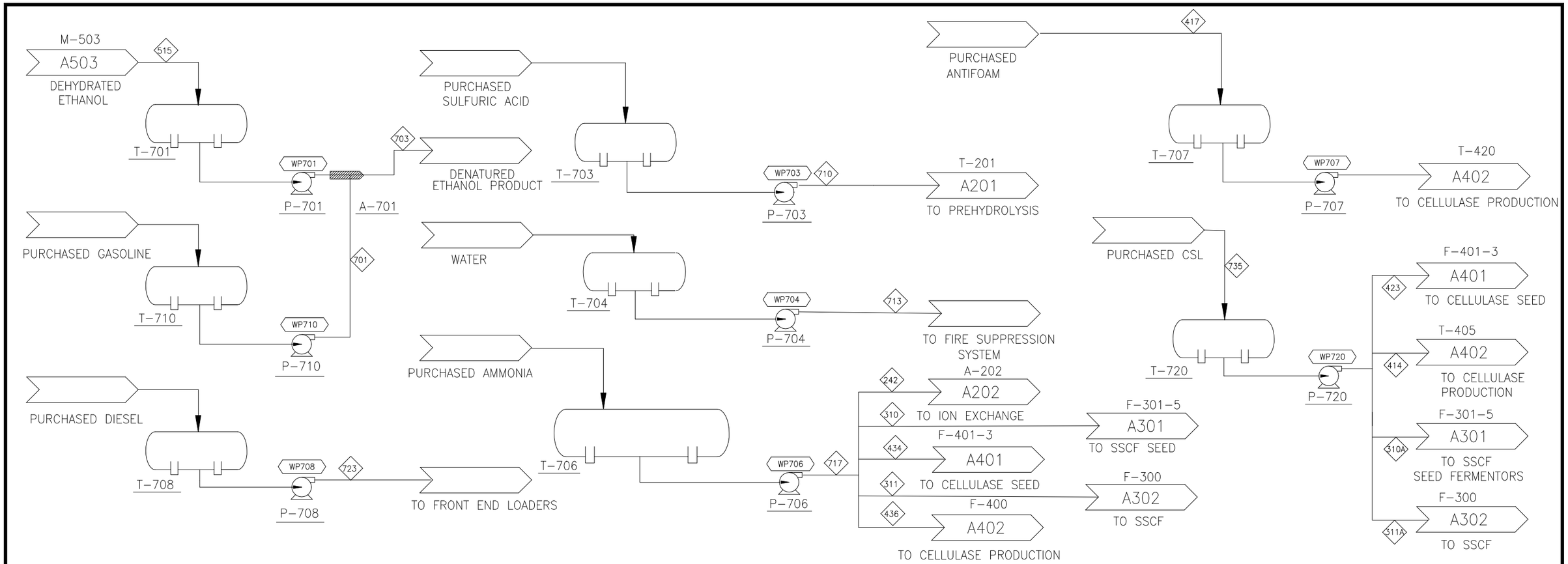

COMPONENT	UNITS	242	310	310A	311	311A	414	417	423	434	436	515	701	703	710	713	717	723	735
Total Flow	kg/hr	1,128	8	584	129	960	406	227	30	8	157	18,565	888	19,452	1,868	6,828	1,408	443	1,979
Insoluble Solids	%	0.0%	0.0%	0.0%	0.0%	0.0%	0.0%	0.0%	0.0%	0.0%	0.0%	0.0%	0.0%	0.0%	0.0%	0.0%	0.0%	0.0%	0.0%
Soluble Solids	%	0.0%	0.0%	100.0%	0.0%	100.0%	100.0%	0.0%	100.0%	0.0%	0.0%	0.0%	0.0%	0.0%	0.0%	0.0%	0.0%	0.0%	100.0%
Temperature	C	20	35	35	35	35	28	28	28	28	28	38	20	37	20	20	20	20	20
Pressure	atm	17.00	1.00	1.00	1.00	1.00	1.00	1.00	1.00	1.00	1.00	1.00	1.00	1.00	1.00	1.00	17.00	1.00	1.00
Vapor Fraction		0.00	1.00	0.00	1.00	0.00	0.00	0.00	0.00	1.00	1.00	0.00	0.00	0.00	0.00	0.00	0.00	0.00	0.00
Ethanol	kg/hr											18,473		18,473					
Water	kg/hr											92		92		6,828			
Glucose (SS)	kg/hr																		
Xylose (SS)	kg/hr																		
Arabinose (SS)	kg/hr																		
Other Sugars (SS)	kg/hr																		
Cellobiose (SS)	kg/hr																		
Glucose Oligomers (SS)	kg/hr																		
Xylose Oligomers (SS)	kg/hr																		
Other Oligomers (SS)	kg/hr																		
Corn Steep Liquor (SS)	kg/hr			584		960	406		30										1,979
(NH4)2SO4 (SS)	kg/hr																		
NH4Acetate (SS)	kg/hr																		
Others (Soluble Solids)	kg/hr																		
Acetic Acid	kg/hr																		
Sulfuric Acid	kg/hr														1,868				
Furfural	kg/hr																		
HMF	kg/hr																		
Carbon Dioxide	kg/hr																		
Methane	kg/hr																		
Oxygen	kg/hr																		
Nitrogen	kg/hr																		
Ammonia	kg/hr	1,128	8		129					8	145						1,408		
NH4OH	kg/hr																		
Others	kg/hr							227		0	12		888	888				443	
Cellulose (IS)	kg/hr																		
Xylan (IS)	kg/hr																		
Arabinan (IS)	kg/hr																		
Other Sugar Polymers (IS)	kg/hr																		
Cellulase (IS)	kg/hr																		
Biomass (IS)	kg/hr																		
Zymo (IS)	kg/hr																		
Lignin (IS)	kg/hr																		
Gypsum (IS)	kg/hr																		
Ca(OH)2 (IS)	kg/hr																		
Others (Insoluble Solids)	kg/hr																		
Enthalpy Flow (millions)	Kcal/hr	-1.0	0.0	-2.2	-0.1	-3.6	-1.5	-0.1	-0.1	0.0	-0.1	-26.8	-0.5	-27.2	-3.6	-25.9	-1.3	-0.2	-7.5
Average Density	g/ml	0.610	0.001	0.984	0.001	0.984	0.991	0.888	0.991	0.001	0.001	0.757	0.688	0.753	3.102	0.998	0.610	0.688	0.998

Heat Stream	Mmkcal/hr

Work Stream No.	kW
WP701	3.94
WP703	0.13
WP704	0.00
WP706	0.08
WP707	0.03
WP708	0.11
WP710	0.37
WP720	0.43

Eq. No.	Equipment Name	Req.	Spare	Equipment Type	Mat Const.
A-701	Denaturant In-line Mixer	1	0	STATIC	SS304
P-701	Ethanol Product Pump	2	1	CENTRIFUGAL	CS
P-703	Sulfuric Acid Pump	1	1	CENTRIFUGAL	SS316
P-704	Firewater Pump	1	1	CENTRIFUGAL	CS
P-706	Ammonia Pump	1	1	CENTRIFUGAL	CS
P-707	Antifoam Store Pump	1	1	CENTRIFUGAL	CS
P-708	Diesel Pump	1	1	CENTRIFUGAL	CS
P-710	Gasoline Pump	1	1	CENTRIFUGAL	CS
P-720	CSL Pump	1	1	CENTRIFUGAL	CS
T-701	Ethanol Product Storage Tank	2	0	FLAT-BTM-STORAGE	A285C
T-703	Sulfuric Acid Storage Tank	1	0	FLAT-BTM-STORAGE	SS316
T-704	Firewater Storage Tank	1	0	FLAT-BTM-STORAGE	A285C
T-706	Ammonia Storage Tank	1	0	HORIZONTAL-STORAGE	A515
T-707	Antifoam Storage Tank	1	0	FLAT-BTM-STORAGE	A285C
T-708	Diesel Storage Tank	1	0	FLAT-BTM-STORAGE	A285C
T-710	Gasoline Storage Tank	1	0	FLAT-BTM-STORAGE	A285C
T-720	CSL Storage Tank	1	0	FLAT-BTM-STORAGE	SS304

VER	DESCRIPTION	DATE
A	SUBCONTRACTOR UPDATE	4/98
B	BASECASE UPDATE	9/98
C	DESIGN REPORT	2/99
D	FINAL 1999 DESIGN REPORT	6/99
		LL 6/24/99

NATIONAL RENEWABLE ENERGY LABORATORY
Biotechnology Center For Fuels And Chemicals

SECTION A700
STORAGE

R9906A.xls

PFD-P100-A701 D

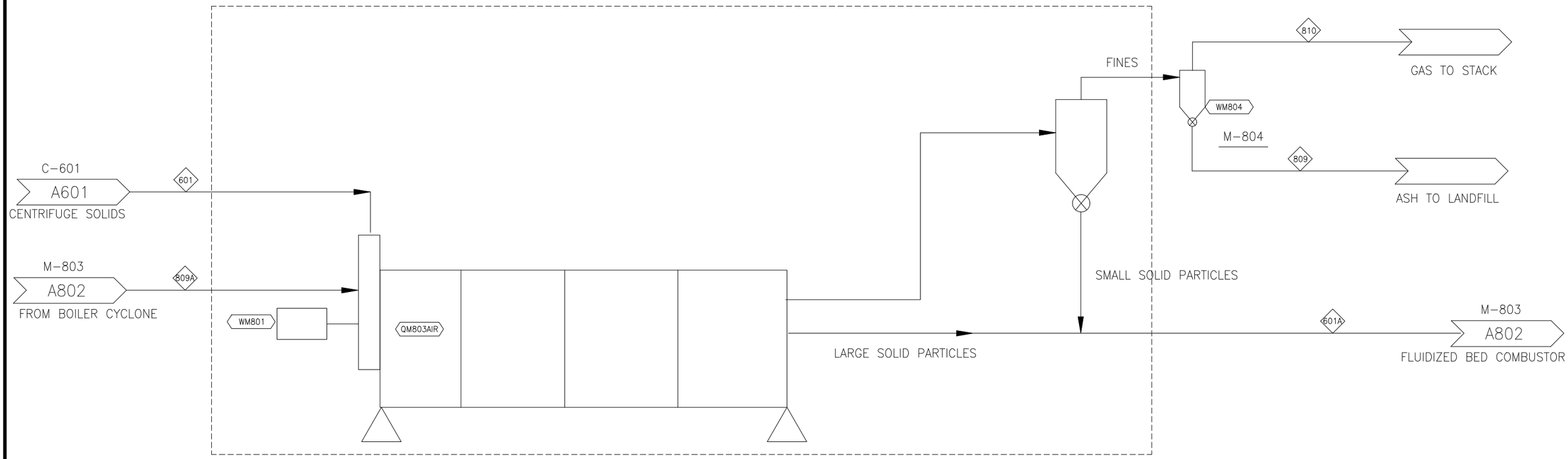

COMPONENT	UNITS	601	601A	809	809A	810
Total Flow	kg/hr	98,277	73,669	1,106	597,905	596,800
Insoluble Solids	%	30.6%	40.8%	100.0%	0.2%	0.0%
Soluble Solids	%	4.4%	5.0%	0.0%	0.3%	0.3%
Temperature	C	40	101		167	167
Pressure	atm	3.20	1.00		0.97	0.97
Vapor Fraction		0.00	0.00	0.00	1.00	1.00
Ethanol	kg/hr	10	1		9	9
Water	kg/hr	61,520	37,744		121,379	121,379
Glucose (SS)	kg/hr	219	219		2	2
Xylose (SS)	kg/hr	203	203		6	6
Arabinose (SS)	kg/hr	160	160		5	5
Other Sugars (SS)	kg/hr	826	826		24	24
Cellobiose (SS)	kg/hr	108	108		3	3
Glucose Oligomers (SS)	kg/hr	850	850		25	25
Xylose Oligomers (SS)	kg/hr	283	283		8	8
Other Oligomers (SS)	kg/hr					
Corn Steep Liquor (SS)	kg/hr	1,649	1,012		1,650	1,650
(NH4)2SO4 (SS)	kg/hr					
NH4Acetate (SS)	kg/hr				0	0
Others (Soluble Solids)	kg/hr	14	14		0	0
Acetic Acid	kg/hr	646	567		91	91
Sulfuric Acid	kg/hr	83	83		4	4
Furfural	kg/hr	49	11		38	38
HMF	kg/hr	16	4		13	13
Carbon Dioxide	kg/hr				96,814	96,814
Methane	kg/hr				13	13
Oxygen	kg/hr				17,956	17,956
Nitrogen	kg/hr				358,079	358,079
Ammonia	kg/hr	0	0		0	0
NH4OH	kg/hr				30	30
Others	kg/hr	1,582	1,527		638	638
Cellulose (IS)	kg/hr	3,559	3,559	36	36	0
Xylan (IS)	kg/hr	778	778	8	8	0
Arabinan (IS)	kg/hr	32	32	0	0	0
Other Sugar Polymers (IS)	kg/hr	161	161	2	2	0
Cellulase (IS)	kg/hr	312	312	5	5	0
Biomass (IS)	kg/hr	123	123	5	5	0
Zymo (IS)	kg/hr	531	531	9	9	0
Lignin (IS)	kg/hr	22,607	22,607	227	230	3
Gypsum (IS)	kg/hr	8	8	8	8	0
Ca(OH)2 (IS)	kg/hr					
Others (Insoluble Solids)	kg/hr	1,946	1,946	806	816	10
Enthalpy Flow (millions)	Kcal/hr	-328.5	-233.1	-2.9	-581.3	-578.3
Average Density	g/ml	1.158	1.186	2.480	0.005	0.001

Heat Stream No.	MM kcal/hr
QM803AIR	17.49

Work Stream No.	kW
WM801	1421.83
WM804	176.00

Eq. No.	Equipment Name	Req.	Spare	Equipment Type	Mat Const.
M-801	Solid Feed Rotary Dryer	1	0	MISCELLANEOUS	
M-804	Combustion Gas Baghouse	1	0	FABRIC-FILTER	A285C;FABRIC

	SCALE	DATE
A	SUBCONTRACTOR UPDATE	4/98
B	DESIGN REPORT	4/99
D	FINAL 1999 DESIGN REPORT	6/99
		LL-6/24/99

NREL
NATIONAL RENEWABLE ENERGY LABORATORY
Biotechnical Center For Fuels And Chemicals

SECTION A800
BOILER FEED DRYING

R9906A.xls | PFD-P100-A801 | D

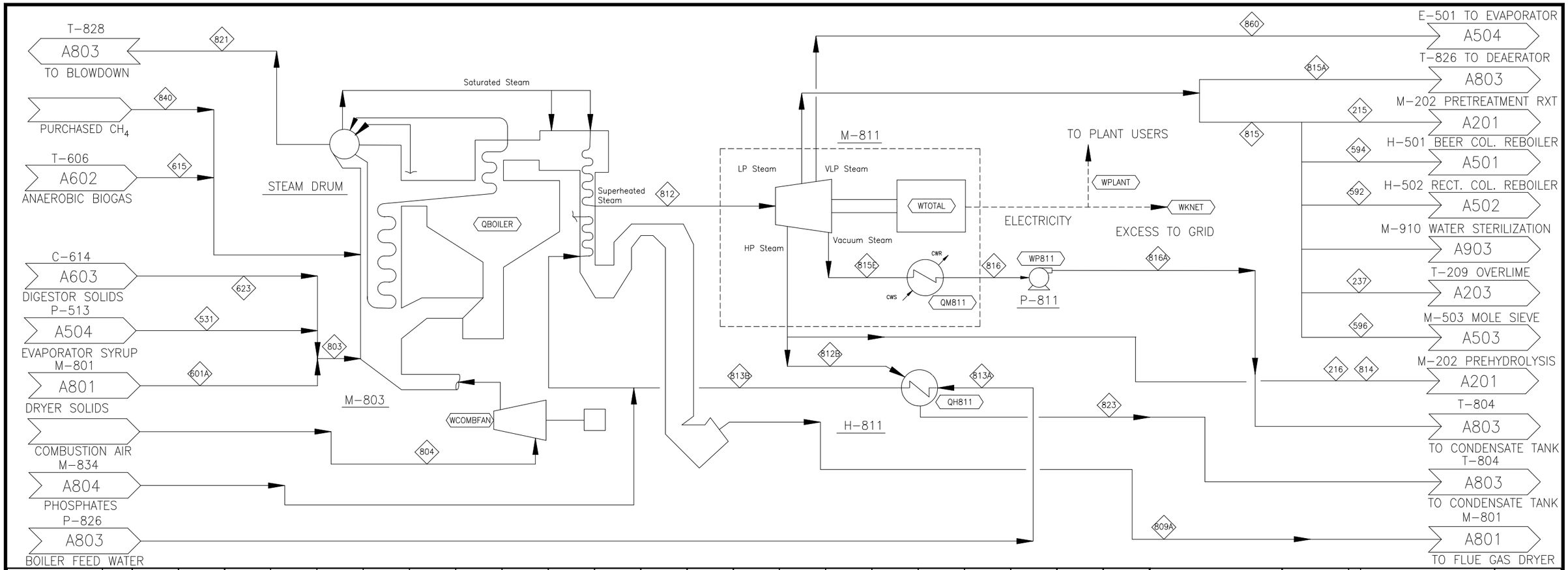

COMPONENT	UNITS	531	601A	615	623	803	804	809A	812	812A	812B	813A	813B	814	815	815A	815C	816	816A	821	823	840	860
Total Flow	kg/hr	24,371	73,669	2,632	918	98,957	471,708	597,905	235,213	235,213	18,164	242,501	242,501	44,596	81,200	25,921	65,332	55,510	55,510	7,275	18,164	0	9,823
Insoluble Solids	%	4.8%	40.8%	0.0%	29.9%	31.8%	0.0%	0.2%	0.0%	0.0%	0.0%	0.0%	0.0%	0.0%	0.0%	0.0%	0.0%	0.0%	0.0%	0.0%	0.0%	0.0%	0.0%
Soluble Solids	%	19.1%	5.0%	0.0%	0.0%	8.4%	0.0%	0.3%	0.0%	0.0%	0.0%	0.0%	0.0%	0.0%	0.0%	0.0%	0.0%	0.0%	0.0%	0.0%	0.0%	0.0%	0.0%
Temperature	C	63	101	35	21	86	24	167	510	268	268	139	177	268	164	164	115	46	46	309	190	25	115
Pressure	atm	0.21	1.00	1.00	1.00	1.00	1.00	0.97	86.06	13.00	13.00	98.31	97.63	13.00	4.42	4.42	1.68	0.10	4.20	96.26	12.32	1.00	1.68
Vapor Fraction		0.00	0.00	1.00	0.00	0.00	1.00	1.00	1.00	1.00	1.00	0.00	0.00	1.00	1.00	1.00	0.97	0.00	0.00	0.00	0.00	1.00	0.97
Ethanol	kg/hr	0	1	0	0	1		9															
Water	kg/hr	14,626	37,744	115	641	53,011	6,132	121,379	235,213	235,213	18,164	242,501	242,501	44,596	81,200	25,921	65,332	55,510	55,510	7,275	18,164		9,823
Glucose (SS)	kg/hr		219			219		2															
Xylose (SS)	kg/hr	388	203			591		6															
Arabinose (SS)	kg/hr	307	160			467		5															
Other Sugars (SS)	kg/hr	1,583	826			2,409		24															
Cellobiose (SS)	kg/hr	207	108			314		3															
Glucose Oligomers (SS)	kg/hr	1,628	850			2,479		25															
Xylose Oligomers (SS)	kg/hr	542	283			825		8															
Other Oligomers (SS)	kg/hr																						
Corn Steep Liquor (SS)	kg/hr		1,012	0	0	1,012		1,650															
(NH4)2SO4 (SS)	kg/hr																						
NH4Acetate (SS)	kg/hr				0	0		0															
Others (Soluble Solids)	kg/hr	11	14			25		0															
Acetic Acid	kg/hr	653	567	0	0	1,220		91															
Sulfuric Acid	kg/hr	159	83			242		4															
Furfural	kg/hr	1	11	0	0	12		38															
HMF	kg/hr	0	4	0	0	4		13															
Carbon Dioxide	kg/hr			1,137	0	0		96,814															
Methane	kg/hr			1,292	0	0		13														0	
Oxygen	kg/hr				0	0	107,738	17,956															
Nitrogen	kg/hr				0	0	357,838	358,079															
Ammonia	kg/hr	0	0	0	0	0		0															
NH4OH	kg/hr			30	0	0		30															
Others	kg/hr	3,096	1,527	57	1	4,624		638															
Cellulose (IS)	kg/hr	54	3,559			3,613		36															
Xylan (IS)	kg/hr	12	778			790		8															
Arabinan (IS)	kg/hr	0	32			33		0															
Other Sugar Polymers (IS)	kg/hr	2	161			164		2															
Cellulase (IS)	kg/hr	234	312			546		5															
Biomass (IS)	kg/hr	92	123		275	489		5															
Zymo (IS)	kg/hr	398	531			929		9															
Lignin (IS)	kg/hr	346	22,607			22,953		230															
Gypsum (IS)	kg/hr	0	8			8		8															
Ca(OH)2 (IS)	kg/hr																						
Others (Insoluble Solids)	kg/hr	30	1,946			1,976		816															
Enthalpy Flow (millions)	Kcal/hr	-71.7	-233.1	-4.2	-2.7	-307.5	-19.8	-581.3	-705.4	-730.3	-56.4	-890.9	-881.5	-138.5	-255.9	-81.7	-208.2	-209.2	-209.2	-25.3	-65.8	0.0	-31.3
Average Density	g/ml	1.094	1.186	0.001	1.148	1.163	0.001	0.005	0.026	0.006	0.006	0.932	0.896	0.006	0.002	0.002	0.001	0.990	0.990	0.693	0.876	0.001	0.001

Heat Stream No.	MM kcal/hr		Work Stream No.	kW
QBOILER	150.67		WCOMBFAN	208.29
QH811	-9.40		WKNET	-10941.82
QM803AIR	17.49		WP811	10.07
QM811	27.69		WTOTAL	-43533.54

Eq. No.	Equipment Name	Req.	Spare	Equipment Type	Mat Const.
H-811	BFW Preheater	1	0	SHELL-TUBE	SS304
M-803	Fluidized Bed Combustion Reactor	1	0	MISCELLANEOUS	CS
M-811	Turbine/Generator	1	0	STEAM-TURBINE	0
P-811	Turbine Condensate Pump	2	0	CENTRIFUGAL	SS304

VER	DESCRIPTION	DATE
A	SUBCONTRACTOR UPDATE	4/98
B	BASECASE UPDATE	9/98
C	DESIGN REPORT	4/99
D	FINAL 1999 DESIGN REPORT	6/99
		LL 6/24/99

NREL
NATIONAL RENEWABLE ENERGY LABORATORY
Biotechnology Center For Fuels And Chemicals

SECTION A800
COMBUSTOR AND TURBO GENERATOR

R9906A.xls | PFD-P100-A802 | D

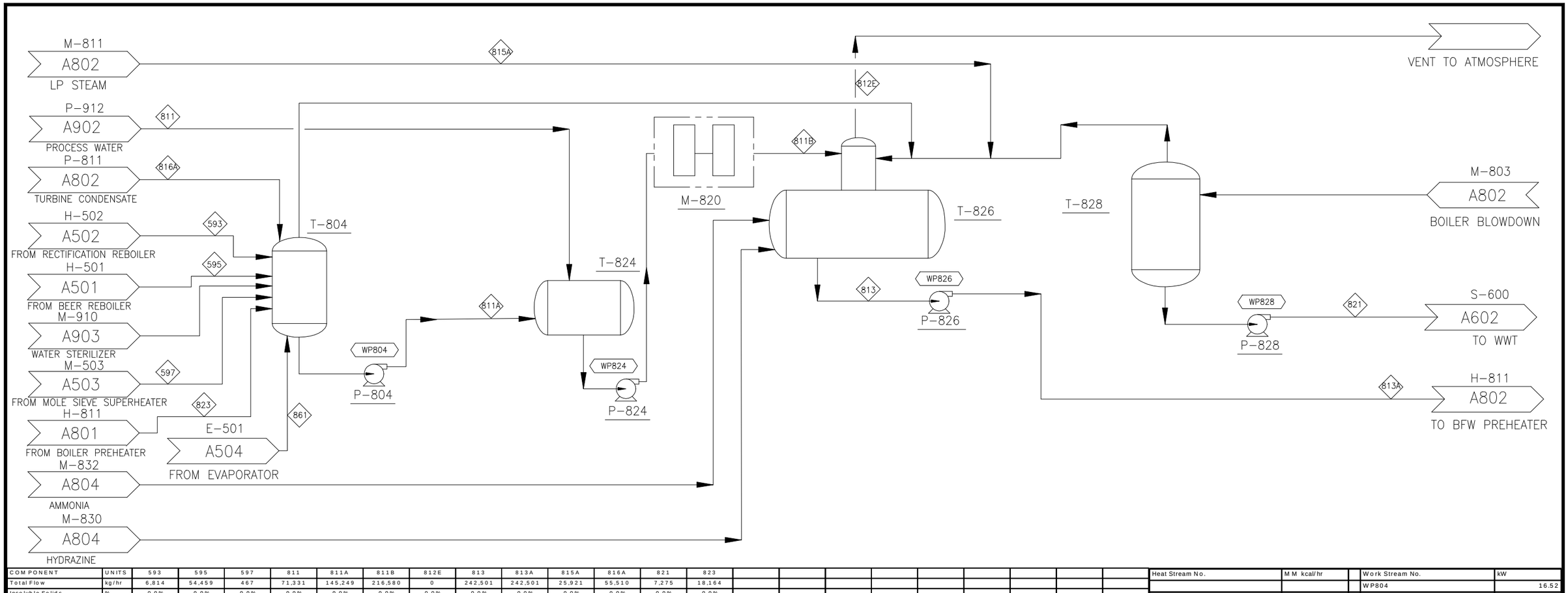

COMPONENT	UNITS	593	595	597	811	811A	811B	812E	813	813A	815A	816A	821	823
Total Flow	kg/hr	6,814	54,459	467	71,331	145,249	216,580	0	242,501	242,501	25,921	55,510	7,275	18,164
Insoluble Solids	%	0.0%	0.0%	0.0%	0.0%	0.0%	0.0%	0.0%	0.0%	0.0%	0.0%	0.0%	0.0%	0.0%
Soluble Solids	%	0.0%	0.0%	0.0%	0.0%	0.0%	0.0%	0.0%	0.0%	0.0%	0.0%	0.0%	0.0%	0.0%
Temperature	C	148	148	148	26	99	75		137	139	164	46	309	190
Pressure	atm	4.42	4.42	4.42	3.40	1.70	3.40	3.30	3.30	98.31	4.42	4.20	96.26	12.32
Vapor Fraction		0.00	0.00	0.00	0.00	0.00	0.00	0.00	0.00	0.00	1.00	0.00	0.00	0.00
Ethanol	kg/hr													
Water	kg/hr	6,814	54,459	467	71,331	145,249	216,580		242,501	242,501	25,921	55,510	7,275	18,164
Glucose (SS)	kg/hr													
Xylose (SS)	kg/hr													
Arabinose (SS)	kg/hr													
Other Sugars (SS)	kg/hr													
Cellobiose (SS)	kg/hr													
Glucose Oligomers (SS)	kg/hr													
Xylose Oligomers (SS)	kg/hr													
Other Oligomers (SS)	kg/hr													
Corn Steep Liquor (SS)	kg/hr													
(NH4)2SO4 (SS)	kg/hr													
NH4Acetate (SS)	kg/hr													
Others (Soluble Solids)	kg/hr													
Acetic Acid	kg/hr													
Sulfuric Acid	kg/hr													
Furfural	kg/hr													
HMF	kg/hr													
Carbon Dioxide	kg/hr													
Methane	kg/hr													
Oxygen	kg/hr													
Nitrogen	kg/hr													
Ammonia	kg/hr													
NH4OH	kg/hr													
Others	kg/hr													
Cellulose (IS)	kg/hr													
Xylan (IS)	kg/hr													
Arabinan (IS)	kg/hr													
Other Sugar Polymers (IS)	kg/hr													
Cellulase (IS)	kg/hr													
Biomass (IS)	kg/hr													
Zymo (IS)	kg/hr													
Lignin (IS)	kg/hr													
Gypsum (IS)	kg/hr													
Ca(OH)2 (IS)	kg/hr													
Others (Insoluble Solids)	kg/hr													
Enthalpy Flow (millions)	Kcal/hr	-24.9	-199.3	-1.7	-270.2	-539.7	-809.9		-891.6	-890.9	-81.7	-209.2	-25.3	-65.8
Average Density	g/ml	0.865	0.865	0.865	0.997	0.959	0.975		0.928	0.932	0.002	0.990	0.693	0.876

Heat Stream No.	M M kcal/hr	Work Stream No.	kW
		WP804	16.52
		WP824	13.84
		WP826	894.72
		WP828	2.29

Eq. No.	Equipment Name	Req.	Spare	Equipment Type	Mat Const.
M-820	Hot Process Water Softener System	1	0	PACKAGE	0
P-804	Condensate Pump	2	0	CENTRIFUGAL	SS316
P-824	Deaerator Feed Pump	2	0	CENTRIFUGAL	SS304
P-826	BFW Pump	5	0	CENTRIFUGAL	SS316
P-828	Blowdown Pump	2	0	CENTRIFUGAL	CS
T-804	Condensate Collection Tank	1	0	VERTICAL-VESSEL	A285C
T-824	Condensate Surge Drum	1	0	HORIZONTAL-VESSEL	SS304
T-826	Deaerator	1	0	HORIZONTAL-VESSEL	CS;SS316
T-828	Blowdown Flash Drum	1	0	HORIZONTAL-VESSEL	CS

VER	DESCRIPTION	DATE
A	SUBCONTRACTOR UPDATE	4/98
B	BASECASE UPDATE	9/98
C	DESIGN REPORT	4/99
D	FINAL 1999 DESIGN REPORT	6/99
		LL 6/24/99

NATIONAL RENEWABLE ENERGY LABORATORY
Biotechnology Center For Fuels And Chemicals

SECTION A800
BOILER FEED WATER PREPARATION

R9906A.xls | PFD-P100-A803 | D

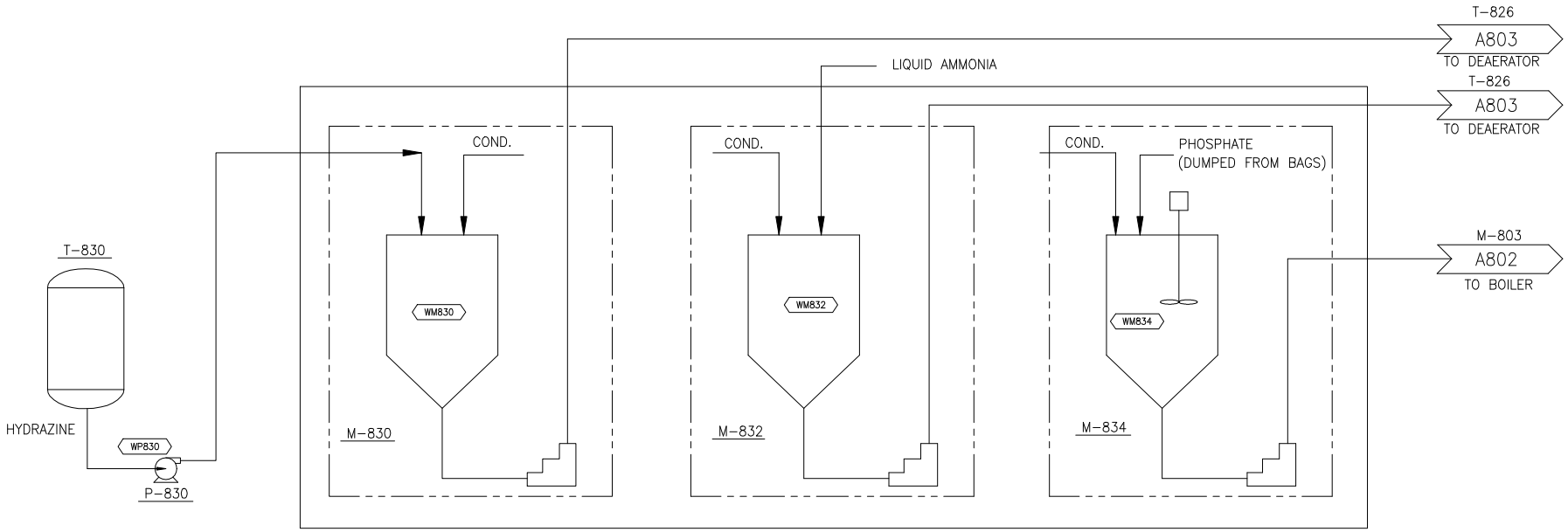

COMPONENT	UNITS
Total Flow	kg/hr
Insoluble Solids	%
Soluble Solids	%
Temperature	C
Pressure	atm
Vapor Fraction	
Ethanol	kg/hr
Water	kg/hr
Glucose (SS)	kg/hr
Xylose (SS)	kg/hr
Arabinose (SS)	kg/hr
Other Sugars (SS)	kg/hr
Cellobiose (SS)	kg/hr
Glucose Oligomers (SS)	kg/hr
Xylose Oligomers (SS)	kg/hr
Other Oligomers (SS)	kg/hr
Corn Steep Liquor (SS)	kg/hr
(NH4)2SO4 (SS)	kg/hr
NH4Acetate (SS)	kg/hr
Others (Soluble Solids)	kg/hr
Acetic Acid	kg/hr
Sulfuric Acid	kg/hr
Furfural	kg/hr
HMF	kg/hr
Carbon Dioxide	kg/hr
Methane	kg/hr
Oxygen	kg/hr
Nitrogen	kg/hr
Ammonia	kg/hr
NH4OH	kg/hr
Others	kg/hr
Cellulose (IS)	kg/hr
Xylan (IS)	kg/hr
Arabinan (IS)	kg/hr
Other Sugar Polymers (IS)	kg/hr
Cellulase (IS)	kg/hr
Biomass (IS)	kg/hr
Zymo (IS)	kg/hr
Lignin (IS)	kg/hr
Gypsum (IS)	kg/hr
Ca(OH)2 (IS)	kg/hr
Others (Insoluble Solids)	kg/hr
Enthalpy Flow (millions)	Kcal/hr
Average Density	g/ml

Heat Stream No.	MM kcal/hr

Work Stream No.	kW
WP830	0.03
WM830	10.00
WM832	10.00
WM834	10.00

Eq. No.	Equipment Name	Req.	Spare	Equipment Type	Mat Const.
M-830	Hydrazine Addition Pkg.	1	0	PACKAGE	0
M-832	Ammonia Addition Pkg	1	0	PACKAGE	0
M-834	Phosphate Addition Pkg.	1	0	PACKAGE	0
P-830	Hydrazine Transfer Pump	1	0	CENTRIFUGAL	CS
T-830	Hydrazine Drum	1	0	VERTICAL-VESSEL	SS316

	SCALE	DATE
A	SUBCONTRACTOR UPDATE	4/98
B	BASECASE UPDATE	9/98
C	DESIGN REPORT	4/99
D	FINAL 1999 DESIGN REPORT	6/99

LL-6/24/99

NREL
NATIONAL RENEWABLE ENERGY LABORATORY
Biotechnology Center For Fuels And Chemicals

SECTION A800
BOILER FEED WATER CHEMICALS

R9906A.xls | PFD-P100-A804 | D

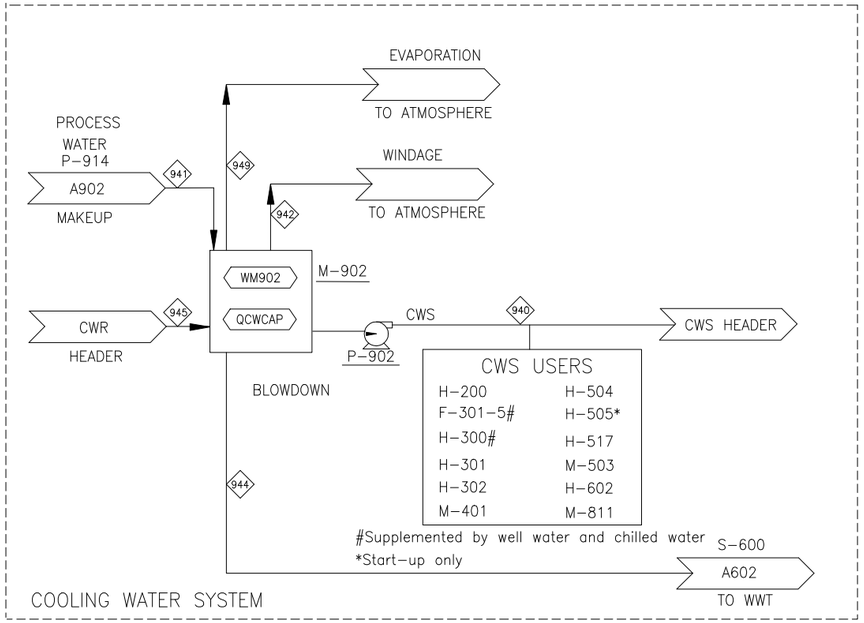

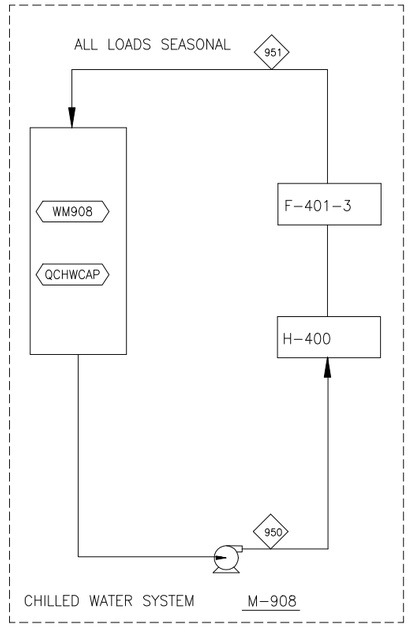

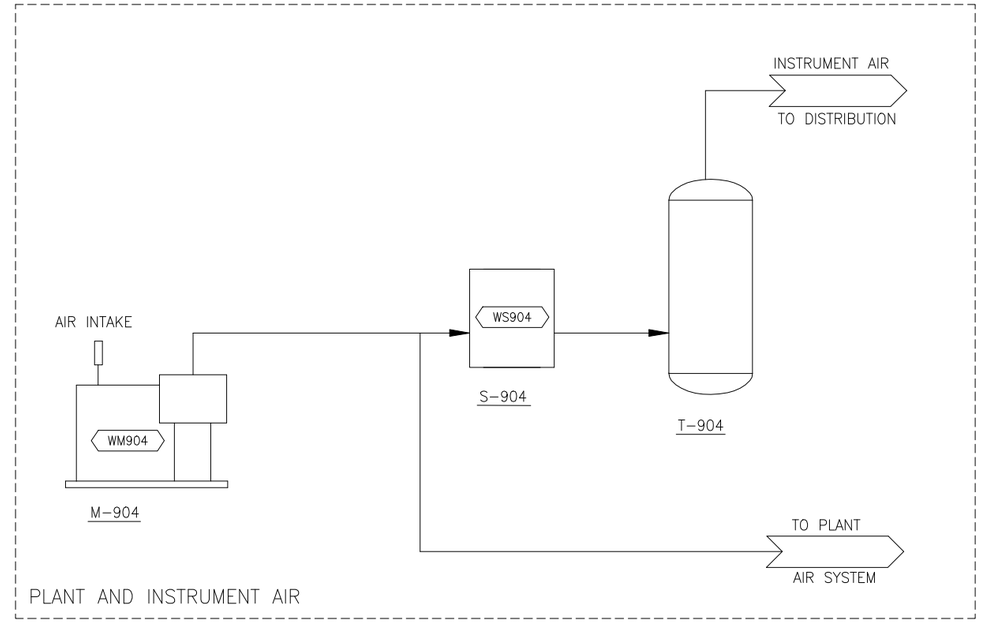

COMPONENT	UNITS	940	941	942	944	945	949	950	951
Total Flow	kg/hr	13,840,700	196,024	11,516	17,820	13,840,700	166,688	4,878,840	4,878,840
Insoluble Solids	%	0.0%	0.0%	0.0%	0.0%	0.0%	0.0%	0.0%	0.0%
Soluble Solids	%	0.0%	0.0%	0.0%	0.0%	0.0%	0.0%	0.0%	0.0%
Temperature	C	37	28	28	28	28	28	4	8
Pressure	atm	4.08	1.00	1.00	1.00	4.08	0.04	4.08	4.08
Vapor Fraction		0.00	0.00	0.00	0.00	0.00	1.00	0.00	0.00
Ethanol	kg/hr								
Water	kg/hr	13,840,700	196,024	11,516	17,820	13,840,700	166,688	4,878,840	4,878,840
Glucose (SS)	kg/hr								
Xylose (SS)	kg/hr								
Arabinose (SS)	kg/hr								
Other Sugars (SS)	kg/hr								
Cellobiose (SS)	kg/hr								
Glucose Oligomers (SS)	kg/hr								
Xylose Oligomers (SS)	kg/hr								
Other Oligomers (SS)	kg/hr								
Corn Steep Liquor (SS)	kg/hr								
(NH4)2SO4 (SS)	kg/hr								
NH4Acetate (SS)	kg/hr								
Others (Soluble Solids)	kg/hr								
Acetic Acid	kg/hr								
Sulfuric Acid	kg/hr								
Furfural	kg/hr								
HMF	kg/hr								
Carbon Dioxide	kg/hr								
Methane	kg/hr								
Oxygen	kg/hr								
Nitrogen	kg/hr								
Ammonia	kg/hr								
NH4OH	kg/hr								
Others	kg/hr								
Cellulose (IS)	kg/hr								
Xylan (IS)	kg/hr								
Arabinan (IS)	kg/hr								
Other Sugar Polymers (IS)	kg/hr								
Cellulase (IS)	kg/hr								
Biomass (IS)	kg/hr								
Zymo (IS)	kg/hr								
Lignin (IS)	kg/hr								
Gypsum (IS)	kg/hr								
Ca(OH)2 (IS)	kg/hr								
Others (Insoluble Solids)	kg/hr								
Enthalpy Flow (millions)	Kcal/hr	-52268.9	-741.9	-43.6	-67.4	-52385.2	-534.2	-18572.0	-18554.6
Average Density	g/ml	0.982	0.991	0.991	0.991	0.991	0.000	1.014	1.010

Heat Stream No.	MM kcal/hr
QCWCAP	116.24
QCHWCAP	17.43

Work Stream No.	kW
WM902	745.49
WM904	186.40
WM908	1346.93
WS904	12.00

Eq. No.	Equipment Name	Req.	Spare	Equipment Type	Mat Const.
M-902	Cooling Tower System	1	0	INDUCED-DRAFT	FIBERGLASS
M-904	Plant Air Compressor	2	1	RECIPROCATING	CS
M-908	Chilled Water Package	3	0	CENTRIFUGAL	CS
P-902	Cooling Water Pumps	1	1	CENTRIFUGAL	CS
S-904	Instrument Air Dryer	1	1	PACKAGE	CS
T-904	Plant Air Receiver	1	0	HORIZONTAL-VESSEL	CS

VER	DESCRIPTION	DATE
A	SUBCONTRACTOR UPDATE	4/98
B	BASECASE UPDATE	9/98
C	WWT UPDATE	11/98
D	FINAL 1999 DESIGN REPORT	6/99
		LL 6/24/99

NREL
NATIONAL RENEWABLE ENERGY LABORATORY
Biotechnology Center For Fuels And Chemicals

SECTION A900
COOLING WTR PLNT & INST AIR SYS

R9906A.xls | PFD-P100-A901 | D

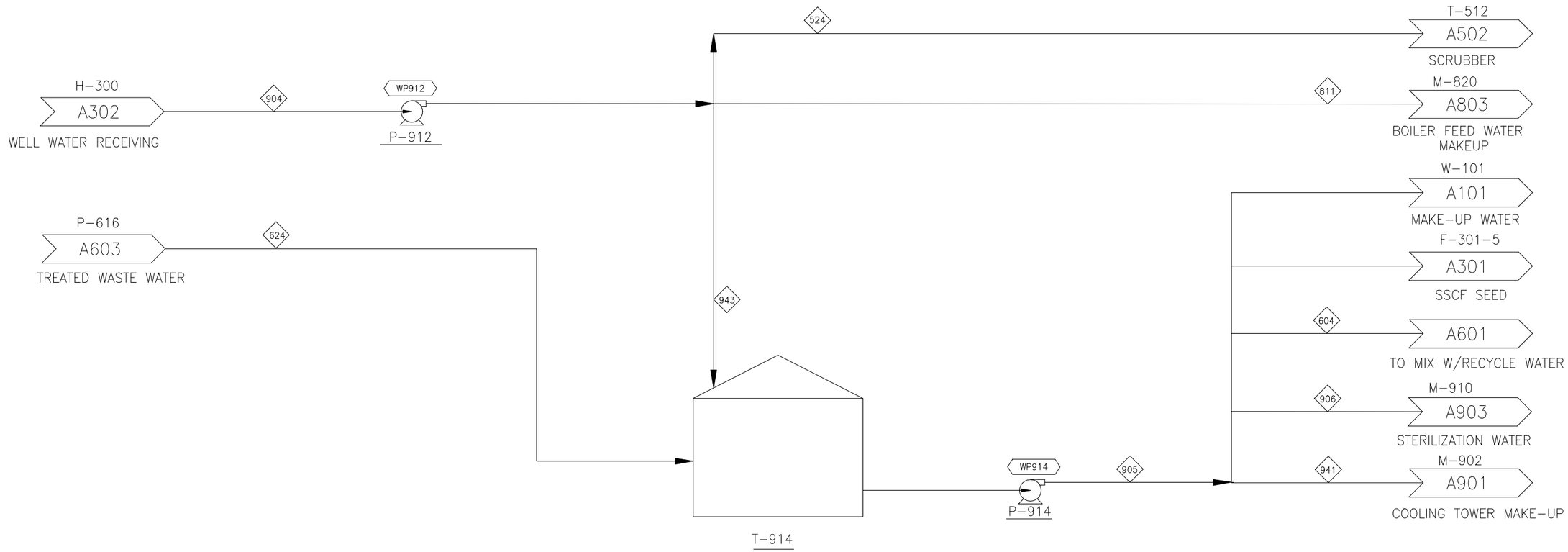

COMPONENT	UNITS	524	604	624	811	904	905	906	941	943
Total Flow	kg/hr	13,042	83,163	173,154	71,331	185,593	274,375	63	196,024	101,220
Insoluble Solids	%	0.0%	0.0%	0.0%	0.0%	0.0%	0.0%	0.0%	0.0%	0.0%
Soluble Solids	%	0.0%	0.0%	0.1%	0.0%	0.0%	0.0%	0.0%	0.0%	0.0%
Temperature	C	13	20	21	26	26	24	20	28	28
Pressure	atm	1.00	1.00	1.00	3.40	1.00	1.00	1.00	1.00	1.00
Vapor Fraction		0.00	0.00	0.00	0.00	0.00	0.00	0.00	0.00	0.00
Ethanol	kg/hr			0			0			
Water	kg/hr	13,042	83,163	172,755	71,331	185,593	273,976	63	196,024	101,220
Glucose (SS)	kg/hr									
Xylose (SS)	kg/hr									
Arabinose (SS)	kg/hr									
Other Sugars (SS)	kg/hr									
Cellobiose (SS)	kg/hr									
Glucose Oligomers (SS)	kg/hr									
Xylose Oligomers (SS)	kg/hr									
Other Oligomers (SS)	kg/hr									
Corn Steep Liquor (SS)	kg/hr			75			75			
(NH4)2SO4 (SS)	kg/hr									
NH4Acetate (SS)	kg/hr			25			25			
Others (Soluble Solids)	kg/hr									
Acetic Acid	kg/hr			2			2			
Sulfuric Acid	kg/hr									
Furfural	kg/hr			4			4			
HMF	kg/hr			1			1			
Carbon Dioxide	kg/hr			0			0			
Methane	kg/hr			0			0			
Oxygen	kg/hr			1			1			
Nitrogen	kg/hr			3			3			
Ammonia	kg/hr			5			5			
NH4OH	kg/hr			32			32			
Others	kg/hr			250			250			
Cellulose (IS)	kg/hr									
Xylan (IS)	kg/hr									
Arabinan (IS)	kg/hr									
Other Sugar Polymers (IS)	kg/hr									
Cellulase (IS)	kg/hr									
Biomass (IS)	kg/hr									
Zymo (IS)	kg/hr									
Lignin (IS)	kg/hr									
Gypsum (IS)	kg/hr									
Ca(OH)2 (IS)	kg/hr									
Others (Insoluble Solids)	kg/hr									
Enthalpy Flow (millions)	Kcal/hr	-49.5	-315.4	-656.2	-270.2	-702.8	-1039.4	-0.2	-741.9	-383.1
Average Density	g/ml	1.005	0.998	0.997	0.997	0.993	0.995	0.998	0.991	0.991

Heat Stream No.	MM kcal/hr	Work Stream No.	kW
		WP912	20.73
		WP914	60.24

Eq. No.	Equipment Name	Req.	Spare	Equipment Type	Mat Const.
P-912	Make-up Water Pump	1	1	CENTRIFUGAL	CS
P-914	Process Water Circulating Pump	2	1	CENTRIFUGAL	CS
T-914	Process Water Tank	1	0	FLAT-BTM-STORAGE	CS

VER	DESCRIPTION	DATE
A	SUBCONTRACTOR UPDATE	4/98
B	BASECASE UPDATE	9/98
C	DESIGN REPORT	2/99
D	FINAL 1999 DESIGN REPORT	6/99
		LL 6/25/99

NREL NATIONAL RENEWABLE ENERGY LABORATORY
Biotechnology Center For Fuels And Chemicals

SECTION A900
PROCESS WATER

R9906A.xls | PFD-P100-A902 | D

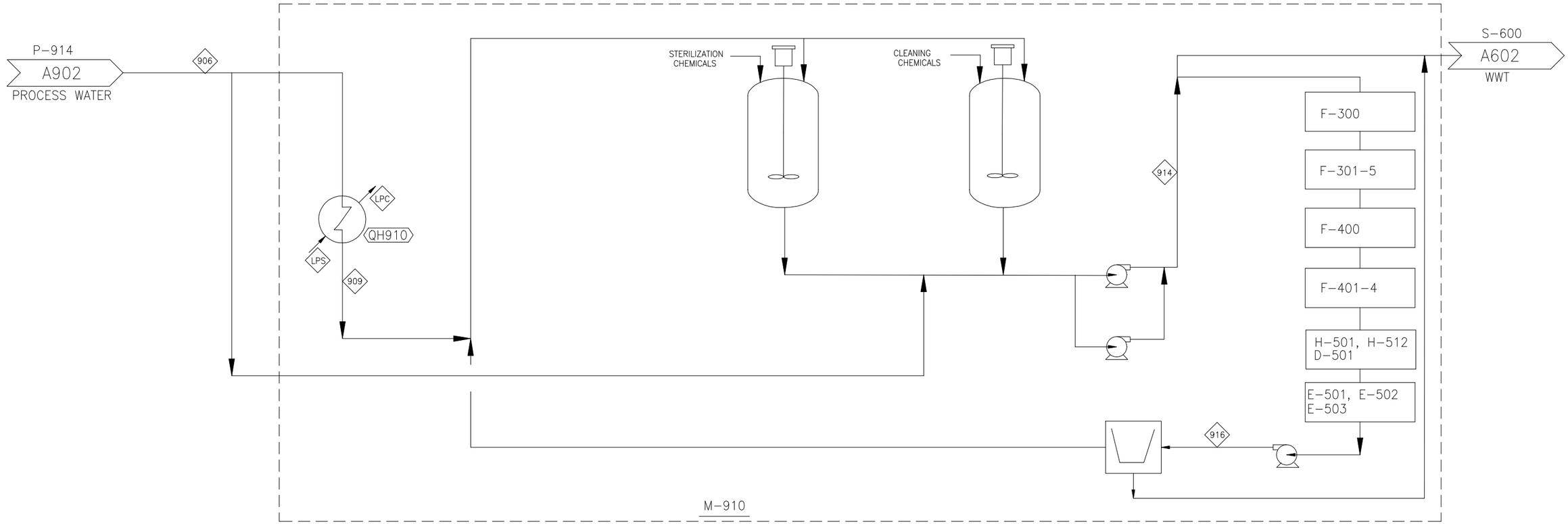

COMPONENT	UNITS	906	909	914	916
Total Flow	kg/hr	63	63	63	63
Insoluble Solids	%	0.0%	0.0%	0.0%	0.0%
Soluble Solids	%	0.0%	0.0%	0.0%	0.0%
Temperature	C	20	121	20	20
Pressure	atm	1.00	1.00	1.00	1.00
Vapor Fraction		0.00	1.00	0.00	0.00
Ethanol	kg/hr				
Water	kg/hr	63	63	63	63
Glucose (SS)	kg/hr				
Xylose (SS)	kg/hr				
Arabinose (SS)	kg/hr				
Other Sugars (SS)	kg/hr				
Cellobiose (SS)	kg/hr				
Glucose Oligomers (SS)	kg/hr				
Xylose Oligomers (SS)	kg/hr				
Other Oligomers (SS)	kg/hr				
Corn Steep Liquor (SS)	kg/hr				
(NH4)2SO4 (SS)	kg/hr				
NH4Acetate (SS)	kg/hr				
Others (Soluble Solids)	kg/hr				
Acetic Acid	kg/hr				
Sulfuric Acid	kg/hr				
Furfural	kg/hr				
HMF	kg/hr				
Carbon Dioxide	kg/hr				
Methane	kg/hr				
Oxygen	kg/hr				
Nitrogen	kg/hr				
Ammonia	kg/hr				
NH4OH	kg/hr				
Others	kg/hr				
Cellulose (IS)	kg/hr				
Xylan (IS)	kg/hr				
Arabinan (IS)	kg/hr				
Other Sugar Polymers (IS)	kg/hr				
Cellulase (IS)	kg/hr				
Biomass (IS)	kg/hr				
Zymo (IS)	kg/hr				
Lignin (IS)	kg/hr				
Gypsum (IS)	kg/hr				
Ca(OH)2 (IS)	kg/hr				
Others (Insoluble Solids)	kg/hr				
Enthalpy Flow (millions)	Kcal/hr	-0.2	-0.2	-0.2	-0.2
Average Density	g/ml	0.998	0.001	0.998	0.998

Heat Stream No.	MM kcal/hr		Work Stream No.	kW
QH910	-0.04			

Eq. No.	Equipment Name	Req.	Spare	Equipment Type	Mat Const.
M-910	CIP System	1	0	MISCELLANEOUS	CS

VER	DESCRIPTION	DATE
A	SUBCONTRACTOR UPDATE	4/98
B	BASECASE UPDATE	9/98
C	DESIGN REPORT	2/99
D	FINAL 1999 DESIGN REPORT	6/99
		LL 6/24/99

NREL
NATIONAL RENEWABLE ENERGY LABORATORY
Biotechnology Center For Fuels And Chemicals

SECTION A900
STERILE WATER & CIP/CS SYSTEMS

R9906A.xls | PFD-P100-A903 | D

REPORT DOCUMENTATION PAGE

Form Approved
OMB NO. 0704-0188

Public reporting burden for this collection of information is estimated to average 1 hour per response, including the time for reviewing instructions, searching existing data sources, gathering and maintaining the data needed, and completing and reviewing the collection of information. Send comments regarding this burden estimate or any other aspect of this collection of information, including suggestions for reducing this burden, to Washington Headquarters Services, Directorate for Information Operations and Reports, 1215 Jefferson Davis Highway, Suite 1204, Arlington, VA 22202-4302, and to the Office of Management and Budget, Paperwork Reduction Project (0704-0188), Washington, DC 20503.

1. AGENCY USE ONLY (Leave blank)	2. REPORT DATE	3. REPORT TYPE AND DATES COVERED
	July 1999	Technical Report

4. TITLE AND SUBTITLE
Lignocelluloais Biomass to Ethanol Process Design and Economics Utilizing Co-Current Dilute Acid Prehydrolysis and Enzymatic Hydrolysis Current and Futuristic Scenarios

5. FUNDING NUMBERS
BF882251

6. AUTHOR(S)
R. Wooley, M. Ruth, J. Sheehan, K. Ibsen
H. Majdeski, A. Galvez

7. PERFORMING ORGANIZATION NAME(S) AND ADDRESS(ES)
National Renewable Energy Laboratory, 1617 Cole Boulevard, Golden, CO 80401-3393
Delta-T Corporation, 460 McLaws Circle - #150, Williamsburg, VA 23185

8. PERFORMING ORGANIZATION REPORT NUMBER
NREL/TP-580-26157

9. SPONSORING/MONITORING AGENCY NAME(S) AND ADDRESS(ES)
National Renewable Energy Laboratory
1617 Cole Blvd.
Golden, CO 80401-3393

10. SPONSORING/MONITORING AGENCY REPORT NUMBER

11. SUPPLEMENTARY NOTES
NREL Technical Monitor:

12a. DISTRIBUTION/AVAILABILITY STATEMENT
National Technical Information Service
U.S. Department of Commerce
5285 Port Royal Road
Springfield, VA 22161

12b. DISTRIBUTION CODE

13. ABSTRACT *(Maximum 200 words)*

The National Renewable Energy Laboratory (NREL) has undertaken a complete review and update of the process design and economic model for the biomass-to-ethanol enzymatic based process. The process design includes the core technologies being researched by the U.S. Department of Energy (DOE): prehydrolysis, simultaneous saccharification and co-fermentation, and cellulase enzyme production. In addition, all ancillary areas—feed handling, product recovery and purification, wastewater treatment lignin burner and boiler-turbogenerator, and utilities—are included. NREL engaged Delta-T Corporation to assist in the process design evaluation, equipment costing, and overall plant integration. The process design and costing for the lignin burner and boiler turbogenerator has been reviewed by Reaction Engineering Inc. and the wastewater treatment by Merrick & Company. An overview of both reviews is included here.

The purpose of this update was to ensure that the process design and equipment costs were reasonable and consistent with good engineering practice for plants of this type using available technical data.

This work has resulted in an economic model that can be used to predict the cost of producing ethanol from cellulosic biomass using this technology if a plant were to be built in the next few years. The model was also extended using technology improvements that are expected to be developed based on the current DOE research plan. Future process designs and cost estimates are given for the years 2005, 2010, and 2015.

14. SUBJECT TERMS
Ethanol; Process Design; Economic Evaluation; Cost Estimation; Pretreatment; Fermentation; Waste Water Pretreatment; Lignin Burner Distillation; Molecular Sieve

15. NUMBER OF PAGES
128

16. PRICE CODE

17. SECURITY CLASSIFICATION OF REPORT	18. SECURITY CLASSIFICATION OF THIS PAGE	19. SECURITY CLASSIFICATION OF ABSTRACT	20. LIMITATION OF ABSTRACT