System Impact Study of the Eastern Grid of Sumba Island, Indonesia

Steady-State and Dynamic System Modeling for the Integration of One and Two 850-kW Wind Turbine Generators

R. Oswal,[1] P. Jain,[1] E. Muljadi,[2] B. Hirsch,[2] B. Castermans,[3] J. Chandra,[3] S. Raharjo,[3] and R. Hardison[3]

[1] *Innovative Wind Energy, Inc.*
[2] *National Renewable Energy Laboratory*
[3] *Winrock International, Inc.*

NREL is a national laboratory of the U.S. Department of Energy
Office of Energy Efficiency & Renewable Energy
Operated by the Alliance for Sustainable Energy, LLC

This report is available at no cost from the National Renewable Energy Laboratory (NREL) at www.nrel.gov/publications.

Technical Report
NREL/TP-5D00-65458
January 2016

Contract No. DE-AC36-08GO28308

System Impact Study of the Eastern Grid of Sumba Island, Indonesia

Steady-State and Dynamic System Modeling for the Integration of One and Two 850-kW Wind Turbine Generators

R. Oswal,[1] P. Jain,[1] E. Muljadi,[2] B. Hirsch,[2] B. Castermans,[3] J. Chandra,[3] S. Raharjo,[3] and R. Hardison[3]

[1] *Innovative Wind Energy, Inc.*
[2] *National Renewable Energy Laboratory*
[3] *Winrock International, Inc.*

Prepared under Task No. IGIN.6200

NREL is a national laboratory of the U.S. Department of Energy
Office of Energy Efficiency & Renewable Energy
Operated by the Alliance for Sustainable Energy, LLC

This report is available at no cost from the National Renewable Energy Laboratory (NREL) at www.nrel.gov/publications.

National Renewable Energy Laboratory
15013 Denver West Parkway
Golden, CO 80401
303-275-3000 • www.nrel.gov

Technical Report
NREL/TP-5D00-65458
January 2016

Contract No. DE-AC36-08GO28308

NOTICE

This report was prepared as an account of work sponsored by an agency of the United States government. Neither the United States government nor any agency thereof, nor any of their employees, makes any warranty, express or implied, or assumes any legal liability or responsibility for the accuracy, completeness, or usefulness of any information, apparatus, product, or process disclosed, or represents that its use would not infringe privately owned rights. Reference herein to any specific commercial product, process, or service by trade name, trademark, manufacturer, or otherwise does not necessarily constitute or imply its endorsement, recommendation, or favoring by the United States government or any agency thereof. The views and opinions of authors expressed herein do not necessarily state or reflect those of the United States government or any agency thereof.

This report is available at no cost from the National Renewable Energy Laboratory (NREL) at www.nrel.gov/publications.

Available electronically at SciTech Connect http:/www.osti.gov/scitech

Available for a processing fee to U.S. Department of Energy and its contractors, in paper, from:

U.S. Department of Energy
Office of Scientific and Technical Information
P.O. Box 62
Oak Ridge, TN 37831-0062
OSTI http://www.osti.gov
Phone: 865.576.8401
Fax: 865.576.5728
Email: reports@osti.gov

Available for sale to the public, in paper, from:

U.S. Department of Commerce
National Technical Information Service
5301 Shawnee Road
Alexandria, VA 22312
NTIS http://www.ntis.gov
Phone: 800.553.6847 or 703.605.6000
Fax: 703.605.6900
Email: orders@ntis.gov

Cover Photos by Dennis Schroeder: (left to right) NREL 26173, NREL 18302, NREL 19758, NREL 29642, NREL 19795.

NREL prints on paper that contains recycled content.

List of Acronyms

Hz	hertz
Km	kilometer
kV	kilovolt
kW	kilowatt
Li-ion	lithium-ion
MVA	mega-volt-ampere
MW	megawatt
MWh	megawatt-hour
NREL	National Renewable Energy Laboratory
p.u.	per unit
PF	power factor
PLN	State Electricity Company of Indonesia
SCPR	short-circuit power ratio
WTG	wind turbine generator

This report is available at no cost from the National Renewable Energy Laboratory (NREL) at www.nrel.gov/publications.

Executive Summary

The goal of this project was to study the impact of integrating one and two 850-kW wind turbine generators (WTGs) into the eastern power system network of Sumba Island, Indonesia. A model was created for the 20-kV distribution network as it existed in the first quarter of 2015, with a peak load of 5.682 MW. Detailed data were collected for each element of the network. Load flow, short-circuit, and transient analyses were performed using DIgSILENT PowerFactory 15.2.1.

The load flow analysis suggests that in the baseline (no WTGs) and with both integration options there is no overloading of generators, no overloading of conductors, and all of the bus voltages are within range.

The short-circuit analysis suggests that the short-circuit power ratio is comfortably above the minimum requirement at the Haharu Bus—the point of common coupling of the WTG. In addition, because the short-circuit power contribution of the WTGs is minimal, the ratings of the devices in the substations should not be impacted.

The transient analysis suggests that with one 850-kW WTG, the system is unstable under the following fault scenarios: a 400-kW loss of generation at the Kambajawa Bus with no reconnection, a 400-kW loss of generation at the Waingapu Bus with no reconnection, and the loss of the 850-kW WTG with no reconnection. However, the system is stable with the addition of 500 kW/4.17 kWh of storage (stability support equipment) coupled with the auto-start capability of the backup generator within 10 s after the fault.

As a result of the analysis of integrating one 850-kW WTG at the Haharu Bus in the eastern grid of Sumba Island, the following options for changes to the grid are explored:

1. Add a 500-kW/4.17-kWh storage unit[1] to the Haharu Bus along with a hybrid control system to auto-start a designated backup generator (an existing CAT32 diesel unit with a capacity of 550 kW located in Waingapu). In the high-wind scenario (which occurs with a frequency of approximately 2% duration of the wind speeds) and under a variety of disturbances—such as the loss of a WTG or the loss of a generator at the Kambajawa Bus—the following sequence of events will need to happen to maintain system stability:
    A. The storage unit provides maximum energy from the start of the disturbance for a duration of 10 s, thereby reducing the rate of the decrease in grid frequency and improving the frequency nadir of the frequency dip during the loss of generation.
    B. The controller sends an auto-start signal to CAT32 when the fault occurs.
    C. The CAT32 diesel unit starts within 10 s.
    D. The storage unit continues to provide power for 30 s and then disconnects.
    E. After 30 s, if there is a shortfall in power, other generators in the system increase production by tapping into headroom to deliver the additional power required.

[1] The requirement is for 500 kW/4.17 kWh. The exact sizing and specifications of the storage unit is not within the scope of this project; however, it must be noted that commercially available storage units of 500 kW will have energy content much larger than 4.17 kWh.

This report is available at no cost from the National Renewable Energy Laboratory (NREL) at www.nrel.gov/publications.

2. If no storage is used, then grid management becomes a challenge. The following strategy could address this challenge, but it would cause the diesel generator sets to run at lower efficiency:
    A. Run the diesel generators with sufficient headroom to provide close to 850 kW of power in case of the loss of the WTG during high wind. This would be challenging during low demand, because it would require running the diesel generator sets at less than 90% of full rating; this could provide the headroom, but it would sacrifice efficiency. The current practice is to run the diesel generator sets at 100% full rating (no headroom).

Thus, adding one 850-kW WTG to the eastern power system network of Sumba along with a 500-kW storage unit, hybrid power plant controller, 550-kW backup diesel generator set with 10-s cold-start time, and high-speed communications is a solution that will improve the reliability of the energy supply, enhance the stability of the system, and reduce greenhouse gas emissions.

The transient analysis suggests that with two 850-kW WTGs located in the same area, the system is unstable under the following fault scenarios: a loss of generation at the Kambajawa Bus with no reconnection and the loss of two WTGs with no reconnection. With the addition of the following, the system is stable: (1) 1,500 kW/25 kWh of storage,[2] (2) one 550-kW backup diesel generator with 10-s cold-start time, (3) additional backup generators with 60-s cold-start times, (4) a hybrid controller to manage all of the generation units, and (5) a high-speed communications network. Most commercial lithium-ion storage systems and some flywheel storage systems contain energy for 60 s of discharge at rated power; therefore, the combination of adding (1)–(5) is appropriate to improve the reliability of the energy supply, enhance the stability of the system, and reduce greenhouse gas emissions.

The trip report for 2014, provided by the State Electricity Company of Indonesia (PLN), indicates that the number of blackouts and trips is high: approximately one per day. Preliminary analysis suggests that this is because of the following reasons: (1) the faults are not cleared within the specified setting time of the circuit breakers, (2) the generators are dispatched with low headroom (low spinning reserves), (3) the lack of vegetation management causes overhang on transmission lines, and (4) the diesel generators are old. Improvements to (1)–(4) and the introduction of storage will reduce the number of blackouts and trips and thereby improve the reliability of the system.

To reach the longer-term goal of 100% renewable energy in Sumba Island, this report analyzes one path: variable sources (wind/solar) + energy storage (with minimal energy content, in the range from 30 s to a few minutes) + diesel generators with short cold-start times (10–20 s) + a hybrid controller to manage all the generation assets. If implemented, the 850-kW wind project will be a pilot for this path. Note, however, that there are other paths that have not been explored, such as no diesel. As the wind project pilot is scaled up, distributing energy storage to be located near load centers should be considered so that the colocated wind and storage units do not becomes a single point of failure; locating them separately would increase the resiliency of the

[2] The requirement is for 1,500 kW/25 kWh. The exact sizing and specifications of the storage unit is not within the scope of this project; however, it must be noted that commercially available storage units of 1,500 kW will have energy content much larger than 25 kWh.

This report is available at no cost from the National Renewable Energy Laboratory (NREL) at www.nrel.gov/publications.

network. Similarly, to integrate two WTGs, the second WTG should be placed in a different location than the first, and one with high wind resources, also to avoid a single point of failure and thereby further increase the resiliency of the network.

This report is available at no cost from the National Renewable Energy Laboratory (NREL) at www.nrel.gov/publications.

Table of Contents

1 Background ... 1
2 Steady-State Analysis ... 3
2.1 The Process ... 3
2.2 Power Flow Analysis ... 3
2.2.1 Baseline Power Flow ... 5
2.2.2 Power Flow with Wind Turbine Generator Installed ... 10
2.2.3 Results of Power Flow with Wind Turbine Generator Installed ... 18
2.3 Short-Circuit Analysis ... 18
2.3.1 Short-Circuit Fault at the Point of Common Coupling of the Wind Power Plant (Before the Wind Turbine Generator Was Installed) ... 18
2.3.2 Short-Circuit Fault at the Point of Common Coupling of the Wind Power Plant (Before and After the Wind Turbine Generator Was Installed) ... 22
2.4 Guidelines to Identify and Resolve Unacceptable Differences ... 22
3 Dynamic System Analyses ... 24
3.1 The Process ... 24
3.2 Dynamic Data of Grid Elements ... 24
3.2.1 Transient Faults and Power System Conditions ... 24
3.2.2 Loss of Partial Load ... 25
3.2.3 Loss of Partial Generation ... 25
3.3 Voltage and Frequency Limits in Study ... 25
3.4 Scenarios for the Integration of One 850-kW Wind Turbine Generator ... 26
3.5 Analysis of the System with the Addition of Storage ... 35
3.6 Scenarios for the Integration of Two 850-kW Wind Turbine Generators ... 42
4 Conclusions ... 47
5 References ... 48
Appendix A: Load Flow, Short-Circuit, and Dynamic Model Data ... 49
Appendix B: Steady-State and Short-Circuit Model in Power Factory—Input Data ... 54
Appendix C: Load Profile Results ... 75
Appendix D: List of Dynamic Models ... 126
Appendix E: Steady-State and Dynamic System Modeling for the Integration of One 850-kW Wind Turbine Generator ... 135
Appendix F: Report 1—Dynamic System Impact Study by ABB ... 287
Appendix G: Steady-State and Dynamic System Modeling for the Integration of Two 850-kW Wind Turbine Generators ... 319
Appendix H: Indonesian Translation ... 380

This report is available at no cost from the National Renewable Energy Laboratory (NREL) at www.nrel.gov/publications.

List of Figures

Figure 1. Projected peak load growth in Sumba Island. *Image from Hivos International (2011)* 1
Figure 2. Annual average wind resources in Sumba Island. *Image from Hirsch et al. (2015)* 2
Figure 3. Power flow display: high load without WTG(s). MTU 1 = slack bus 8
Figure 4. Power flow display: low load without WTG(s). MAN 1 = slack bus 9
Figure 5. Power flow display: high load with WTG. MTU 1 = slack bus 11
Figure 6. Power flow display: low load with WTG. DOOSAN 5 = slack bus 12
Figure 7. Power flow display: high load, with 2 WTGs. MAN 1 = slack bus 13
Figure 8. Power flow display: low load, with 2 WTGs. DOOSAN 3 = slack bus 14
Figure 9. Short-circuit analysis of the three-phase fault at the point of common coupling (high load) 20
Figure 10. Short-circuit analysis of the three-phase fault at the point of common coupling (low load)..... 21
Figure 11. Power flow display: high load with WTG and PowerStore. MTU1 = slack bus..... 38
Figure 12. Power flow display: low load with WTG and PowerStore. DOOSAN 5 = slack bus 39

List of Tables

Table 1. Bus/Substation Data for Sumba Island 4
Table 2. List of Generators at Haharu Bus #1 4
Table 3. List of Generators at Kambajawa Bus #2 4
Table 4. List of Generators at Waingapu Bus #3 5
Table 5. Power Demand and Power Factor of Loads at Three Substations 5
Table 6. Slack Buses for the Scenarios 6
Table 7. Status of Each Generator and Its Power Factor for One and Two WTGs 7
Table 8. Comparison of Different Load Flow Scenarios 15
Table 9. Comparison of Different Short-Circuit Scenarios When Shorted at the Point of Common Coupling 18
Table 10. Comparison of Short-Circuit Power Contribution by WTG(s) 22
Table 11. Guidelines to Identify Acceptable Differences for 20kV network 22
Table 12. Guidelines to Resolve Unacceptable Differences 23
Table 13. Load Loss Scenarios 25
Table 14. Scenarios and Observations for the Dynamic System Impact Analysis of the Integration of One WTG 26
Table 15. Scenarios and Observations for the Dynamic System Impact Analysis with Storage (ABB PowerStore) 40
Table 16. Scenarios and Observations for Dynamic System Impact Analysis for the Integration of Two WTGs 42

This report is available at no cost from the National Renewable Energy Laboratory (NREL) at www.nrel.gov/publications.

1 Background

The goal of this project was to study the impact of integrating one or two 850-kW Vestas Type 3 (doubly-fed induction generators) WTGs into the eastern power system network of Sumba Island, Indonesia. Sumba Island was chosen as the iconic island for a renewable energy initiative based on a study performed by Hivos International in collaboration with Winrock International, Inc. Sumba was chosen because of the following considerations:

- Residents have low access to electricity. (The electrification ratio was 24.5% in 2010.)
- Until now, Sumba has been heavily dependent on its diesel power plants. (Eighty-five percent of the electricity is from fuel oil/diesel.)
- Fuel oil is sent from other regions in Indonesia, which incurs high transportation costs.
- Sumba is rich in renewable energy resources, including water, bioenergy, wind, and solar/photovoltaic.
- Approximately 20% of Sumba's population is considered low income (poor).

The predicted growth of Sumba's energy consumption is illustrated in Figure 1, shown with different accelerations. At the minimum, it is predicted that the peak load will reach approximately 13 MW by 2025, a growth of approximately 300%. At the maximum, the peak load is predicted to reach approximately 20 MW by 2025, a growth of approximately 500%.

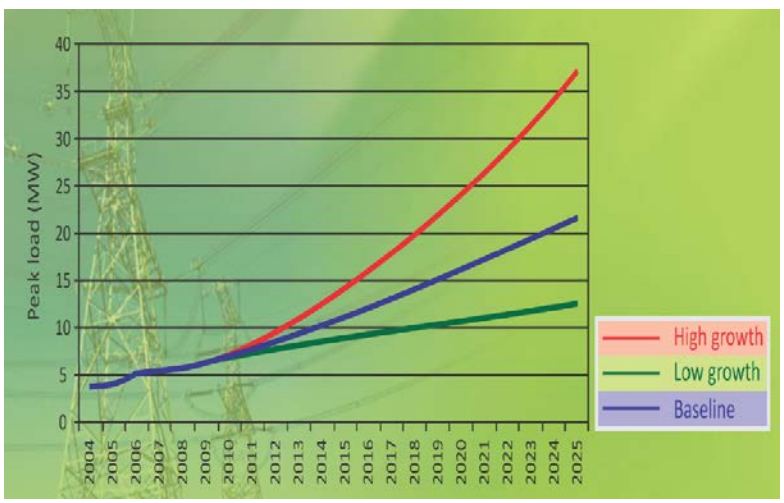

Figure 1. Projected peak load growth in Sumba Island. ***Image from Hivos International (2011)***

A map of the wind resources is given in Figure 2. As shown, the wind resources are generally very good throughout Sumba Island, reaching up to 7.5 m/s in some places not far from the load centers.

This report is available at no cost from the National Renewable Energy Laboratory (NREL) at www.nrel.gov/publications.

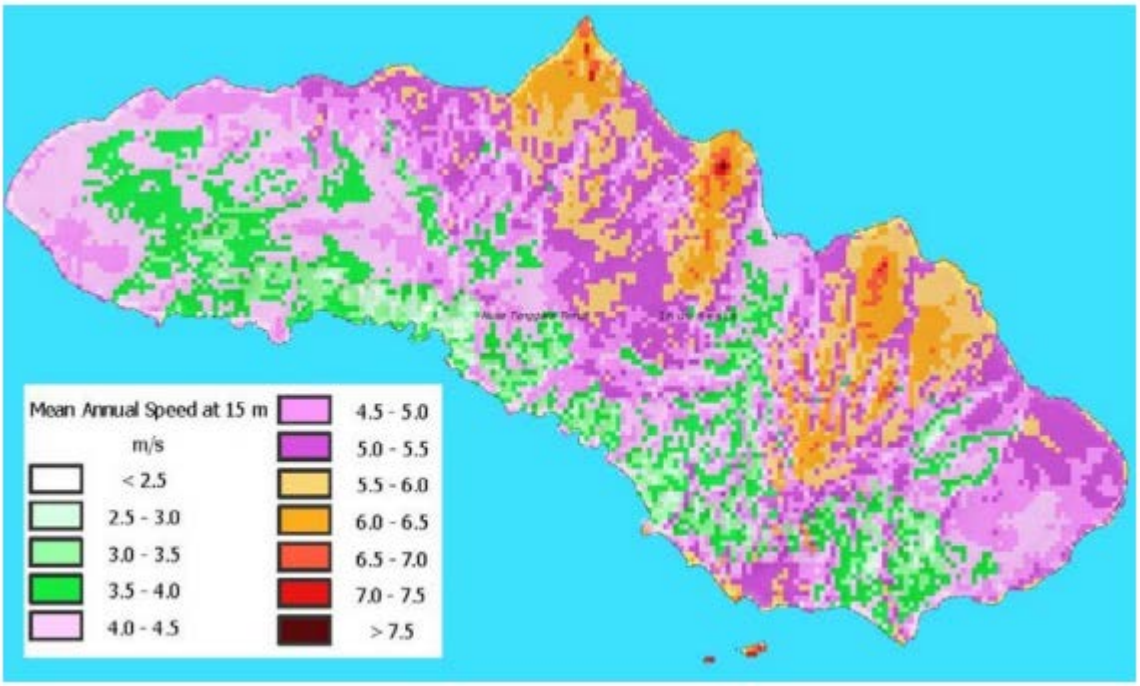

Figure 2. Annual average wind resources in Sumba Island. ***Image from Hirsch et al. (2015)***

This project is a collaboration among the National Renewable Energy Laboratory (NREL), Winrock International, Inc., and the State Electricity Company of Indonesia (PLN). The North American Electric Reliability Corporation's standard on Steady-State and Dynamic System Model Validation mandates that planning coordinators develop and implement a documented data validation process to validate their steady-state and dynamic system models. Toward that end, this group developed such a process, which is described herein, to study the eastern grid of Sumba Island. Note that the validation has not been performed.

This report is available at no cost from the National Renewable Energy Laboratory (NREL) at www.nrel.gov/publications.

2 Steady-State Analysis

The steady-state analysis was performed to analyze the steady-state conditions of the power system network, including the bus voltages and the power flows through the branches and transformers, by considering different scenarios when the power system operates under stresses.

2.1 The Process

The process used to analyze the steady-state system model was based on the North American Electric Reliability Corporation's Procedures for Validation of Powerflow and Dynamics Cases. Some changes were made to the procedures based on regional regulation (by PLN) and based on engineering judgment. The following data were obtained from PLN in eastern Sumba. The complete data are shown in Appendix A. The process was as follows:

1. Obtain data from PLN for the following:
    - A. Transmission lines
        - i. Status
    - B. Transformers
        - i. Status
        - ii. Load tap changer position
        - iii. Type (Transformers that had load tap changers were changed to Type 1 to deactivate the load tap changers.)
    - C. Loads
        - i. Real power
        - ii. Reactive power
    - D. Generators
        - i. Real power
        - ii. Reactive power
2. Model all diesel generator sets and wind generation that is connected via 20-kV feeders as generators at the appropriate buses.

2.2 Power Flow Analysis

The power system network, load data, and power plant data were needed to analyze the steady-state power system model. Appendix B contains the input data for each scenario, and Appendix C contains the detailed results of power flow analysis for each scenario.

This report is available at no cost from the National Renewable Energy Laboratory (NREL) at www.nrel.gov/publications.

Table 1. Bus/Substation Data for Sumba Island

No.	Substation Name	Voltage Level (kV)	Breaker Rating (kA)	Area/Zone	District Name
1	Haharu	20	16	Hambapraing	Haharu
2	Kambajawa	20	16	East Sumba	Kambajawa
3	Waingapu	20	16	Waingapu	Waingapu

Note: MHaharu is the bus between Haharu and Kambajawa. It was introduced because the conductor type changes—17 Km is one type, and 8 Km is another. In the diagrams in Figure 4, this bus is labeled "Single busbar(3)/K-H2," and it is located right beneath the Haharu Bus.

Table 2. List of Generators at Haharu Bus #1

No.	Generator Name	Rated Voltage (kV)	MVA Rating
1	WTG1	0.69	0.85
2	WTG2	0.69	0.85

Note: The second generator is not used in the case of integrating one 850-kW WTG.

Table 3. List of Generators at Kambajawa Bus #2

SNo.	Generator Name	Rated Voltage (kV)	MVA Rating
1	Volvo	0.4	0.22
2	MTU1	0.4	0.65
3	MAN1	0.4	0.43
4	MTU2	0.4	0.43
5	MTU4	0.4	0.43
6	MAN2	0.4	0.32
7	DOOSAN1	0.4	0.42
8	DOOSAN2	0.4	0.42
9	DOOSAN3	0.4	0.42
10	DOOSAN4	0.4	0.42
11	DOOSAN5	0.4	0.42
Total:			4.58

This report is available at no cost from the National Renewable Energy Laboratory (NREL) at www.nrel.gov/publications.

Table 4. List of Generators at Waingapu Bus #3

SNo.	Generator Name	Rated Voltage (kV)	MVA Rating
1	CAT	0.4	0.55
2	YANMAR	6.3	0.22
3	DEUTZ1	0.4	0.18
4	DEUTZ2	0.4	0.18
5	SWD1	6.3	0.22
6	SWD2	6.3	0.22
7	SWD3	6.3	0.22
Total			1.79

2.2.1 Baseline Power Flow

The baseline power flow analyzes the power system during light load and heavy load conditions before a WTG is installed.

According to the information received, the total maximum load in the system is 5.682 MW around 6:00 p.m., and the total minimum load of the system is 2.751 MW during daytime. The actual loads on each bus during the maximum and minimum load conditions are given in Table 5. Information about the load power factor (PF) under both conditions is also shown.

Table 5. Power Demand and Power Factor of Loads at Three Substations

Bus No.	Name of Substation	Voltage Level (kV)	Max. Load (MW), Peak Load	Power Factor, Peak Load	Min. Load (MW), Off-Peak Load	PF, Off-Peak Load
1	Haharu	20	0.104	0.85	0.051	0.85
2	Kambajawa	20	3.494	0.9	1.691	0.95
3	Waingapu	20	2.084	0.9	1.0086	0.95
	Total		5.682		2.751	

According to the information collected from PLN in Sumba, during off-peak hours only the generators at the Kambajawa Bus operate. During peak load hours, specific generators at the Waingapu Bus are turned on depending on the extra generation needed. This decision is based on the fuel efficiency of the generators. The first priority is given to CAT C32, followed by Yanmar, DEUTZ, and SWD.

To model this type of dispatch, the slack bus definition shown in Table 6 is used for the different scenarios.

This report is available at no cost from the National Renewable Energy Laboratory (NREL) at www.nrel.gov/publications.

Table 6. Slack Buses for the Scenarios

Scenario	Slack Bus
No Wind High Load	MTU 1
No Wind Low Load	MAN 1
High Wind (1)[a] High Load	MTU 1
High Wind (1) Low Load	DOOSAN 5
High Wind (2) High Load	MAN 1
High Wind (2) Low Load	DOOSAN 3

[a] The number in the parentheses indicates the number of WTGs.

Data collected from PLN in Sumba suggests that all the generators run at PF = 0.8. Modeling this power factor resulted in a large generation of reactive power compared to demand, thereby causing a large absorption of reactive power at the slack bus. To rectify this situation, a few generators are made to run at PF = 1 to ensure that there is minimal absorption of reactive power at the slack bus. Table 7 lists the generators that are turned on, off, and running at PF = 1 in the four scenarios. The results of the baseline model indicate that the Kambajawa generators are not overloaded, and all the voltages are within the specified band.

This report is available at no cost from the National Renewable Energy Laboratory (NREL) at www.nrel.gov/publications.

Table 7. Status of Each Generator and Its Power Factor for One and Two WTGs

Generator Name	Derated	No Wind High Load		No Wind Low Load		High Wind (1) High Load		High Wind (1) Low Load		High Wind (2) High Load		High Wind (2) Low Load	
		Status	PF	Status	PF	Status	PF	Status	PF	Status	PF	Status	PF
MTU2	430	ON	0.8	ON	0.8	ON	1	OFF	0	ON	0.8	OFF	0
DOOSAN1	420	ON	1	ON	1	ON	1	ON	1	ON	0.8	ON	1
DOOSAN2	420	ON	1	ON	1	ON	0.8	ON	0.8	ON	0.8	ON	0.8
DOOSAN3	420	ON	0.8	ON	1	ON	0.8	ON	0.8	ON	0.8	ON	0.8
DOOSAN4	420	ON	0.8	ON	0.8	ON	0.8	ON	0.8	ON	0.8	OFF	0
DOOSAN5	420	ON	1	ON	0.8	ON	0.8	ON	0.8	ON	0.8	OFF	0
VOLVO	220	ON	0.8	OFF	0	ON	0.8	OFF	0	ON	0.8	OFF	0
MAN1	430	ON	0.8	ON	0.8	ON	0.8	OFF	0	ON	0.8	OFF	0
MTU1	650	ON	0.8	OFF	0	ON	0.8	OFF	0	ON	0.8	OFF	0
MTU4	430	ON	0.8	OFF	0	ON	0.8	OFF	0	ON	0.8	OFF	0
CAT	550	ON	0.8	OFF	0	ON	0.8	OFF	0	OFF	0	OFF	0
YANMAR	220	ON	0.8	OFF	0	ON	1	OFF	0	ON	0.8	OFF	0
MAN2	320	ON	0.8	OFF	0	OFF	0	OFF	0	OFF	0	OFF	0
DEUTZ-1	180	ON	1	OFF	0	OFF	0	OFF	0	OFF	0	OFF	0
DEUTZ-2	180	ON	0.8	OFF	0	ON	1	OFF	0	OFF	0	OFF	0
SWD-1	220	ON	1	OFF	0	OFF	0	OFF	0	OFF	0	OFF	0
SWD-2	220	ON	0.8	OFF	0	OFF	0	OFF	0	OFF	0	OFF	0
SWD-3	220	OFF	0	OFF	0	OFF	0	OFF	0	OFF	0	OFF	0
WTG	850	OFF	0	OFF	0	ON	1	ON	1	ON	1	ON	1

This report is available at no cost from the National Renewable Energy Laboratory (NREL) at www.nrel.gov/publications.

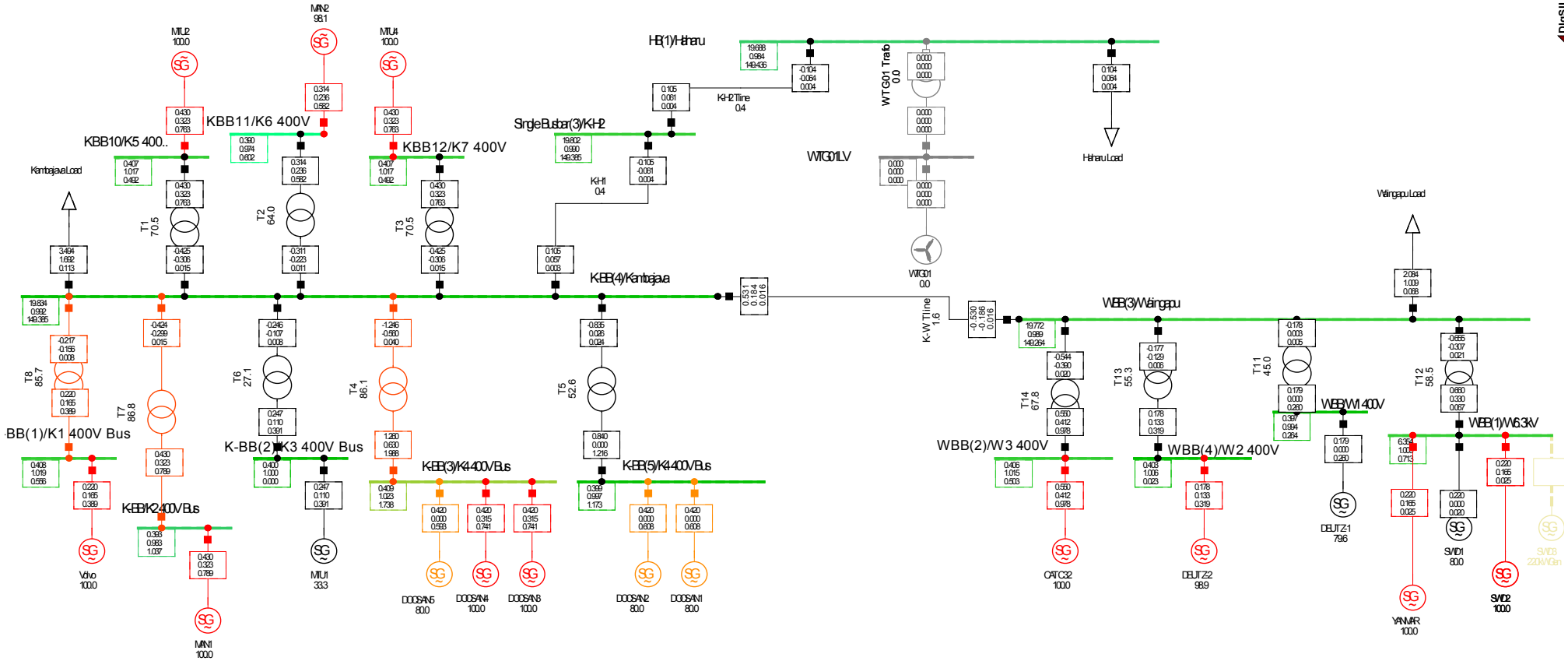

Legends:

Nodes	Branches
Line-Line Voltage, Magnitude [kV]	Active Power [MW]
Voltage, Magnitude [p.u.]	Reactive Power [Mvar]
Voltage, Angle [deg]	Current, Magnitude [kA]

Figure 3. Power flow display: high load without WTG(s). MTU 1 = slack bus

This report is available at no cost from the National Renewable Energy Laboratory (NREL) at www.nrel.gov/publications.

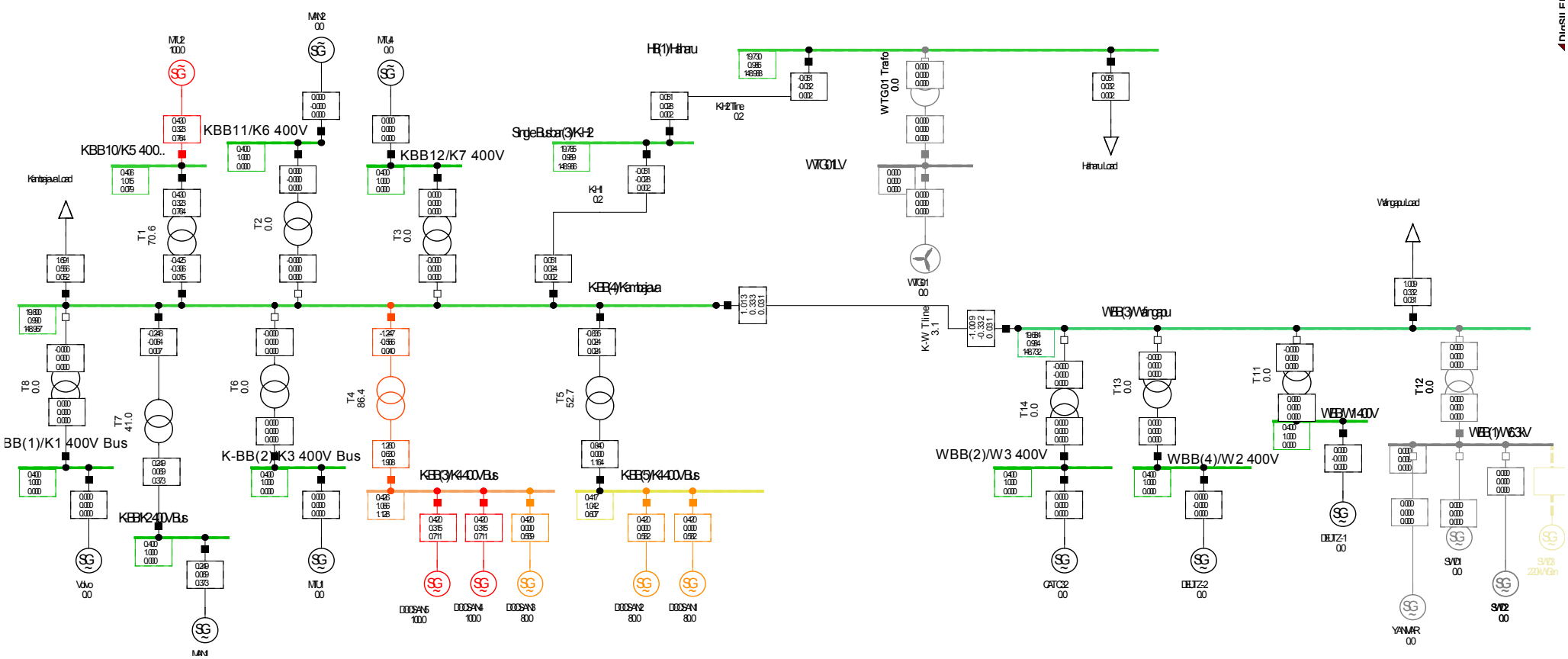

Figure 4. Power flow display: low load without WTG(s). MAN 1 = slack bus

This report is available at no cost from the National Renewable Energy Laboratory (NREL) at www.nrel.gov/publications.

2.2.2 Power Flow with Wind Turbine Generator Installed

The system was also analyzed under the same two baseline scenarios with the two options related to integrating one and two WTGs. The WTGs have capacities of 850 kW and output voltages of 0.69 kV. The load flow analysis was performed under the same load conditions as the baseline and for the same scenarios. The results are presented in Table 8.

This report is available at no cost from the National Renewable Energy Laboratory (NREL) at www.nrel.gov/publications.

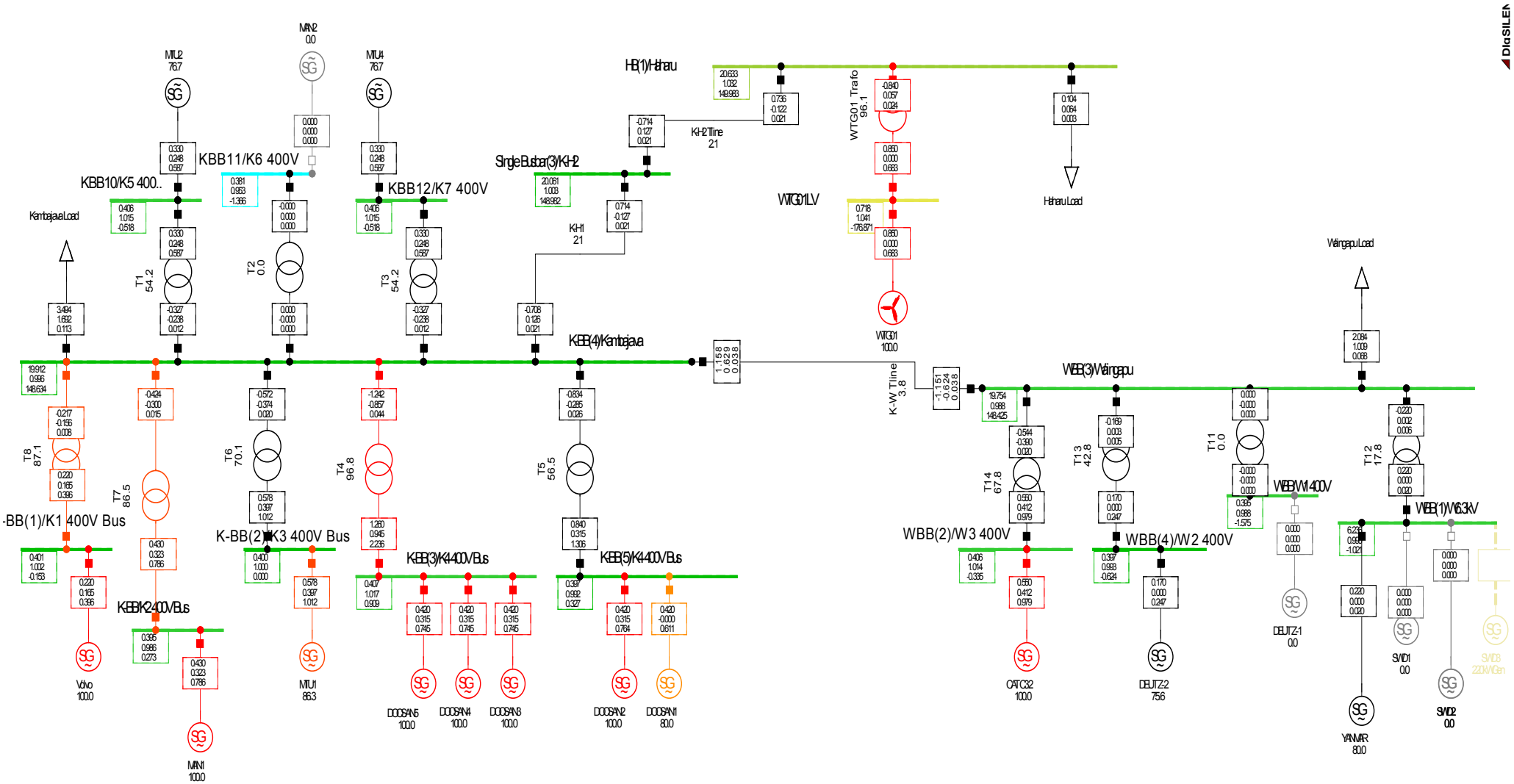

Figure 5. Power flow display: high load with WTG. MTU 1 = slack bus

This report is available at no cost from the National Renewable Energy Laboratory (NREL) at www.nrel.gov/publications.

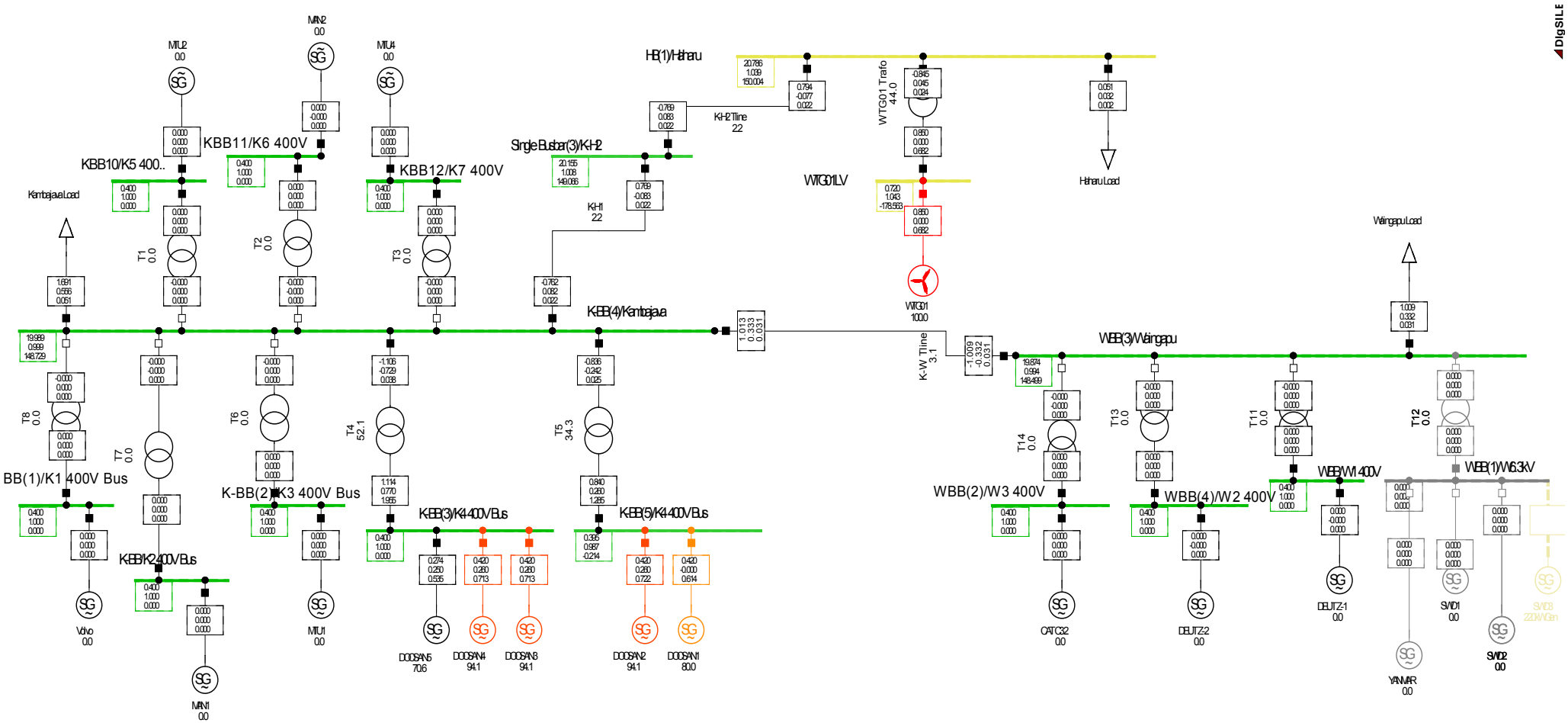

Figure 6. Power flow display: low load with WTG. DOOSAN 5 = slack bus

This report is available at no cost from the National Renewable Energy Laboratory (NREL) at www.nrel.gov/publications.

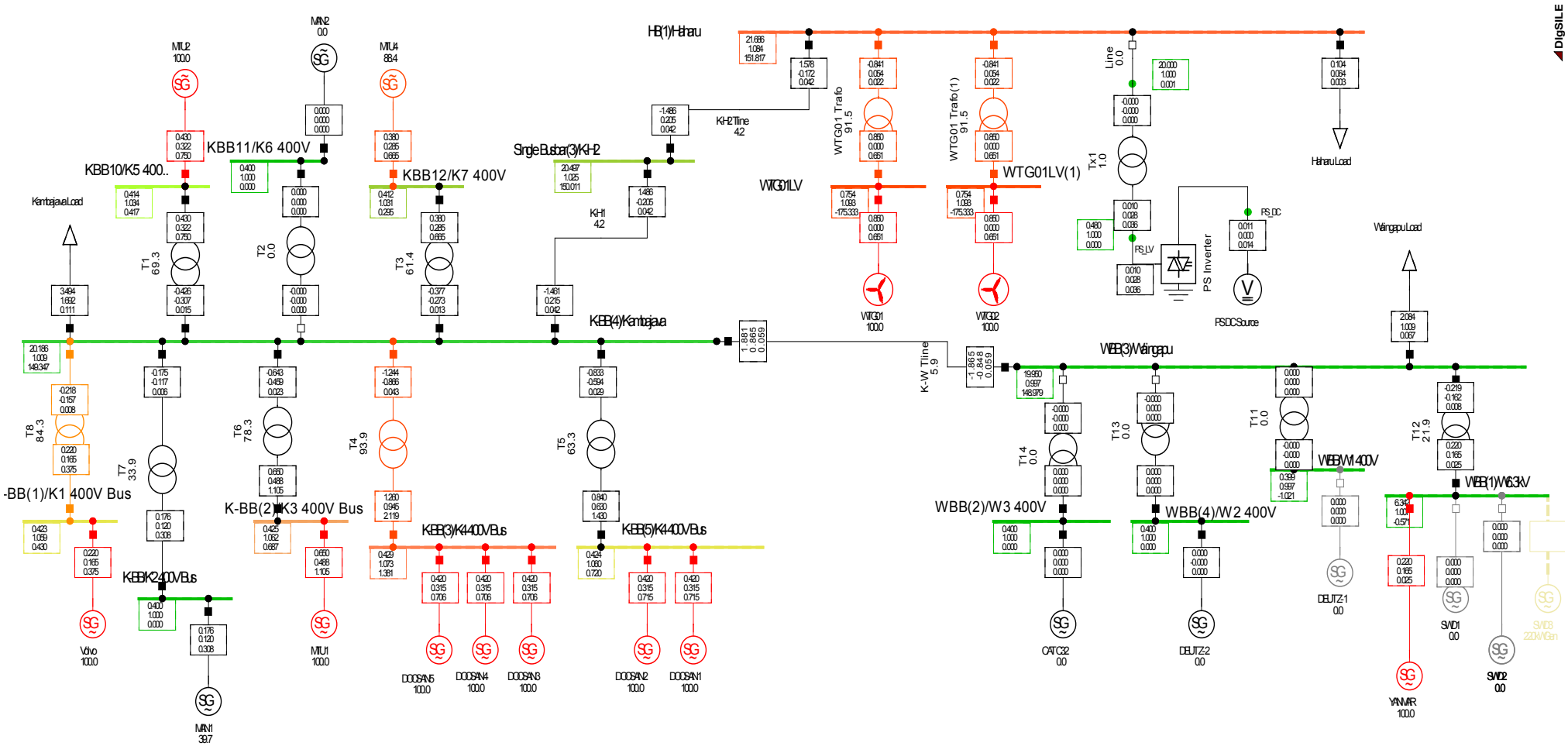

Figure 7. Power flow display: high load, with 2 WTGs. MAN 1 = slack bus

This report is available at no cost from the National Renewable Energy Laboratory (NREL) at www.nrel.gov/publications.

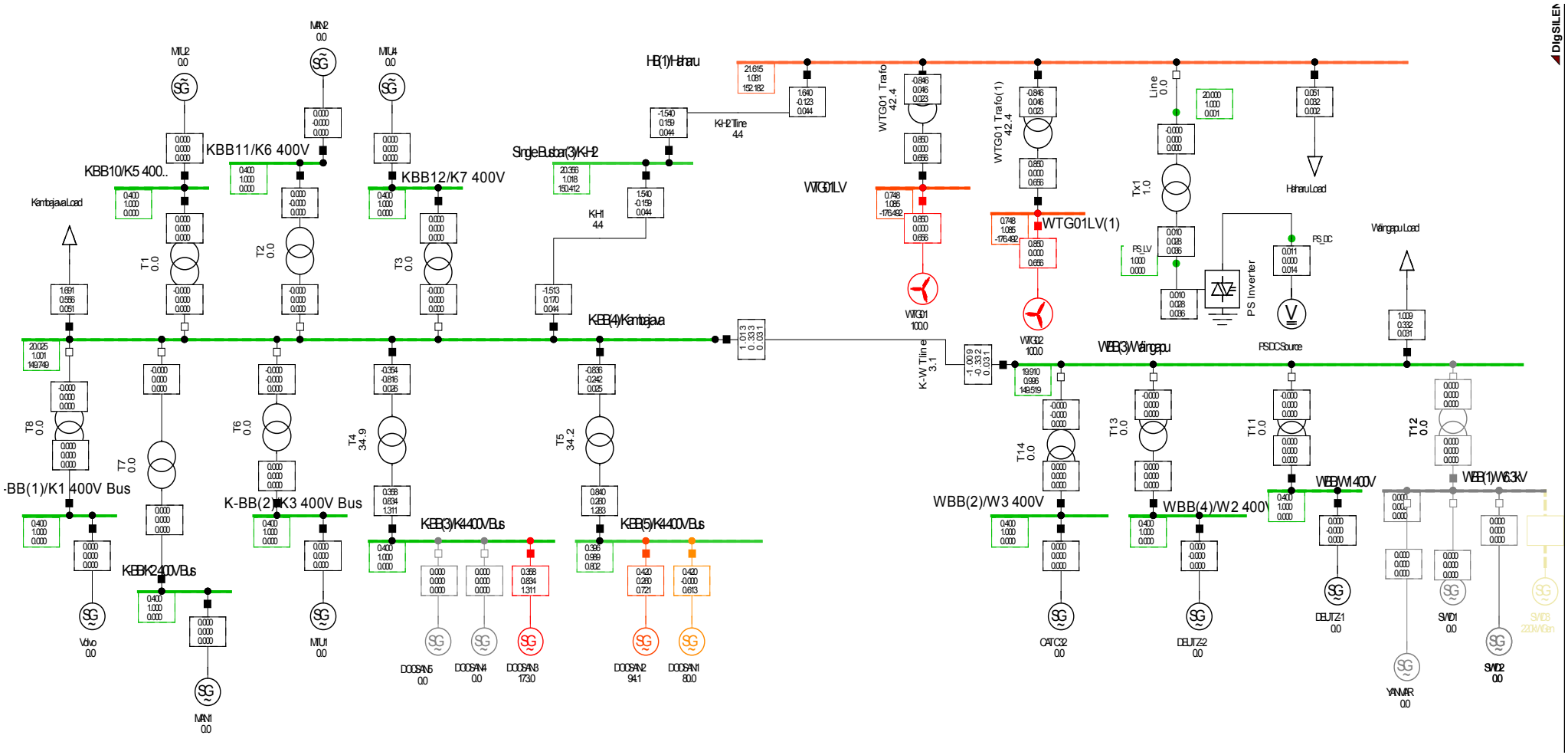

Figure 8. Power flow display: low load, with 2 WTGs. DOOSAN 3 = slack bus

This report is available at no cost from the National Renewable Energy Laboratory (NREL) at www.nrel.gov/publications.

Table 8. Comparison of Different Load Flow Scenarios

	High Load Scenario			Low Load Scenario		
	Without WTG(s)	**With 1 WTG**	**With 2 WTGs**	**Without WTG(s)**	**With 1 WTG**	**With 2 WTGs**
INPUT						
Load, PF at Kambajawa	3.494 MW, 0.9	3.494 MW, 0.9	3.494 MW, 0.9	1.691 MW, 0.95	1.691 MW, 0.95	1.691 MW, 0.95
Load, PF at Waingapu	2.084 MW, 0.9	2.084 MW, 0.9	2.084 MW, 0.9	1.009 MW, 0.95	1.009 MW, 0.95	1.009 MW, 0.95
Load, PF at Haharu	0.104 MW, 0.85	0.104 MW, 0.85	0.104 MW, 0.85	0.051 MW, 0.85	0.051 MW, 0.85	0.051 MW, 0.85
OUTPUT						
Real Power Generated by WTG(s)	0	0.85 MW	1.7 MW	0	0.85 MW	1.7 MW
Reactive Power Generated by WTG(s)	0	0 MVAR	0 MVAR	0	0.085 MVAR	0 MVAR
Real Power Generated by Kambajawa Generators	4.171 MW	3.988 MW	3.956 MW	2.779 MW	1.954 MW	1.198 MW
Reactive Power Generated by Kambajawa Generators	2.108 MVAR	2.64 MVAR	2.955 MVAR	1.022 MVAR	1.031 MVAR	1.095 MVAR
Real Power Generated by Waingapu Generators	1.567 MW	0.94 MW	0.22 MW	0	0	0

This report is available at no cost from the National Renewable Energy Laboratory (NREL) at www.nrel.gov/publications.

	High Load Scenario			Low Load Scenario		
	Without WTG(s)	**With 1 WTG**	**With 2 WTGs**	**Without WTG(s)**	**With 1 WTG**	**With 2 WTGs**
Reactive Power Generated by Waingapu Generators	0.876 MVAR	0.412 MVAR	0.165 MVAR	0	0	0
PU Voltage at Haharu (20 kV)	0.984	1.032	1.084	0.986	1.04	1.081
PU Voltage at MHaharu (20 kV)	0.99	1.003	1.025	0.989	1.008	1.018
PU Voltage at Kambajawa (20 kV)	0.992	0.996	1.009	0.99	0.999	1.001
PU Voltage at Waingapu (20 kV)	0.989	0.988	0.997	0.984	0.994	0.996
Real Power Consumed by Line between Kambajawa and MHaharu	0 MW	0.006 MW	0.025 MW	0 MW	0.007 MW	0.027 MW
Reactive Power Consumed by Line between Kambajawa and MHaharu	0.004 MVAR	0.001 MVAR	0.01 MVAR	0.004 MVAR	0.001 MVAR	0.011 MVAR
Real Power Consumed by Line between MHaharu and Haharu	0.001 MW	0.022 MW	0.092 MW	0 MW	0.025 MW	0.1 MW
Reactive Power Consumed by Line between MHaharu and Haharu	0.003 MVAR	0.005 MVAR	0.033 MVAR	0.004 MVAR	0.006 MVAR	0.036 MVAR

This report is available at no cost from the National Renewable Energy Laboratory (NREL) at www.nrel.gov/publications.

	High Load Scenario			Low Load Scenario		
	Without WTG(s)	**With 1 WTG**	**With 2 WTGs**	**Without WTG(s)**	**With 1 WTG**	**With 2 WTGs**
Real Power Consumed by Line between Kambajawa and Waingapu	0.001 MW	0.007 MW	0.016 MW	0.004 MW	0.004 MW	0.004 MW
Reactive Power Consumed by Line between Kambajawa and Waingapu	0.002 MVAR	0.005 MVAR	0.017 MVAR	0.001 MVAR	0.001 MVAR	0.001 MVAR
Haharu-Kambajawa Line Loading in kA (3.18 MVA)*	0.004	0.021	0.042	0.002	0.022	0.044
Kambajawa-Waingapu Line Loading in kA (7.4 MVA)*	0.016	0.05	0.059	0.031	0.031	0.031

This report is available at no cost from the National Renewable Energy Laboratory (NREL) at www.nrel.gov/publications.

2.2.3 Results of Power Flow with Wind Turbine Generator Installed

The results indicate the following:

- The voltages at all buses are within the limits of the grid code.
- The loads on the transmission lines are within the thermal limits of the conductor.

From a load flow perspective, installing one or two 850-kW WTGs will not have any detrimental impact on the grid.

2.3 Short-Circuit Analysis

Two types of short-circuit analyses were performed:

- Computation of the short-circuit power ratio to determine the strength of the grid at the point of common coupling. See Section 2.3.1.
- Computation of the short-circuit contribution of the WTG(s). See Section 2.3.2.

2.3.1 Short-Circuit Fault at the Point of Common Coupling of the Wind Power Plant (Before the Wind Turbine Generator Was Installed)

In the as-is scenario, the short-circuit power at the Haharu Bus (the point of common coupling of the WTG) was computed.

Table 9. Comparison of Different Short-Circuit Scenarios When Shorted at the Point of Common Coupling

	Without WTG(s)	
	Three-Phase Fault During High Load	**Three-Phase Fault During Low Load**
INPUT PARAMETERS		
Generation at Kambajawa	4.171 MW	2.779 MW
Generation at Waingapu	1.567 MW	0 MW
OUTPUT		
Short-Circuit Power at Haharu Bus	14.8 MVA	12.3 MVA
Short-Circuit Power Ratio at Haharu Bus (for 0.85-MW WTG)	17.41	14.47
Short-Circuit Power Ratio at Haharu Bus (for two 0.85-MW WTG)	8.71	7.24
Fault Contribution from Kambajawa Generators	11.3 MVA	12.3 MVA
Fault Contribution from Waingapu Generator Set	3.5 MVA	0 MVA

This report is available at no cost from the National Renewable Energy Laboratory (NREL) at www.nrel.gov/publications.

The terminology used in this section is explained as follows.

- The *short-circuit power* is actually the short-circuit apparent power output of the generator with the unit MVA. This is an indication that during a short circuit, very low "real power" is generated, and the "apparent power" is mostly consumed by the "reactive power" developed by the short-circuit current in the generator, transformer, and line reactances (Xs).
- The *short-circuit power ratio (SCPR)* is expressed per unit. The SCPR is 17.41 during high load and 14.47 during low load for one WTG and half those values for those WTGs. This is well above the SCPR requirement for connecting a wind turbine. In most grid codes, the SCPR requirement is 5 or higher to avoid large fluctuations in voltage at the point of common coupling when the wind power plant is off, connected during low wind speeds, and connected during high wind speeds.

This report is available at no cost from the National Renewable Energy Laboratory (NREL) at www.nrel.gov/publications.

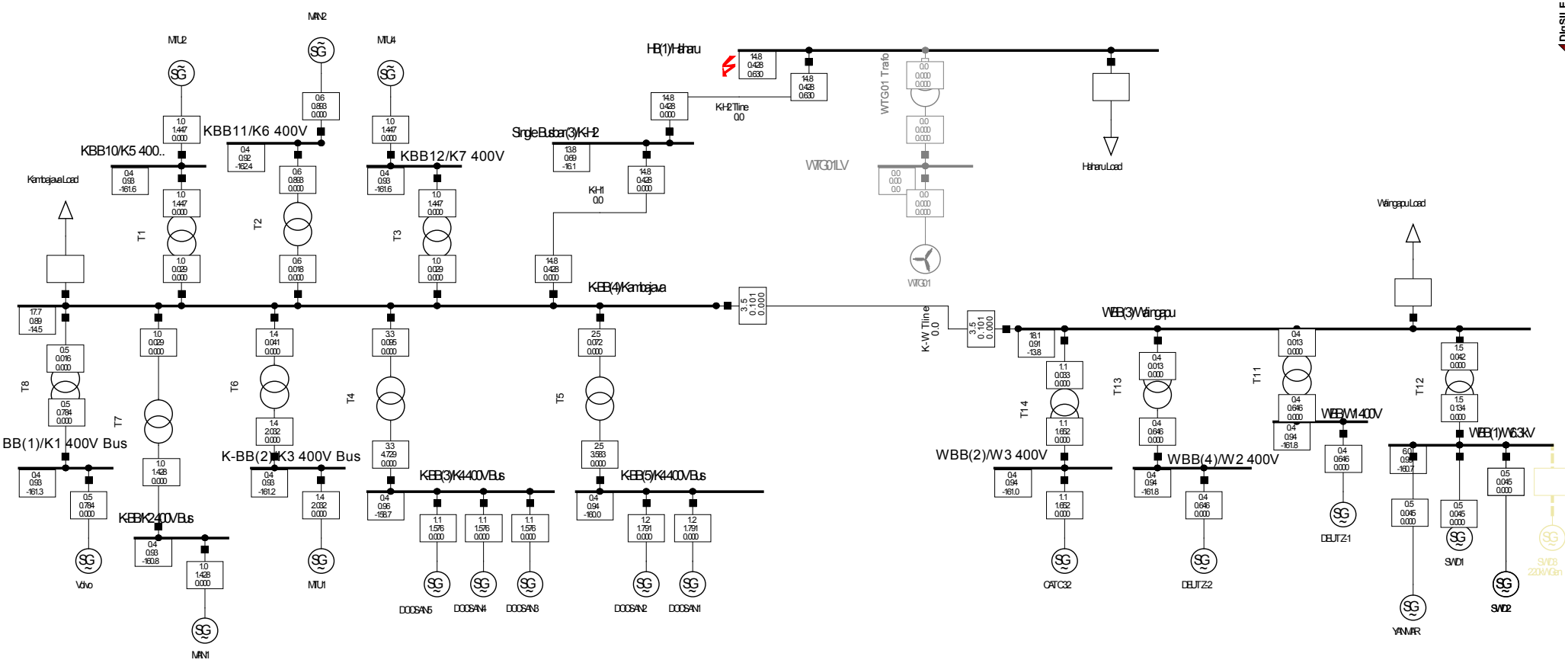

Legends:

Short-Circuit Nodes	*Nodes*
Initial Short-Circuit Power [MVA]	*Line-Line Voltage, Magn*
Initial Short-Circuit Current [kA]	*Voltage, Magnitude [p.u*
Peak Short-Circuit Current [kA]	*Voltage, Angle [deg]*

Figure 9. Short-circuit analysis of the three-phase fault at the point of common coupling (high load)

This report is available at no cost from the National Renewable Energy Laboratory (NREL) at www.nrel.gov/publications.

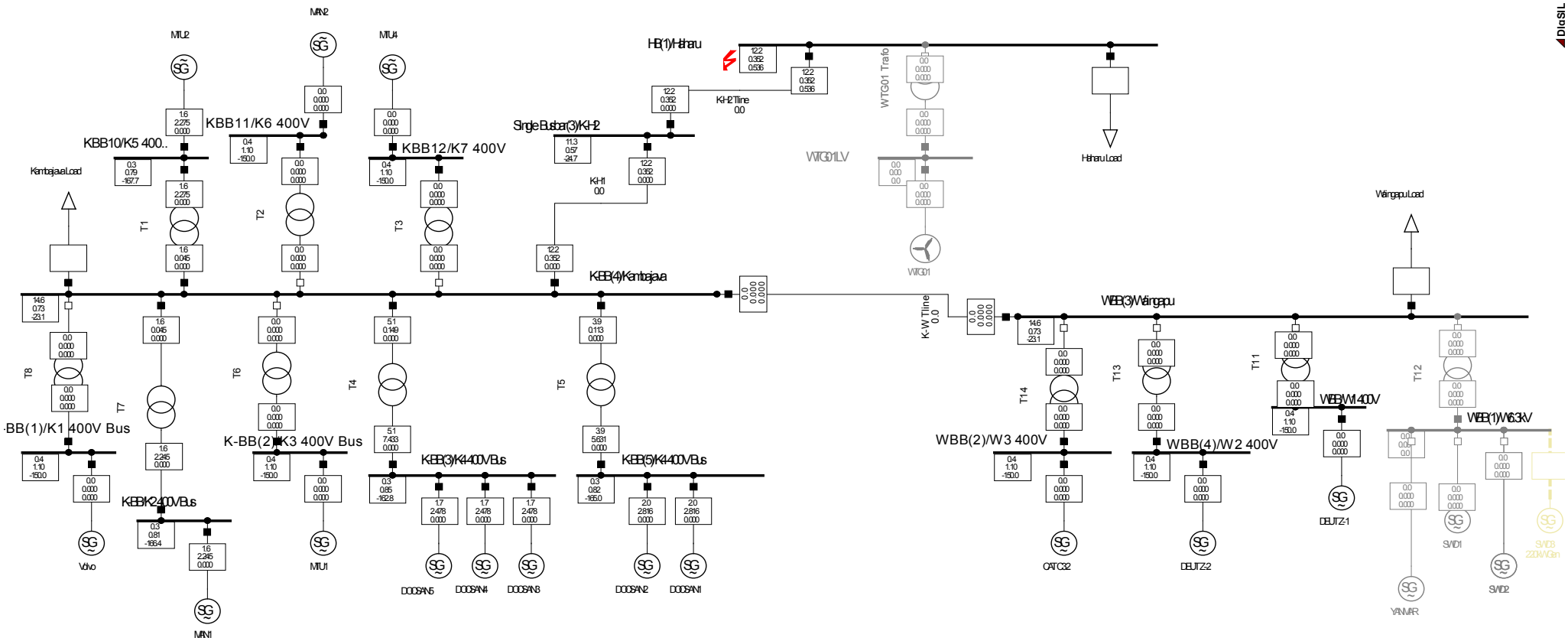

Figure 10. Short-circuit analysis of the three-phase fault at the point of common coupling (low load)

This report is available at no cost from the National Renewable Energy Laboratory (NREL) at www.nrel.gov/publications.

2.3.2 Short-Circuit Fault at the Point of Common Coupling of the Wind Power Plant (Before and After the Wind Turbine Generator Was Installed)

Table 10. Comparison of Short-Circuit Power Contribution by WTG(s)

	High Load		Low Load	
	Kambajawa Bus Shorted	Waingapu Bus Shorted	Kambajawa Bus Shorted	Waingapu Bus Shorted
One 850-kW WTG				
Short-Circuit Power at Shorted Bus	41.8 MVA	34.1 MVA	30.8 MVA	26.4 MVA
Fault Contribution from WTG Generator	1.8 MVA	1.5 MVA	1.9 MVA	1.6 MVA
Two 850-kW WTGs				
Short-Circuit Power at Shorted Bus	34 MVA	39.8 MVA	17.9 MVA	16.3 MVA
Fault Contribution from WTGs	2.8 MVA	3.4 MVA	3.6 MVA	3.2 MVA

As expected, the short-circuit power contribution from the WTG is minimal. The conclusion is that the MVA ratings of the existing protection systems and other existing equipment at the substations should be sufficient to accommodate the integration of one or two 850-kW WTGs.

2.4 Guidelines to Identify and Resolve Unacceptable Differences

The tables below were used to identify and resolve unacceptable differences in the steady-state model validation process.

Note that Table 11 contains the acceptable range of voltage, frequency, and power factor in a distribution network of 20 kV or lower voltage for renewable energy generation plants that have a nameplate capacity 10 MW or less.[3]

Table 11. Guidelines to Identify Acceptable Differences for 20kV network

Quantity	Acceptable Differences
Bus Voltage Magnitude	85% to 110%
Frequency	51 to 47.5 Hz
Power factor	0.9 leading to 0.85 lagging

[3] "Guidelines for Connecting Renewable Energy Generation Plants (REGP) to PLN's Distribution System," Feb 2014, approved by PLN Board of Directors as DK. Dir. PLN No.0357/2014.

This report is available at no cost from the National Renewable Energy Laboratory (NREL) at www.nrel.gov/publications.

Table 12. Guidelines to Resolve Unacceptable Differences

Quantity	Resolution Guidelines
Bus Voltage Magnitude Real Power Flow Reactive Power Flow	Verify that the generation should be modeled as gross instead of net values. Verify that shunt capacitors are sized correctly. Verify that all state estimator loads are accounted for. Verify that the network configuration is modeled appropriately based on the circuit breaker and switch status (e.g., does a bus need to be modeled as a split bus due to an open circuit?). Verify that the modeled line and transformer impedances are correct. Verify that no-load tap changers are modeled appropriately for all transformers. Verify that all other system elements are modeled appropriately. Consider whether PI data should be used when state estimator data are questionable. Consider whether differences are caused by measurement error.

This report is available at no cost from the National Renewable Energy Laboratory (NREL) at www.nrel.gov/publications.

3 Dynamic System Analyses

3.1 The Process

The process used to analyze the dynamic system model was based on the North American Electric Reliability Corporation's Procedures for Validation of Powerflow and Dynamics Cases. Some changes were made based on engineering judgment.

In essence, we analyzed the dynamic system by using the system conditions recorded on a specific day and time as model inputs to see if the resultant model outputs (bus voltages and real and reactive power flows) matched the corresponding recorded system conditions. More importantly, we needed to analyze the pre-fault and post-fault conditions (voltage, frequency, and overloaded lines or transformers) at important buses.

Various contingencies should be considered in discussions with the utility companies. Consideration should be given to the highest probability based on historic data recorded by PLN. Some examples of contingencies for peak and light loads with and without WTGs should be included. For example:

- Disconnection of WTG (light/high wind scenarios)
- Disconnection of the partial loads at buses
- Disconnection of one or several diesel generator sets
- Faults at buses.

For this analysis, we used PowerFactory's electromechanical transient simulation method using root mean square values. In this method, the A-Stable algorithm with automatic step size adaptation was used.

3.2 Dynamic Data of Grid Elements

The data used for the dynamic simulation are in Appendix D. For the elements for which complete dynamic data were not provided by PLN or are not available for East Sumba, we used generic dynamic data.

3.2.1 Transient Faults and Power System Conditions

The following cases were examined:

- Pre-fault: Baseline, no WTG (peak load and off-peak load). This is labeled "No Wind High Load" and "No Wind Low Load"
- Pre-fault: Single WTG is installed (peak load and off-peak load). This is labeled "High Wind High Load" and "High Wind Low Load"
- The term *fault* is used to describe disturbances caused by short circuits or the disconnection of a load or generator.
- Fault analysis followed by:
    - Self-clearing (no load, no generator, no lines were disconnected). It is assumed that the fault self-clears before the circuit breaker is activated.

This report is available at no cost from the National Renewable Energy Laboratory (NREL) at www.nrel.gov/publications.

- No self-clearing. These cases are labeled "no self-clearing." It is assumed that the fault/disturbance persisted with no attempt to clear the fault/disturbance. If a fault is not isolated, eventually the power system may lead to a blackout.

The duration of the fault was chosen to be 9 cycles, or 0.18 s, as commonly used in the United States.

The first set of faults analyzed were faults at each of the three buses: Haharu, Kambajawa, and Waingapu.

3.2.2 Loss of Partial Load

A disturbance that may cause a loss of load is generally caused by an overload or fault. It is usually a sequence of events that occurs because of the system protection. The most likely scenario is the removal of lines connected to a group of loads, and thus the impact is represented by the loss of loads. Because the size of the total generation is approximately 6 MW during peak load and 3.8 MW during off-peak load, the size chosen to represent the loss of load was 400 kW, which is about the size of a typical diesel generator set in East Sumba. Instead of an exact 400-kW load loss, DIgSILENT allows load loss to be specified only as a percent. The table below contains the load loss scenarios.

Table 13. Load Loss Scenarios

Bus	Scenario	High Load (MW)	Low Load (MW)
Haharu	Before Fault	0.104	0.069
	After Fault	0	0
	Loss (100%)	0.104	0.069
Kambajawa	Before Fault	3.494	2.085
	After Fault	2.981	1.776
	Loss (15%)	0.513	0.309
Waingapu	Before Fault	2.084	1.782
	After Fault	1.676	1.434
	Loss (20%)	0.408	0.348

3.2.3 Loss of Partial Generation

In this scenario, it was assumed that the loss of generation was equivalent to the loss of a single diesel generator, and the typical size of a diesel generator in East Sumba is 400 kW. Thus, the loss of a generator was chosen to be 400 kW. On the Kambajawa and Waingapu buses, one generator represented the group of generators that would stay connected during and after the disturbance, whereas the second generator (400 kW) represented the generator that was disconnected during the disturbance.

3.3 Voltage and Frequency Limits in Study

PLN in East Sumba provided some of the limits for acceptable voltage and frequency in the grid; engineering judgment was used for the rest. Following are the limits used for the study:

This report is available at no cost from the National Renewable Energy Laboratory (NREL) at www.nrel.gov/publications.

- The voltage operation limits are defined on ±10% of the nominal voltages.
- The limits of the frequency operation for all components of the grid are defined from 0.97–1.03 p.u.
- The limits of the low-voltage operation for the WTGs are defined on 0.9 p.u. for 60 s and 0.85 p.u. for 11 s.
- The limits of the high-voltage operation for the WTGs are defined on 1.1 p.u. for 60 s, 1.15 p.u. for 2 s, and 1.2 p.u. for 80 ms.
- The limits of the low and high frequency operation for the WTGs are defined as 47 Hz and 53 Hz for 200 ms.
- The limits of the voltage operation for the diesel generation are defined from 0.9–1.1 p.u.
- The limits of the frequency operation for the diesel generation are defined from 47–53 Hz for 200 ms.
- Higher priority is given to wind generation than diesel generation whenever the wind is available. For all of the scenarios considered, no unacceptable situations were identified.

3.4 Scenarios for the Integration of One 850-kW Wind Turbine Generator

A summary of the transient analysis of the scenarios and the observed performance of the network are presented in Table 14. These figures are contained in Appendix E. The highlighted case numbers (bold and underlined) correspond to instability; the type of instability is explained in the observations column.

Table 14. Scenarios and Observations for the Dynamic System Impact Analysis of the Integration of One WTG

Case #	Scenarios	Exhibit #	Observations
Three-phase-to-ground fault at Haharu Bus. The fault is created at 1 s, and it self-clears at 1.18 s.			
1	No Wind High Load	Figure E-1 and E-2	System is stable Line loadings are within limits Voltage drops to about 0.65 p.u. at the buses during the fault and recovers in 0.18 s Frequency drops to 0.97 p.u. and recovers in about 12 s
2	No Wind Low Load	Figure E-3, E-4	System is stable Line loadings are within limits Voltage drops to below 0.625 p.u. at the buses during the fault and recovers in 0.18 s

This report is available at no cost from the National Renewable Energy Laboratory (NREL) at www.nrel.gov/publications.

Case #	Scenarios	Exhibit #	Observations
3	High Wind High Load	Figure E-5, E-6 and E-7	System is stable Line loadings are within limits Frequency drops to 0.965 p.u. and recovers in about 2.5 s Bus voltages dip below 0.60 p.u. at the K and W buses Terminal voltage and power outputs of generators are stable
4	High Wind Low Load	Figure E-8, E-9 and E-10	System is stable Line loadings are within limits Frequency drops to 0.96 p.u. and recovers in about 2.0 s Bus voltages dip below 0.45 p.u. at the K and W buses Terminal voltage and power outputs of generators are stable
Three-phase-to-ground fault at Kambajawa Bus. The fault is created at 1 s, and it self-clears at 1.18 s.			
5	No Wind High Load	Figure E-11 and E-12	System is stable Line loadings are within limits Terminal voltage at generators drops to below 0.3 p.u. during fault Bus voltages at Haharu and Waingapu drop to below 0.1 p.u. during fault Voltage recovers soon after the fault clears
6	No Wind Low Load	Figure E-13	System is stable Line loadings are within limits Terminal voltage at generators drops to below 0.3 p.u. during fault Bus voltages at Haharu and Waingapu drop to below 0.1 p.u. during fault Voltage recovers soon after the fault clears
7	High Wind High Load	Figure E-14 and E-15	System is stable Line loadings are within limits Frequency drops to 0.99 p.u. and recovers in about 2.5 s Bus voltages dip below 0.10 p.u. at the K and W buses Terminal voltage and power outputs of generators are stable

This report is available at no cost from the National Renewable Energy Laboratory (NREL) at www.nrel.gov/publications.

Case #	Scenarios	Exhibit #	Observations
8	High Wind Low Load	Figure E-16 and E-17	System is stable Line loadings are within limits Frequency drops to 0.99 p.u. and recovers in about 8.0 s Bus voltages dip below 0.2 p.u. at the K and W buses Terminal voltage and power outputs of generators are stable
Three-phase-to-ground fault at Waingapu Bus. The fault is created at 1 s, and it self-clears at 1.18 s.			
9	No Wind High Load	Figure E-18 and E-19	Terminal voltage at generators drops to just above 0.1 p.u. during fault Bus voltages at Haharu and Kambajawa drop to below 0.2 p.u. during fault Voltage recovers soon after the fault clears
10	No Wind Low Load	Figure E-20	Terminal voltage at generators drops to just above 0.1 p.u. during fault Bus voltages at Haharu and Kambajawa drop to below 0.2 p.u. during fault Voltage recovers soon after the fault clears
11	High Wind High Load	Figure E-21 and E-22	Terminal voltage at generators drops to just above 0.3 p.u. during fault Bus voltages at Haharu and Kambajawa drop to below 0.2 p.u. during fault Voltage recovers soon after the fault clears
12	High Wind Low Load	Figure E-23 and E-24	Terminal voltage at generators drops to just above 0.3 p.u. during fault Bus voltages at Haharu and Kambajawa drop to below 0.2 p.u. during fault Voltage recovers soon after the fault clears
WTG outage. The fault is created at 1 s, and it self-clears at 1.18 s.			
13	High Wind High Load	Figure E-25, E-26 and E-27	System is stable Line loadings, voltages, and frequency are within limits Voltage transient at Haharu bus WTG power output transient after the fault clears

This report is available at no cost from the National Renewable Energy Laboratory (NREL) at www.nrel.gov/publications.

Case #	Scenarios	Exhibit #	Observations
14	High Wind Low Load	Figure E-28 and E-29	System is stable Line loadings, voltages, and frequency are within limits Voltage transient at Haharu bus WTG power output transient after the fault clears
WTG outage. The fault is created at 1 s, and it does not clear.			
15	High Wind High Load	Figure E-30, E-31 and E-32	Loss of synchronism is noticed for this case. This is expected because the loss of 850 kW of wind power with no self-clearing is a large loss of generation in the grid from which the grid cannot recover. Storage units with the WTGs will alleviate the situation by providing temporary power until additional diesel generators are dispatched to compensate for the large loss of generation.
16	High Wind Low Load	Figure E-33 and E-34	Loss of synchronism is noticed for this case. This is expected because the loss of 850 kW of wind power with no self-clearing is a large loss of generation in the grid from which the grid cannot recover. Storage units in parallel with the WTGs will alleviate the situation by providing temporary power until additional diesel generators are dispatched to compensate for the large loss of generation.
Partial generator outage at Kambajawa Bus. The fault is created at 1 s, and it self-clears at 1.18 s.			
17	No Wind High Load	Figure E-35 and E-36	System is stable Line loadings, voltages, and frequency are within limits
18	No Wind Low Load	Figure E-37	System is stable Line loadings and voltages are within limits After the fault, the frequency goes to 1.015 p.u. and 0.985 p.u., slightly outside the allowable range.
19	High Wind High Load	Figure E-38 and E-39	System is stable Line loadings and voltages are within limits After the fault, the frequency goes to 1.015 p.u. and 0.985 p.u., slightly outside the allowable range.

This report is available at no cost from the National Renewable Energy Laboratory (NREL) at www.nrel.gov/publications.

Case #	Scenarios	Exhibit #	Observations
20	High Wind Low Load	Figure E-40 and E-41	System is stable Line loadings and voltages are within limits After the fault, the frequency goes to 1.015 p.u. and 0.985 p.u., slightly outside the allowable range.
Partial generator outage at Kambajawa Bus. The fault is created at 1 s, and it does not clear.			
21	No Wind High Load	Figure E-42 and E-43	System is unstable After the fault, the frequency keeps dropping, and a frequency runaway is observed.
22	No Wind Low Load	Figure E-44	System is unstable After the fault, the frequency keeps dropping, and a frequency runaway is observed.
23	High Wind High Load	Figure E-45 and E-46	System is unstable After the fault, the frequency keeps dropping, and a frequency runaway is observed.
24	High Wind Low Load	Figure E-47 and E-48	System is unstable After the fault, the frequency keeps dropping, and a frequency runaway is observed. The bus and generator terminal voltage also keep dropping.
Partial generator outage at Waingapu Bus. The fault is created at 1 s, and it self-clears at 1.18 s.			
25	No Wind High Load	Figure E-49 and E-50	System is stable Line loadings, frequency, and bus voltages are within limits
26	High Wind High Load	Figure E-51 and E-52	System is stable Line loadings and bus voltages are within limits During the fault, the frequency goes outside the 1% band twice but damps out after 1 s of fault.
Partial generator outage at Waingapu Bus. The fault is created at 1 s, and it does not clear.			
27	No Wind High Load	Figure E-53 and E-54	System is unstable After the fault, the frequency keeps dropping, and a frequency runaway is observed. In this case, there is insufficient headroom in the dispatched generators.

This report is available at no cost from the National Renewable Energy Laboratory (NREL) at www.nrel.gov/publications.

Case #	Scenarios	Exhibit #	Observations
28	High Wind High Load	Figure E-55 and E-56	System is unstable After the fault, the frequency keeps dropping, and a frequency runaway is observed. In this case, there is insufficient headroom in the dispatched generators.
Load loss at Haharu Bus. The fault is created at 1 s, and it self-clears at 1.18 s.			
29	No Wind High Load	Figure E-57 and E-58	System is stable Line loadings, voltages, and frequency are well within limits
30	No Wind Low Load	Figure E-59	System is stable Line loadings, voltages, and frequency are well within limits
31	High Wind High Load	Figure E-60 and E-61	System is stable Line loadings, voltages, and frequency are well within limits
32	High Wind Low Load	Figure E-62 and E-63	System is stable Line loadings, voltages, and frequency are well within limits
Load loss at Haharu Bus. The fault is created at 1 s, and it does not clear.			
33	No Wind High Load	Figure E-64 and E-65	System is stable Line loadings, voltages, and frequency are well within limits
34	No Wind Low Load	Figure E-66	System is stable Line loadings, voltages, and frequency are well within limits
35	High Wind High Load	Figure E-67 and E-68	System is stable Line loadings, voltages, and frequency are well within limits
36	High Wind Low Load	Figure E-69 and E-70	System is stable Line loadings, voltages, and frequency are well within limits
Load loss at Kambajawa Bus. The fault is created at 1 s, and it self-clears at 1.18 s.			
37	No Wind High Load	Figure E-71 and E-72	System is stable Line loadings, voltages, and frequency are well within limits
38	No Wind Low Load	Figure E-73	System is stable Line loadings, voltages, and frequency are well within limits

This report is available at no cost from the National Renewable Energy Laboratory (NREL) at www.nrel.gov/publications.

Case #	Scenarios	Exhibit #	Observations
39	High Wind High Load	Figure E-74 and E-75	System is stable Line loadings, voltages, and frequency are well within limits
40	High Wind Low Load	Figure E-76 and E-77	System is stable Line loadings, voltages, and frequency are well within limits
Load loss at Kambajawa Bus. The fault is created at 1 s, and it does not clear.			
41	No Wind High Load	Figure E-78 and E-79	System is stable Line loadings, voltages, and frequency are well within limits
42	No Wind Low Load	Figure E-80	System is stable Line loadings, voltages, and frequency are well within limits
43	High Wind High Load	Figure E-81 and E-82	System is stable Line loadings, voltages, and frequency are well within limits
44	High Wind Low Load	Figure E-83 and E-84	System is stable Line loadings, voltages, and frequency are well within limits
Load loss at Waingapu Bus. The fault is created at 1 s, and it self-clears at 1.18 s.			
45	No Wind High Load	Figure E-85 and E-86	System is stable Line loadings, voltages, and frequency are well within limits
46	No Wind Low Load	Figure E-87	System is stable Line loadings, voltages, and frequency are well within limits
47	High Wind High Load	Figure E-88 and E-89	System is stable Line loadings, voltages, and frequency are well within limits
48	High Wind Low Load	Figure E-90 and E-91	System is stable Line loadings, voltages, and frequency are well within limits
Load loss at Waingapu Bus. The fault is created at 1 s, and it does not clear.			
49	No Wind High Load	Figure E-92 and E-93	System is stable Line loadings, voltages, and frequency are well within limits
50	No Wind Low Load	Figure E-94	System is stable Line loadings, voltages, and frequency are well within limits
51	High Wind High Load	Figure E-95 and E-96	System is stable Line loadings, voltages, and frequency are well within limits

This report is available at no cost from the National Renewable Energy Laboratory (NREL) at www.nrel.gov/publications.

Case #	Scenarios	Exhibit #	Observations
52	High Wind Low Load	Figure E-97 and E-98	System is stable Line loadings, voltages, and frequency are well within limits
Short-circuit at Kambajawa-Haharu Transmission Line. The fault is created at 1 s, and it clears in 180 ms.			
53	No Wind High Load	Figure E-99 and E-100	There is islanding of Haharu; the Haharu load will go offline for 180 ms. After the fault clears, the system is stable. The frequency drops to 0.97 p.u., which is outside the acceptable range, for less than 4 s and then returns to a normal level.
54	No Wind Low Load	Figure E-101	There is islanding of Haharu; the Haharu load will go offline for 180 ms. After the fault clears, the system is stable. The frequency drops to 0.97 p.u., which is outside the acceptable range, for less than 4 s and then returns to a normal level.
55	High Wind High Load	Figure E-102 and E-103	There is islanding of Haharu; the Haharu load will go offline for 180 ms. Frequency drops to 0.97 p.u., which is outside the acceptable range, for less than 4 s and then returns to a normal level WTG stays connected
56	High Wind Low Load	Figure E-104 and E-105	There is islanding of Haharu; the Haharu load will go offline for 180 ms. Frequency drops to 0.97 p.u., which is outside the acceptable range, for less than 4 s and then returns to a normal level WTG stays connected
Short-circuit at Kambajawa-Haharu Transmission Line. The fault is created at 1 s, and it does not clear.			
57	No Wind High Load	Figure E-106 and E-107	Relays are not modeled, therefore a sustained short-circuit fault on the transmission line causes a loss of synchronism.
58	No Wind Low Load	Figure E-108	Relays are not modeled, therefore a sustained short-circuit fault on the transmission line causes a loss of synchronism.

This report is available at no cost from the National Renewable Energy Laboratory (NREL) at www.nrel.gov/publications.

Case #	Scenarios	Exhibit #	Observations
59	High Wind High Load	Figure E-109 and E-110	Relays are not modeled, therefore a sustained short-circuit fault on the transmission line causes a loss of synchronism. WTG shuts down
60	High Wind Low Load	Figure E-111 and E-112	Relays are not modeled, therefore a sustained short-circuit fault on the transmission line causes a loss of synchronism. WTG shuts down
Short-circuit at Kambajawa-Waingapu Transmission Line. The fault is created at 1 s, and it self-clears in 180 ms.			
61	No Wind High Load	Figure E-113 and E-114	There is islanding of Waingapu After the fault clears, system is stable Line loadings, voltages, and frequency are within limits
62	No Wind Low Load	Figure E-115	There is islanding of Waingapu; the Waingapu load will go offline for 180 ms. After the fault clears, system is not stable Voltages at all the buses go to zero System loses synchronism
63	High Wind High Load	Figure E-116 and E-117	There is islanding of Waingapu After the fault clears, system is stable Line loadings, voltages, and frequency are within limits
64	High Wind Low Load	Figure E-118 and E-119	There is islanding of Waingapu After the fault clears, system is stable Line loadings, voltages, and frequency are within limits
Short-circuit at Kambajawa-Waingapu Transmission Line. The fault is created at 1 s, and it does not clear.			
65	No Wind High Load	Figure E-120 and E-121	Relays are not modeled, therefore a sustained short-circuit fault on the transmission line causes a loss of synchronism.
66	No Wind Low Load	Figure E-122	Relays are not modeled, therefore a sustained short-circuit fault on the transmission line causes a loss of synchronism.
67	High Wind High Load	Figure E-123 and E-124	Relays are not modeled, therefore a sustained short-circuit fault on the transmission line causes a loss of synchronism.

This report is available at no cost from the National Renewable Energy Laboratory (NREL) at www.nrel.gov/publications.

Case #	Scenarios	Exhibit #	Observations
68	High Wind Low Load	Figure E-125 and E-126	Relays are not modeled, therefore a sustained short-circuit fault on the transmission line causes a loss of synchronism.

3.5 Analysis of the System with the Addition of Storage

The scope of this study included an analysis of storage as a method to overcome the instability of the East Sumba system with the integration of one or two 850-kW WTGs. ABB's PowerStore energy storage (ES) system is used in the analysis. A control model provided by ABB for the ES system was used. It was modeled as a current source, and it independently and instantaneously controls active (I_R) and reactive (I_I) components of the current. The active power-frequency (P-f) controller and reactive power-voltage (Q-V) controller take as input grid frequency and terminal voltage and produce active and reactive current components. The active power-frequency controller provides inertial (rate of change of frequency) and droop (change of frequency) supports. Two types of ES units are available in the PowerStore: Flywheel and Li-ion battery.

Note that even without a WTG on the grid, most of the scenarios cause instability, as shown in the trip report for 2014 (provided by PLN), which indicates that the number of blackouts and trip is high (about one per day). Preliminary analysis of the trip report suggests that this is because of the following reasons: (1) the faults do not clear within the specified setting time of the circuit breakers, (2) generators are dispatched with low headroom (low spinning reserves), (3) a lack of vegetation management causes overhang on the transmission lines, and (4) the fleet of diesel generators is old. Independent of the introduction of 850-kW WTGs, improvements to (1)–(4) and the introduction of storage will reduce the number of blackouts and trips and thereby improve the reliability of the system.

For the dynamic analysis with storage, the following parameter were assumed:

- A 550-kW CAT C32 diesel generator at the Waingapu station is available as a backup generator with an auto-start switch. One or more such generators may be required.
- There is a basic supervisory control system that monitors disturbances and sends an auto-start signal to the backup generator above for a predefined list of disturbances (system parameters).
- The backup generator has a cold-start time of 10 s, which means that it is able to start, synchronize with the grid, and deliver full power within 10 s.

The primary utility of storage analyzed in the scenarios is the delivery of energy during the time gap between the occurrence of a disturbance and start of the reserve generator. The other well-known utility of short-duration storage is to smooth out the short-term variability of wind power and smooth out the load on the diesel generators during ramping up and down of wind power. For 850 kW of wind power in East Sumba, the current set of diesel generators (with assumed inertia, automatic voltage regulation, and governor models) is able to manage the variability and ramping needs (analysis results shown in Appendix E, Figures E-127 to E-136). However, note that the age of the generators strongly suggests that additional variability beyond that caused by

This report is available at no cost from the National Renewable Energy Laboratory (NREL) at www.nrel.gov/publications.

current load variations may lead to higher scheduled and unscheduled maintenance. Therefore, the addition of storage would add to the reliability and resiliency of the grid.

Table 15 contains results of the stability study of different scenarios after the addition of a storage unit. This analysis was conducted by the ABB consulting office in Madrid. The full report is attached as Appendix F.

To determine the optimal size of the storage unit, the following information was used: (1) the amount of power required to replace the loss of generation during a major fault in the system and the available rotating inertia in the system, and (2) the length of time the power should be supplied until the backup generation is online. The following illustration is for a single 850-kW WTG. The same process was conducted for two WTGs.

1. The critical fault considered in this study was the loss of a WTG (850 kW). The headroom available from the scheduled generators during the high and low load scenarios was 597.8 kW and 377.3 kW, respectively. That is, the dispatched generators were able to increase their power output by an amount equal to the headroom. Therefore, there was a gap of 252.1 kW and 472 kW in the high and low load scenarios, respectively, that must be supplied by the storage unit to stabilize the system. Hence, a storage unit with a power capacity of 500 kW was chosen.
2. To determine how long the unit would need to supply this power, the cold-start time of the backup generator needed to be considered. As indicated, a backup generator with a "rated" cold-start time of 10 s was used. Because this generator was 15 years old, the cold-start time was stretched to 30 s, which included the times for cold-start, synchronization, and ramping up to full capacity. The energy capacity of the storage unit was

   500 kW x (30/3600) hours = 4.17 kWh

The size of the storage unit for integrating two 850-kW WTGs at the Haharu Bus in the eastern grid of Sumba is described below.

1. The critical fault considered in this study was the loss of both WTGs (1,700 kW). Based on the available headroom and the assumption that the storage units are sold in increments of 500 kW, a storage unit with a total power capacity of 1,500 kW was chosen.
2. To determine how long the storage unit would need to supply this power, the 10-s cold-start backup generator was supplemented with other backup generators with 60-s start-up times. Considering this situation, the storage supply's energy content should be for 60 s:

   1,500 kW x (60/3600) h = 25 kWh

Therefore, an energy storage unit with a power and energy capacity of 500 kW and 4.17 kWh, respectively, for the case of integrating a single WTG and 1,500 kW and 25 kWh, respectively, for the case of integrating two WTGs were chosen. The selection of the storage (flywheel, battery technology—lithium-ion [Li-ion], lead acid, or other chemistry) and detailed specification and sizing of the storage are not within the scope of this project. The above specified ratings are the requirement for storage; however, note that commercially available

This report is available at no cost from the National Renewable Energy Laboratory (NREL) at www.nrel.gov/publications.

storage units of 500 kW and 1,500 kW will have much larger energy content. For example, the Beacon Flywheel of 500 kW has an energy content of 50 kWh, a SAFT IM20P Li-ion 500-kW battery has an energy content of approximately 160 kWh, the Beacon Flywheel of 1,500 kW has an energy content of 150 kWh, and a SAFT IM20P Li-ion 1,500-kW battery has an energy content of approximately 500 kWh.

This report is available at no cost from the National Renewable Energy Laboratory (NREL) at www.nrel.gov/publications.

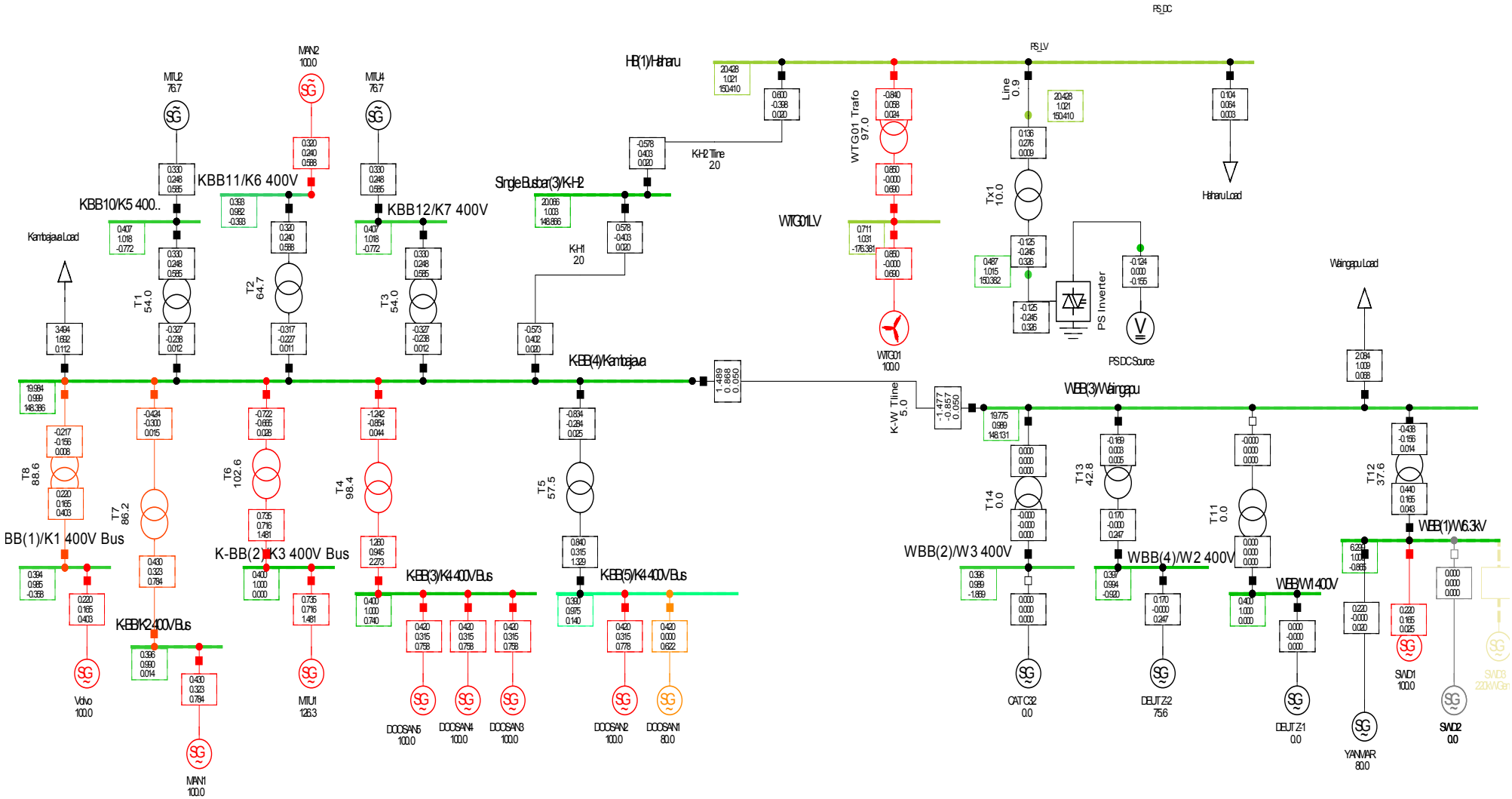

Figure 11. Power flow display: high load with WTG and PowerStore. MTU1 = slack bus

This report is available at no cost from the National Renewable Energy Laboratory (NREL) at www.nrel.gov/publications.

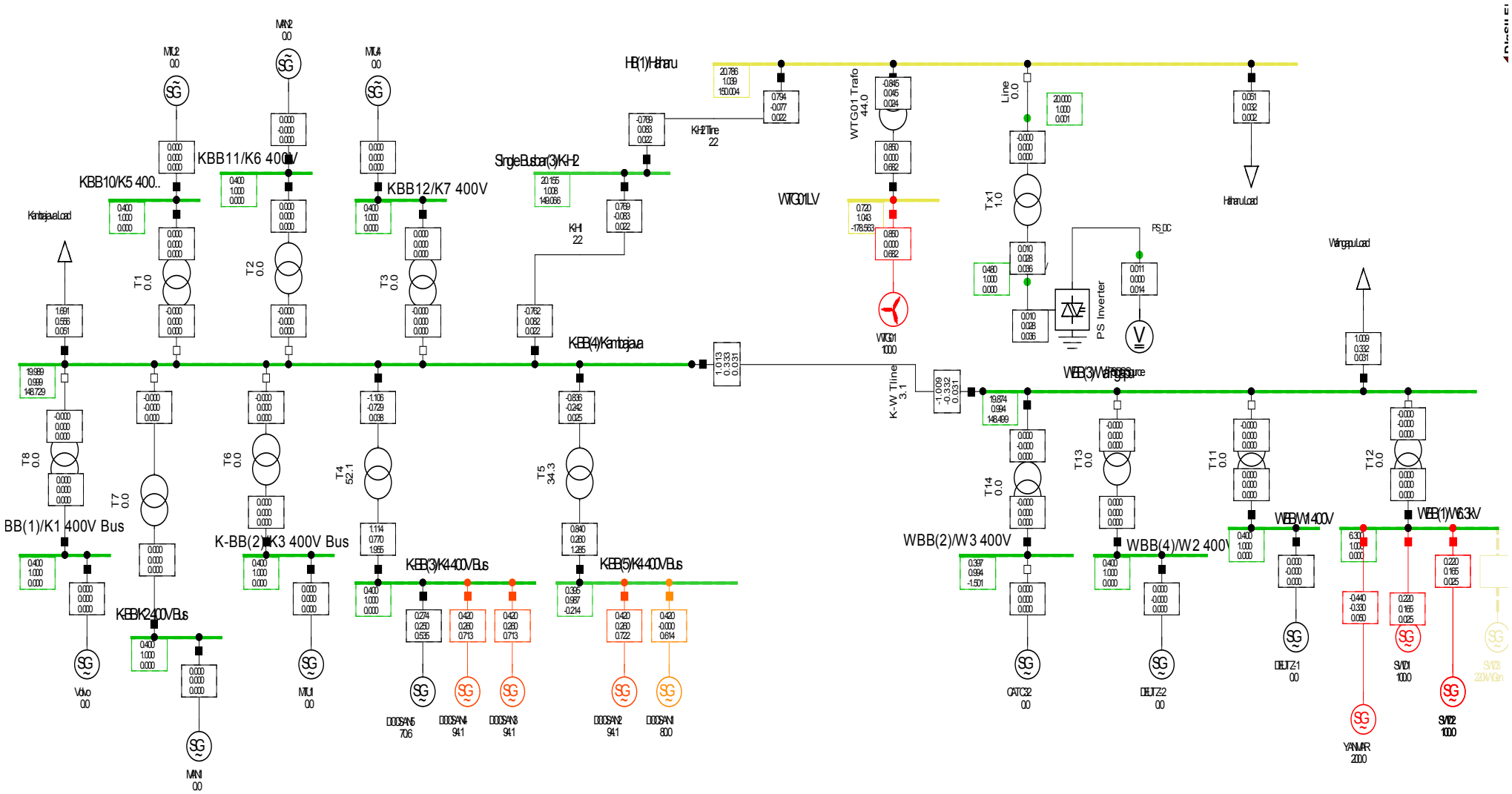

Figure 12. Power flow display: low load with WTG and PowerStore. DOOSAN 5 = slack bus

This report is available at no cost from the National Renewable Energy Laboratory (NREL) at www.nrel.gov/publications.

The figures mentioned in Table 15 for cases 1 to 6 are contained in Appendix F, the dynamic system impact study conducted by ABB. Figures for cases 7 to 10 are contained in Appendix E, the dynamic system impact study conducted by IWE.

Table 15. Scenarios and Observations for the Dynamic System Impact Analysis with Storage (ABB PowerStore)

Case #	Scenarios	Exhibit #	Observations
Loss of Diesel Generator (650 kW)			
1	High Wind High Load	Figure 4 (Appendix F)	The stability support equipment supplies power (400 kW) for 10 s, until the designated generator CAT C32 comes into operation and stabilizes the system. The frequency and voltage fall but are stabilized to an acceptable value. The system is stable.
2	High Wind Low Load	Figure 7 (Appendix F)	The stability support equipment supplies power (400 kW) for 10 s, until the designated generator CAT C32 comes into operation and stabilizes the system. The frequency and voltage fall but are stabilized to an acceptable value. Without the use of the stability support equipment, the system does not withstand the fault because the frequency drops so sharply that the WTG is also lost, and there is not enough time to put the backup generator into service.
Load Loss			
3	High Wind High Load	Figure 5 (Appendix F)	The loss of the largest load (3,494 kW) is simulated, then the stability support equipment absorbs power (200 kW) for 10 s and stabilizes the system, so the system is stable for this case. The use of the stability support equipment is not decisive for the system stability of this case because the generators quickly change their operating point.

This report is available at no cost from the National Renewable Energy Laboratory (NREL) at www.nrel.gov/publications.

Case #	Scenarios	Exhibit #	Observations
4	High Wind Low Load	Figure 8 (Appendix F)	The loss of the largest load (1,691 kW) is simulated, then the stability support equipment absorbs power (330 kW) for 10 s and stabilizes the system, so the system is stable for this case. The use of the stability support equipment is not decisive for the system stability of this case because the generators quickly change their operating point.
Loss of Wind Generator (850 kW)			
5	High Wind High Load	Figure 6 (Appendix F)	The stability support equipment supplies power (400 kW) for 10 s, until the backup generators start and stabilize the system. Without the use of the stability support equipment, the system is not stable because the frequency drops so sharply that the backup generator does not have enough power to compensate for the loss of generation and stabilize the system frequency.
6	High Wind Low Load	Figure 9 (Appendix F)	The stability support equipment supplies power (500 kW) for 10 s, until the backup generator starts and stabilizes the system. Without the use of the stability support equipment, the system is not stable because the frequency drops so sharply that the backup generator does not have enough power to compensate for the loss generation and stabilize the system frequency.
Random output of WTG			
7	High Wind High Load	Figure E-127, E-128 and E-129	Randomness in the output of the WTG causes the output of the diesel generators to vary by 5% for the generator sets that have no headroom and close to 10% for generator set that has headroom. The difference is provided by PowerStore. The frequency and voltage variations are within range.
8	High Wind Low Load	Figure E-130 and E-131	Randomness in the output of the WTG causes the output of the two diesel generators to vary by 2.5%. (The generator sets have no headroom.) The difference is provided by PowerStore. The frequency and voltage variations are within range.

This report is available at no cost from the National Renewable Energy Laboratory (NREL) at www.nrel.gov/publications.

Case #	Scenarios	Exhibit #	Observations
Ramping down of WTG output			
9	High Wind High Load	Figure E-132, E-133 and E-134	During the ramping down of the WTG output, the diesel generator set that has headroom and PowerStore share in ramping up the power output.
10	High Wind Low Load	Figure E-135 and E-136	During the ramping down of the WTG output, the diesel generator set that has headroom and PowerStore share in ramping up the power output. After 18 s, the diesel generator set reaches its peak output, after which PowerStore provides the full ramp-up.

The system was found unstable under the following fault scenarios as well: a short circuit at the Kambajawa-Haharu Transmission Line with no clearing and a short circuit at the Kambajawa-Waingapu Transmission Line with no clearing. If the fault does not clear in 180 ms, the system loses its synchronism. To resolve this issue, the protection relays need to be programmed to isolate the fault.

3.6 Scenarios for the Integration of Two 850-kW Wind Turbine Generators

The figures mentioned in Table 16 are contained in Appendix G. The values contained in the graphs are summarized below.

Table 16. Scenarios and Observations for Dynamic System Impact Analysis for the Integration of Two WTGs

Case #	Scenarios	Exhibit #	Observations
Three-phase-to-ground fault at Kambajawa Bus. The fault was created at 1 s, and it self-clears at 1.18 s.			
1	High Wind High Load	Figure G-1, G-2 and G-3	System is stable Line loadings are within limits Low-voltage ride-through capability of the WTG prevents it from going offline WTG recovers to normal operation quickly after the fault clears
2	High Wind Low Load	Figure G-4 and G-5	System is stable Line loadings are within limits Low-voltage ride-through capability of the WTG prevents it from going offline WTG recovers to normal operation quickly after the fault clears

This report is available at no cost from the National Renewable Energy Laboratory (NREL) at www.nrel.gov/publications.

Case #	Scenarios	Exhibit #	Observations
3	High Wind High Load With PowerStore	Figure G-6 and G-7	System is stable Line loadings are within limits. Terminal voltage and power outputs of generators are stable PowerStore supplies power during the fault
4	High Wind Low Load With PowerStore	Figure G-8 and G-9	System is stable Line loadings are within limits Bus voltages dip below 0.50 p.u. at the H and W buses PowerStore supplies power during the fault, when the WTGs are down
Three-phase-to-ground fault at Waingapu Bus. The fault was created at 1 s, and it self-clears at 1.18 s.			
5	High Wind High Load	Figure G-10, G-11 and G-12	System is stable Line loadings are within limits Low-voltage ride-through capability of the WTG prevents it from going offline WTG recovers to normal operation quickly after the fault clears
6	High Wind Low Load	Figure G-13 and G-14	System is stable Line loadings are within limits Low-voltage ride-through capability of the WTG prevents it from going offline WTG recovers to normal operation quickly after the fault clears
7	High Wind High Load With PowerStore	Figure G-15 and G-16	System is stable Line loadings are within limits. Terminal voltage and power outputs of generators are stable PowerStore supplies power during the fault
8	High Wind Low Load With PowerStore	Figure G-17 and G-18	System is stable Line loadings are within limits Bus voltages dip below 0.50 p.u. at the H and W buses PowerStore supplies power during the fault, when the WTGs are down
Outage of two WTGs. The fault is created at 1 s, and it does not clear.			
9	High Wind High Load	Figure G-19, G-20 and G-21	The frequency keeps falling after the fault, and there is a loss of synchronism in the system. This is expected, because the loss of two 850-kW WTGs with no self-clearing is a large loss of generation from which the grid cannot recover.

This report is available at no cost from the National Renewable Energy Laboratory (NREL) at www.nrel.gov/publications.

Case #	Scenarios	Exhibit #	Observations
10	High Wind Low Load	Figure G-22 and G-23	The frequency keeps falling after the fault, and there is a loss of synchronism in the system. This is expected, because the loss of two 850-kW WTGs with no self-clearing is a large loss of generation from which the grid cannot recover.
11	High Wind High Load With PowerStore	Figure G-24 and G-25	PowerStore supplies power when the two 0.85-MW WTGs go down. It supplies approximately 1.5 MW of active power until the designated generator, CAT C32, starts supplying 0.55 MW of power at 10 s. This reduces the contribution of PowerStore to 0.95 MW. After 30 s, when the PowerStore is depleted, there is a frequency runaway because there is a large loss of power. To prevent a frequency runaway, two additional CAT C32 generators of 0.55-kW capacity with 10-s cold-start times are required in reserve, or a plan to implement load shedding in such cases is required.
12	High Wind Low Load With PowerStore	Figure G-26 and G-27	PowerStore supplies power when the two 0.85-MW WTGs go down. It supplies approximately 1.8 MW of active power until the designated generator, CAT C32, starts supplying 0.55 MW of power at 10 s. This reduces the contribution of PowerStore to 1.2 MW. After 30 s, when the PowerStore is depleted, there is a frequency runaway because there is a large loss of power. To prevent a frequency runaway, two additional CAT C32 generators with capacities of 0.55 kW and 10-s cold-start times are required in reserve, or a plan to implement load shedding in such cases is required.
Generator outage at Kambajawa Bus. The fault was created at 1 s, and it does not clear.			
13	High Wind High Load	Figure G-28, G-29 and G-30	A frequency runaway is observed because the system loses 650 kW of generation. Not enough headroom is available to compensate for this loss. Because of this, the frequency falls for 10 s by an amount large enough to cause the WTGs to disconnect. This results in a loss of power of 2.35 MW in the system. So when the CAT C32 generator starts supplying power at 10 s, the generator is not able to synchronize, and the system as a whole loses synchronism.

This report is available at no cost from the National Renewable Energy Laboratory (NREL) at www.nrel.gov/publications.

Case #	Scenarios	Exhibit #	Observations
14	High Wind Low Load	Figure G-31 and G-32	A frequency runaway is observed because the system loses 420 kW of generation. There is not enough headroom available to compensate for this loss. Because of this, the frequency falls for 10 s by an amount large enough to cause the WTGs to disconnect. This results in a loss of power of 2.35 MW in the system. So when the CAT C32 generator starts supplying power at 10 s, the generator is not able to synchronize, and the system as a whole loses synchronism.
15	High Wind High Load With PowerStore	Figure G-33 and G-34	At the fault, the PowerStore starts supplying approximately 600 kW. This stabilizes the system until the reserve generator, CAT C32, starts supplying power at 10 s. At 30 s, when the PowerStore shut down, the system is still stable.
16	High Wind Low Load With PowerStore	Figure G-35 and G-36	At the fault, the PowerStore starts supplying approximately 500 kW. This stabilizes the system until the reserve generator, CAT C32, starts supplying power at 10 s. There is enough power generation available in the system to compensate for this loss.
Load loss at Kambajawa Bus. The fault was created at 1 s, and it does not clear.			
17	High Wind High Load	Figure G-37, G-38 and G-39	A load of 3.494 MW is lost at 1 s at the Kambajawa Bus. The bus frequency increases to 1.04 p.u. and bus voltages by 0.02 p.u., but overall the system stable. As shown, the generators reduce their generation by 60%–70% of their initial value. In reality, the diesel generator sets would be disconnected to attain stability.
18	High Wind Low Load	Figure G-40 and G-41	A load of 1.691 MW is lost at 1 s at Kambajawa Bus. The bus frequency and bus voltages increase by a very small value, but overall the system is stable. As shown, the generators reduce their generation and reach a negative value. In reality, the diesel generator sets would be disconnected to attain stability.

This report is available at no cost from the National Renewable Energy Laboratory (NREL) at www.nrel.gov/publications.

Case #	Scenarios	Exhibit #	Observations
19	High Wind High Load With PowerStore	Figure G-42 and G-43	A load of 3.494 MW is lost at 1 s at Kambajawa Bus. The bus frequency increases to 1.04 p.u., but overall the system is stable. Because there is PowerStore in the system, it starts absorbing at 1 s. As shown, the generators reduce their generation by 60%–70% of their initial value when the PowerStore shuts down at 30 s. In reality, the diesel generator sets would be disconnected to attain stability.
20	High Wind Low Load With PowerStore	Figure G-44 and G-45	A load of 1.691 MW is lost at 1 s at Kambajawa Bus. The bus frequency and bus voltages increase by a very small value, but overall the system is stable. PowerStore in the system starts absorbing at 1 s. In reality, the diesel generator sets would be disconnected to attain stability.
Kambajawa-Haharu Transmission Line fault. The fault was created at 1 s, and it self-clears at 1.18 s.			
21	High Wind High Load	Figure G-46, G-47 and G-48	Islanding of Haharu is occurring, and the Haharu load goes offline for 180 ms. After clearing the fault, the system is stable—line loadings, voltages, and frequency are within limits.
22	High Wind Low Load	Figure G-49 and G-50	Islanding of Haharu is occurring, and the Haharu load goes offline for 180 ms. After clearing the fault, the system is stable—line loadings, voltages, and frequency are within limits.
23	High Wind High Load With PowerStore	Figure G-51 and G-52	Islanding of Haharu is occurred, and the Haharu load goes offline for 180 ms. After clearing the fault, the system is stable—line loadings, voltages, and frequency are within limits. PowerStore supplies power as the WTGs recover from the low-voltage ride-through.
24	High Wind Low Load With PowerStore	Figure G-53 and G-54	Islanding of Haharu is occurring, and the Haharu load goes offline for 180 ms. After clearing the fault, the system is stable—line loadings, voltages, and frequency are within limits. PowerStore supplies power as the WTGs recover from the low-voltage ride-through.

This report is available at no cost from the National Renewable Energy Laboratory (NREL) at www.nrel.gov/publications.

4 Conclusions

The East Sumba grid was modeled for load flow, short-circuit, and transient analyses.

The load flow analysis suggests that in the baseline and in the case with one WTG, there is no overloading of generators, no overloading of conductors, and all of the bus voltages are within range.

The short-circuit analysis suggests that the short-circuit power ratio is comfortably above the minimum requirement at the Haharu Bus—the point of common coupling of the WTG. In addition, because the short-circuit power contribution of the WTG is small, the ratings of the devices in the substations are not impacted.

The transient stability study conducted to analyze the impact of integrating one 850-kW WTG onto the grid identified transient scenarios with stability issues. Adding storage to the grid along with a backup generator, a hybrid controller, and high-speed communications within the network would ensure stability of the system. Storage equipment with at least 500 kW of capacity and 4.17 kWh of energy would be adequate to ensure stability. In addition to storage, a diesel generator, CAT C32, of 550 kW with a cold-start time of 10 s should be designated as a backup generator. It should be controlled by a hybrid plant controller that manages all the diesel generators, the WTG, and the storage unit based on network parameters, wind production, the state of charge of the storage unit, and other factors. This would also require high-speed communications between the hybrid plant controller and all controllable units on the network.

In conclusion, installing one 850-kW WTG in East Sumba with a 500-kW (with at least 4.17-kWh) storage unit, 550-kW backup diesel generator set with 10-s cold-start time, hybrid power plant controller, and high-speed communications in the network is a solution that will improve the reliability of the energy supply, enhance the stability of the system, and reduce greenhouse gas emissions.

Introducing two 850-kW WTGs would require adding storage equipment of 1,500 kW, which is slightly below the power rating of the two turbines. The energy content was designed to be 60 s, which is sufficient time to start the backup diesel generators. In addition to storage, one CAT C32 diesel generator with a capacity of 550 kW and cold-start time of 10 s and other generators with a total of 950 kW of power with 60-s cold-start times should be designated as backup generators. Note that increasing wind power from 850 kW to 1,700 kW leads to a substantial increase in storage and backup generation, which would incur significantly higher costs to grid upgrades (storage, backup generators, and hybrid controller). It is recommended that as a first step only one 850-kW should be integrated onto the grid. After all the setup issues are resolved, an updated set of data should be collected, and the technical grid integration analysis for the two-turbine scenario should be run again. Options such as colocating the second turbine in the same region as the first or choosing a different location should be evaluated. The new data set and experience gained from the first integration will allow higher fidelity modeling of the grid with more than one WTG.

This report is available at no cost from the National Renewable Energy Laboratory (NREL) at www.nrel.gov/publications.

5 References

Hirsch, B., K. Burman, C. Davidson, M. Elchinger, R. Hardison, D. Karsiwulan, and B. Castermans. 2015. *Sustainable Energy in Remote Indonesian Grids: Accelerating Project Development.* (Technical Report) NREL/TP-7A40-64018. Golden, CO: National Renewable Energy Laboratory. http://www.nrel.gov/docs/fy15osti/64018.pdf.

Hivos International. 2011. Grid-Connected Electricity Generation—Final Report, April 2011. Arnhem: The Netherlands. https://hivos.org/grid-connected-electricity-generation-final-report-april-2011.

This report is available at no cost from the National Renewable Energy Laboratory (NREL) at www.nrel.gov/publications.

Appendix A: Load Flow, Short-Circuit, and Dynamic Model Data

This report is available at no cost from the National Renewable Energy Laboratory (NREL) at www.nrel.gov/publications.

List of Tables

Table A-1. Input Data of Generators 51
Table A-2. Input Data of Transformers 52
Table A-3. Input Data of Transmission Lines..... 53

This report is available at no cost from the National Renewable Energy Laboratory (NREL) at www.nrel.gov/publications.

Table A-1. Input Data of Generators

Particulars	kVA Rating	Rated Voltage (kV)	PF	Connection	Xn	X0	Xd	Xd"	Xd'	Xq	Xq'	Xq"
Volvo	220	0.4	0.8	YN	0.16	0.009	3.36	0.135	0.193	2.01	2.01	0.184
MTU1	650	0.4	0.8	YN	0.175	0.037	3.81	0.155	0.282	2.290	2.290	0.195
MAN1	430	0.4	0.8	YN	0.152	0.009	3.43	0.14	0.175	2.05	2.05	0.163
MTU2	430	0.4	0.8	YN	0.152	0.009	3.43	0.14	0.175	2.05	2.05	0.163
MTU4	430	0.4	0.8	YN	0.152	0.009	3.43	0.14	0.175	2.05	2.05	0.163
MAN2	320	0.4	0.8	YN	0.152	0.026	3.12	0.106	0.194	1.65	1.65	0.171
DOOSAN1	420	0.4	0.8	YN	0.12	0.006	2.839	0.101	0.129	1.267	1.267	0.14
DOOSAN2	420	0.4	0.8	YN	0.12	0.006	2.839	0.101	0.129	1.267	1.267	0.14
DOOSAN3	420	0.4	0.8	YN	0.12	0.006	2.839	0.101	0.129	1.267	1.267	0.14
DOOSAN4	420	0.4	0.8	YN	0.12	0.006	2.839	0.101	0.129	1.267	1.267	0.14
DOOSAN5	420	0.4	0.8	YN	0.12	0.006	2.839	0.101	0.129	1.267	1.267	0.14
CAT	550	0.4	0.8	YN	0.175	0.037	3.81	0.1475	0.2188	2.290	2.290	0.195
YANMAR	220	6.3	0.8	YN	0.16	0.009	3.36	0.135	0.193	2.01	2.01	0.184
DEUTZ1	180	0.4	0.8	YN	0.19	0.11	3.27	0.13	0.18	2.66	2.66	0.26
DEUTZ2	180	0.4	0.8	YN	0.19	0.11	3.27	0.13	0.18	2.66	2.66	0.26
SWD3	220	6.3	0.8	YN	0.16	0.009	3.36	0.135	0.193	2.01	2.01	0.184
SWD2	220	6.3	0.8	YN	0.16	0.009	3.36	0.135	0.193	2.01	2.01	0.184
SWD1	220	6.3	0.8	YN	0.16	0.009	3.36	0.135	0.193	2.01	2.01	0.184

This report is available at no cost from the National Renewable Energy Laboratory (NREL) at www.nrel.gov/publications.

Table A-2. Input Data of Transformers

Sl. No.	kVA Capacity	Primary/Secondary Voltage in kV	Tap Changer, Voltage per Tap	% Positive-Sequence Impedance (z1)	% Zero-Sequence Impedance (z0)	X/R Ratio	Winding Configuration
T1	750	0.4/20	2.50%	4.5	10.2 p.u.	3.5	YN5d, star grounded
T2	750	0.4/20	2.50%	4.5	10.2 p.u.	3.5	YN5d, star grounded
T3	630	0.4/20	2.50%	4	10 p.u.	3.7	YN5d, star grounded
T4	1600	0.4/20	2.50%	6	6	4.95	YN5d, star grounded
T5	1600	0.4/20	2.50%	6	6	4.95	YN5d, star grounded
T6	1000	0.4/20	2.50%	5	11 p.u.	4	YN5d, star grounded
T7	630	0.4/20	2.50%	4	10 p.u.	3.7	YN5d, star grounded
T8	315	0.4/20	2.50%	4	10 p.u.	3.3	YN5d, star grounded
T11	400	0.4/20	2.50%	4	10 p.u.	3.3	YN5d, star grounded
T12	1250	6.3/20	2.50%	5.5	12 p.u.	4.5	YN5d, star grounded
T13	315	0.4/20	2.50%	4	10	3.3	YN5d, star grounded
T14	1000	0.4/20	2.50%	5	11 p.u.	4	YN5d, star grounded
T16	900	0.69/20	2.50%	6.14	6.14	4.5	d11YN, star grounded

This report is available at no cost from the National Renewable Energy Laboratory (NREL) at www.nrel.gov/publications.

Table A-3. Input Data of Transmission Lines

Transmission Line	**K-H2 TLine: Haharu–MHaharu**	**K-H1 TLine: MHaharu–Kambajawa**	**K-W Tline: Kambajawa–Waingapu**
Voltage (kV)	20	20	20
Length (Km)	18	7	7
Rated current (kA)	0.129	0.210	0.323
Zero-sequence resistance (Ohms/Km)	1.106	0.813	0.373
Zero-sequence reactance (Ohms/Km)	1.884	1.87	1.835
Positive-sequence resistance (Ohms/Km)	0.958	0.665	0.225
Positive-sequence reactance (Ohms/Km)	0.39	0.37	0.30
Negative-sequence resistance (Ohms/Km)	0.958	0.665	0.225
Negative-sequence reactance (Ohms/Km)	0.39	0.37	0.30
Positive-sequence susceptance (μS/Km)	0.56	1.4	1.66
Zero-sequence susceptance (μS/Km)	0.56	1.43	1.71

This report is available at no cost from the National Renewable Energy Laboratory (NREL) at www.nrel.gov/publications.

Appendix B: Steady-State and Short-Circuit Model in Power Factory—Input Data

This report is available at no cost from the National Renewable Energy Laboratory (NREL) at www.nrel.gov/publications.

Table of Contents

Generators **56**
Transformers **62**
Transmission Lines **69**
Loads **72**

This report is available at no cost from the National Renewable Energy Laboratory (NREL) at www.nrel.gov/publications.

Generators

- 180-kW generator = DEUT Z-1, DEUT Z-2
- 220 kW–0.4 kV = Volvo
- 220-kW generator = SWD1, SWD2, SWD3, YANMAR
- 320-kW generator = MAN2
- 420-kW generator = DOOSAN1, DOOSAN2, DOOSAN3, DOOSAN4, DOOSAN5
- 430-kW generator = MAN1, MAN2, MTU2, MTU4
- 550-kW generator = CAT C32
- 650-kW generator = MTU1
- WTG01 = Wind turbine generator

```
-------------------------------------------------------------------------------
|Grid:Sumba           Syst.Stage:Sumba          | Annex:                  / 402|
-------------------------------------------------------------------------------
|180kWGen                                Synchronous Machine Type      1   /8   |
-------------------------------------------------------------------------------
|Stator Resistance                                                              |
|   rstr                                                        0.0065  p.u.    |
|   rs(f)                                                                       |
|Subtransient Reactances                                                        |
|   xd''                                                        0.1300  p.u.    |
|   xq''                                                        0.2000  p.u.    |
|   l''(f)                                                                      |
|Zero Sequence Data                                                             |
|   Reactance x0                                                0.1100  p.u.    |
|   l0(f)                                                                       |
|   Resistance r0                                               0.0000  p.u.    |
|   r0(f)                                                                       |
|Consider Transient Parameter         No                                        |
|Negative Sequence Data                                                         |
|   Reactance x2                                                0.1900  p.u.    |
|   l2(f)                                                                       |
|   Resistance r2                                               0.0000  p.u.    |
|   r2(f)                                                                       |
|                                                                               |
|Subtransient Reactances                                                        |
|   Use saturated value               No                                        |
|Inrush Peak Current                                                            |
|   Ratio Ip/In                                                10.0000  p.u.    |
|   Max. Time                                                   0.0200  s       |
|Stall Time                                                                     |
|   Cold                                                       20.0000  s       |
|   Hot                                                        10.0000  s       |
|                                                                               |
|Manufacturer                                                                   |
|Characteristic Name                                                            |
|Data source                          MAN                                       |
|Foreign Key                                                                    |
|Additional Data                                                                |
|Description                                                                    |
|Approval Information                                                           |
|   Status                            Not Approved                              |
|   Modified                                                3/12/2015 4:09:05 PM|
|   Modified by                       pramod                                    |
|                                                                               |
-------------------------------------------------------------------------------
-------------------------------------------------------------------------------
|Grid:Sumba           Syst.Stage:Sumba          | Annex:                  / 403|
-------------------------------------------------------------------------------
|220kW-0.4kV                             Synchronous Machine Type      2   /8   |
-------------------------------------------------------------------------------
|Stator Resistance                                                              |
|   rstr                                                        0.0000  p.u.    |
|   rs(f)                                                                       |
```


This report is available at no cost from the National Renewable Energy Laboratory (NREL) at www.nrel.gov/publications.

```
|Subtransient Reactances                                                  |
|   xd''                                                   0.1350  p.u.   |
|   xq''                                                   0.2000  p.u.   |
|   l''(f)                                                                |
|Zero Sequence Data                                                       |
|   Reactance x0                                           0.0090  p.u.   |
|   l0(f)                                                                 |
|   Resistance r0                                          0.0000  p.u.   |
|   r0(f)                                                                 |
|Consider Transient Parameter         No                                  |
|Negative Sequence Data                                                   |
|   Reactance x2                                           0.1600  p.u.   |
|   l2(f)                                                                 |
|   Resistance r2                                          0.0000  p.u.   |
|   r2(f)                                                                 |
|                                                                         |
|Subtransient Reactances                                                  |
|   Use saturated value               No                                  |
|Inrush Peak Current                                                      |
|   Ratio Ip/In                                           10.0000  p.u.   |
|   Max. Time                                              0.0200  s      |
|Stall Time                                                               |
|   Cold                                                  20.0000  s      |
|   Hot                                                   10.0000  s      |
|                                                                         |
|Manufacturer                                                             |
|Characteristic Name                                                      |
|Data source                          MAN                                 |
|Foreign Key                                                              |
|Additional Data                                                          |
|Description                                                              |
|Approval Information                                                     |
|   Status                            Not Approved                        |
|   Modified                                            3/12/2015 6:30:48 PM|
|   Modified by                       pramod                              |
|                                                                         |
-------------------------------------------------------------------------
-------------------------------------------------------------------------
|Grid:Sumba          Syst.Stage:Sumba          | Annex:                 / 404|
-------------------------------------------------------------------------
|22OkWGen                                Synchronous Machine Type      3   /8   |
-------------------------------------------------------------------------
|Stator Resistance                                                        |
|   rstr                                                   0.0000  p.u.   |
|   rs(f)                                                                 |
|Subtransient Reactances                                                  |
|   xd''                                                   0.1350  p.u.   |
|   xq''                                                   0.2000  p.u.   |
|   l''(f)                                                                |
|Zero Sequence Data                                                       |
|   Reactance x0                                           0.0090  p.u.   |
|   l0(f)                                                                 |
|   Resistance r0                                          0.0000  p.u.   |
|   r0(f)                                                                 |
|Consider Transient Parameter         No                                  |
|Negative Sequence Data                                                   |
|   Reactance x2                                           0.1600  p.u.   |
|   l2(f)                                                                 |
|   Resistance r2                                          0.0000  p.u.   |
|   r2(f)                                                                 |
|                                                                         |
|Subtransient Reactances                                                  |
|   Use saturated value               No                                  |
|Inrush Peak Current                                                      |
|   Ratio Ip/In                                           10.0000  p.u.   |
|   Max. Time                                              0.0200  s      |
|Stall Time                                                               |
|   Cold                                                  20.0000  s      |
|   Hot                                                   10.0000  s      |
|                                                                         |
|Manufacturer                                                             |
|Characteristic Name                                                      |
|Data source                          MAN                                 |
|Foreign Key                                                              |
|Additional Data                                                          |
|Description                                                              |
|Approval Information                                                     |
|   Status                            Not Approved                        |
|   Modified                                            3/11/2015 2:28:52 PM|
|   Modified by                       pramod                              |
|                                                                         |
```


This report is available at no cost from the National Renewable Energy Laboratory (NREL) at www.nrel.gov/publications.

```
-------------------------------------------------------------------------------
-------------------------------------------------------------------------------
|Grid:Sumba           Syst.Stage:Sumba          | Annex:                  / 405|
-------------------------------------------------------------------------------
|320kWGen                                Synchronous Machine Type      4   /8   |
-------------------------------------------------------------------------------
|Stator Resistance                                                              |
|   rstr                                                        0.0130  p.u.   |
|   rs(f)                                                                       |
|Subtransient Reactances                                                        |
|   xd''                                                        0.1060  p.u.   |
|   xq''                                                        0.2000  p.u.   |
|   l''(f)                                                                      |
|Zero Sequence Data                                                             |
|   Reactance x0                                                0.0260  p.u.   |
|   l0(f)                                                                       |
|   Resistance r0                                               0.0000  p.u.   |
|   r0(f)                                                                       |
|Consider Transient Parameter         No                                        |
|Negative Sequence Data                                                         |
|   Reactance x2                                                0.1520  p.u.   |
|   l2(f)                                                                       |
|   Resistance r2                                               0.0000  p.u.   |
|   r2(f)                                                                       |
|                                                                               |
|Subtransient Reactances                                                        |
|   Use saturated value               No                                        |
|Inrush Peak Current                                                            |
|   Ratio Ip/In                                                10.0000  p.u.   |
|   Max. Time                                                   0.0200  s      |
|Stall Time                                                                     |
|   Cold                                                       20.0000  s      |
|   Hot                                                        10.0000  s      |
|                                                                               |
|Manufacturer                                                                   |
|Characteristic Name                                                            |
|Data source                          MAN                                       |
|Foreign Key                                                                    |
|Additional Data                                                                |
|Description                                                                    |
|Approval Information                                                           |
|   Status                            Not Approved                              |
|   Modified                                            4/12/2015 3:45:57 PM|
|   Modified by                       pramod                                    |
|                                                                               |
-------------------------------------------------------------------------------
-------------------------------------------------------------------------------
|Grid:Sumba           Syst.Stage:Sumba          | Annex:                  / 406|
-------------------------------------------------------------------------------
|420kWGen                                Synchronous Machine Type      5   /8   |
-------------------------------------------------------------------------------
|Stator Resistance                                                              |
|   rstr                                                        0.0000  p.u.   |
|   rs(f)                                                                       |
|Subtransient Reactances                                                        |
|   xd''                                                        0.1010  p.u.   |
|   xq''                                                        0.2000  p.u.   |
|   l''(f)                                                                      |
|Zero Sequence Data                                                             |
|   Reactance x0                                                0.0060  p.u.   |
|   l0(f)                                                                       |
|   Resistance r0                                               0.0000  p.u.   |
|   r0(f)                                                                       |
|Consider Transient Parameter         No                                        |
|Negative Sequence Data                                                         |
|   Reactance x2                                                0.1200  p.u.   |
|   l2(f)                                                                       |
|   Resistance r2                                               0.0000  p.u.   |
|   r2(f)                                                                       |
|                                                                               |
|Subtransient Reactances                                                        |
|   Use saturated value               No                                        |
|Inrush Peak Current                                                            |
|   Ratio Ip/In                                                10.0000  p.u.   |
|   Max. Time                                                   0.0200  s      |
|Stall Time                                                                     |
|   Cold                                                       20.0000  s      |
|   Hot                                                        10.0000  s      |
|                                                                               |
|Manufacturer                                                                   |
|Characteristic Name                                                            |
```


This report is available at no cost from the National Renewable Energy Laboratory (NREL) at www.nrel.gov/publications.

```
|Data source                          MAN                                     |
|Foreign Key                                                                  |
|Additional Data                                                              |
|Description                                                                  |
|Approval Information                                                         |
|   Status                            Not Approved                            |
|   Modified                                                3/11/2015 3:49:05 PM|
|   Modified by                       pramod                                  |
|                                                                             |
-------------------------------------------------------------------------------
-------------------------------------------------------------------------------
|Grid:Sumba           Syst.Stage:Sumba          | Annex:                  / 407|
-------------------------------------------------------------------------------
|430kWGen                                Synchronous Machine Type      6   /8   |
-------------------------------------------------------------------------------
|Stator Resistance                                                            |
|   rstr                                                        0.0000  p.u.  |
|   rs(f)                                                                     |
|Subtransient Reactances                                                      |
|   xd''                                                        0.1400  p.u.  |
|   xq''                                                        0.2000  p.u.  |
|   l''(f)                                                                    |
|Zero Sequence Data                                                           |
|   Reactance x0                                                0.0090  p.u.  |
|   l0(f)                                                                     |
|   Resistance r0                                               0.0000  p.u.  |
|   r0(f)                                                                     |
|Consider Transient Parameter         No                                      |
|Negative Sequence Data                                                       |
|   Reactance x2                                                0.1520  p.u.  |
|   l2(f)                                                                     |
|   Resistance r2                                               0.0000  p.u.  |
|   r2(f)                                                                     |
|                                                                             |
|Subtransient Reactances                                                      |
|   Use saturated value               No                                      |
|Inrush Peak Current                                                          |
|   Ratio Ip/In                                                10.0000  p.u.  |
|   Max. Time                                                   0.0200  s     |
|Stall Time                                                                   |
|   Cold                                                       20.0000  s     |
|   Hot                                                        10.0000  s     |
|                                                                             |
|Manufacturer                                                                 |
|Characteristic Name                                                          |
|Data source                          MAN                                     |
|Foreign Key                                                                  |
|Additional Data                                                              |
|Description                                                                  |
|Approval Information                                                         |
|   Status                            Not Approved                            |
|   Modified                                                3/11/2015 2:58:06 PM|
|   Modified by                       pramod                                  |
|                                                                             |
-------------------------------------------------------------------------------
-------------------------------------------------------------------------------
|Grid:Sumba           Syst.Stage:Sumba          | Annex:                  / 408|
-------------------------------------------------------------------------------
|550kWGen                                Synchronous Machine Type      7   /8   |
-------------------------------------------------------------------------------
|Stator Resistance                                                            |
|   rstr                                                        0.0000  p.u.  |
|   rs(f)                                                                     |
|Subtransient Reactances                                                      |
|   xd''                                                        0.1475  p.u.  |
|   xq''                                                        0.2000  p.u.  |
|   l''(f)                                                                    |
|Zero Sequence Data                                                           |
|   Reactance x0                                                0.0370  p.u.  |
|   l0(f)                                                                     |
|   Resistance r0                                               0.0000  p.u.  |
|   r0(f)                                                                     |
|Consider Transient Parameter         No                                      |
|Negative Sequence Data                                                       |
|   Reactance x2                                                0.1750  p.u.  |
|   l2(f)                                                                     |
|   Resistance r2                                               0.0000  p.u.  |
|   r2(f)                                                                     |
|                                                                             |
|Subtransient Reactances                                                      |
|   Use saturated value               No                                      |
```


This report is available at no cost from the National Renewable Energy Laboratory (NREL) at www.nrel.gov/publications.

```
|Inrush Peak Current                                                      |
|   Ratio Ip/In                                          10.0000  p.u.    |
|   Max. Time                                             0.0200  s       |
|Stall Time                                                               |
|   Cold                                                 20.0000  s       |
|   Hot                                                  10.0000  s       |
|                                                                         |
|Manufacturer                                                             |
|Characteristic Name                                                      |
|Data source                          MAN                                 |
|Foreign Key                                                              |
|Additional Data                                                          |
|Description                                                              |
|Approval Information                                                     |
|   Status                            Not Approved                        |
|   Modified                                            3/12/2015 4:31:31 PM|
|   Modified by                       pramod                              |
|                                                                         |
---------------------------------------------------------------------------
---------------------------------------------------------------------------
|Grid:Sumba           Syst.Stage:Sumba          | Annex:                  / 409|
---------------------------------------------------------------------------
|650kW                                  Synchronous Machine Type      8   /8   |
---------------------------------------------------------------------------
|Stator Resistance                                                        |
|   rstr                                                  0.0000  p.u.    |
|   rs(f)                                                                 |
|Subtransient Reactances                                                  |
|   xd''                                                  0.1550  p.u.    |
|   xq''                                                  0.2000  p.u.    |
|   l''(f)                                                                |
|Zero Sequence Data                                                       |
|   Reactance x0                                          0.0370  p.u.    |
|   l0(f)                                                                 |
|   Resistance r0                                         0.0000  p.u.    |
|   r0(f)                                                                 |
|Consider Transient Parameter         No                                  |
|Negative Sequence Data                                                   |
|   Reactance x2                                          0.1750  p.u.    |
|   l2(f)                                                                 |
|   Resistance r2                                         0.0000  p.u.    |
|   r2(f)                                                                 |
|                                                                         |
|Subtransient Reactances                                                  |
|   Use saturated value               No                                  |
|Inrush Peak Current                                                      |
|   Ratio Ip/In                                          10.0000  p.u.    |
|   Max. Time                                             0.0200  s       |
|Stall Time                                                               |
|   Cold                                                 20.0000  s       |
|   Hot                                                  10.0000  s       |
|                                                                         |
|Manufacturer                                                             |
|Characteristic Name                                                      |
|Data source                          MAN                                 |
|Foreign Key                                                              |
|Additional Data                                                          |
|Description                                                              |
|Approval Information                                                     |
|   Status                            Not Approved                        |
|   Modified                                            3/11/2015 3:18:37 PM|
|   Modified by                       pramod                              |
|                                                                         |
---------------------------------------------------------------------------
```


This report is available at no cost from the National Renewable Energy Laboratory (NREL) at www.nrel.gov/publications.

```
-------------------------------------------------------------------------------
|Grid:Sumba          Syst.Stage:Sumba          | Annex:                  / 336|
-------------------------------------------------------------------------------
|WTG01                                  Static Generator              1   /1   |
-------------------------------------------------------------------------------
|Harmonic Source                                                               |
|   Harmonic Currents                                                          |
|   Harmonic currents referred to     Fundamental Current                      |
|Norton Equivalent                                                             |
|   Resistance, r1h                                          99999.0000  p.u.  |
|   Reactance, x1h                                           99999.0000  p.u.  |
|   Frequency-Dependence, r1h(f)                                               |
|   Frequency-Dependence, x1h(f)                                               |
|   Resistance, r2h                                          99999.0000  p.u.  |
|   Reactance, x2h                                           99999.0000  p.u.  |
|   Frequency-Dependence, r2h(f)                                               |
|   Frequency-Dependence, x2h(f)                                               |
|   Resistance, r0h                                          99999.0000  p.u.  |
|   Reactance, x0h                                           99999.0000  p.u.  |
|   Frequency-Dependence, r0h(f)                                               |
|   Frequency-Dependence, x0h(f)                                               |
|Flicker Coefficients                                                          |
|                                                                              |
|Controls                                                                      |
|   Reactive Power                    No                                       |
|Reactive Power Limits                                                         |
|   Min.                              Yes                                      |
|   Max.                              Yes                                      |
|   Scaling Factor (min.)                                      100.0000  %     |
|   Scaling Factor (max.)                                      100.0000  %     |
|   Capability Curve                  ...rary\0.85MW VCS 50Hz Capability Curve |
|                                                                              |
|   Stochastic Model                                                           |
|                                                                              |
|Serial Number                                                                 |
|Year of Construction                                                  0       |
|Commissioning Date                                        12/31/1969 7:00:00 PM
|Characteristic Name                                                           |
|Data source                          MAN                                      |
|Foreign Key                                                                   |
|Additional Data                                                               |
|Owner                                                                         |
|Operator                                                                      |
|Description                                                                   |
|Approval Information                                                          |
|   Status                            Not Approved                             |
|   Modified                                               1/18/2012 3:01:42 AM|
|   Modified by                       PACAL VESTAS                             |
|Operator Comment                                                              |
|                                                                              |
|State Estimation                                                              |
|   Estimate Active Power             No                                       |
|   Estimate Reactive Power           No                                       |
|                                                                              |
|Wind Model                           No                                       |
|                                                                              |
-------------------------------------------------------------------------------
```


This report is available at no cost from the National Renewable Energy Laboratory (NREL) at www.nrel.gov/publications.

Transformers

- 1,000 KVA = T6, T14
- 1,600 KVA = T4, T5
- 315 KVA = T8
- 400 KVA = T11, T13
- 630 KVA = T2, T7
- 750 KVA = T1, T3
- 6.3 KV–20 KV = T12
- WTG TF_0.85-MW VCS = Transformer from WTG to Haharu Bus

```
-------------------------------------------------------------------------------
|Grid:Sumba          Syst.Stage:Sumba          | Annex:                  / 410|
-------------------------------------------------------------------------------
|1000KVA                                 2-Winding Transformer Type    1   /9   |
-------------------------------------------------------------------------------
|Magnetising Impedance                                                          |
|   No Load Current                                          0.0000  %          |
|   No Load Losses                                           0.0000  kW         |
|Distribution of Leakage Reactances (p.u.)                                      |
|   x,Pos.Seq. HV-Side                                       0.5000             |
|   x,Pos.Seq. LV-Side                                       0.5000             |
|Distribution of Leakage Resistances (p.u.)                                     |
|   r,Pos.Seq. HV-Side                                       0.5000             |
|   r,Pos.Seq. LV-Side                                       0.5000             |
|Tap Changer 1                        Yes                                       |
|Type                                 Ratio/Asym. Phase Shifter                 |
|at Side                              HV                                        |
|Additional Voltage per Tap                                  0.0000  %          |
|Phase of du                                                 0.0000  deg        |
|Neutral Position                                                 3             |
|Minimum Position                                                 1             |
|Maximum Position                                                 5             |
|Tap Changer 2                        No                                        |
|   Tap dependent impedance           No                                        |
|Data for K-factor, Factor-K and FHL                                            |
|   Ratio                                                    0.1000             |
|Frequency Dependencies of Pos.-Sequence Impedance                              |
|   r1(f)                                                                       |
|   l1(f)                                                                       |
|Frequency Dependencies of Zero-Sequence Impedance                              |
|   r0(f)                                                                       |
|   l0(f)                                                                       |
|                                                                               |
|Inrush Peak Current                                                            |
|   Ratio Ip/In (1)                                         25.0000  p.u.       |
|   Max. Time (1)                                            0.0100  s          |
|   Ratio Ip/In (2)                                          0.0000  p.u.       |
|   Max. Time (2)                                            0.0000  s          |
|Transformer Type                     0                                         |
|                                                                               |
|Stochastic model                                                               |
|                                                                               |
|Manufacturer                                                                   |
|Characteristic Name                                                            |
|Data source                          MAN                                       |
|Foreign Key                                                                    |
|Additional Data                                                                |
|Description                                                                    |
|Approval Information                                                           |
|   Status                            Not Approved                              |
|   Modified                                            3/12/2015 4:29:15 PM|
|   Modified by                       pramod                                    |
|Rated Power (forced cooling)                                0.0000  MVA        |
|On-load Tap Changer                  No                                        |
|                                                                               |
-------------------------------------------------------------------------------
```


This report is available at no cost from the National Renewable Energy Laboratory (NREL) at www.nrel.gov/publications.

```
-------------------------------------------------------------------------------
|Grid:Sumba          Syst.Stage:Sumba          | Annex:                  / 411|
-------------------------------------------------------------------------------
|1000kVA                                2-Winding Transformer Type    2   /9   |
-------------------------------------------------------------------------------
|Magnetising Impedance                                                         |
|   No Load Current                                          0.0000  %         |
|   No Load Losses                                           0.0000  kW        |
|Distribution of Leakage Reactances (p.u.)                                     |
|   x,Pos.Seq. HV-Side                                       0.5000            |
|   x,Pos.Seq. LV-Side                                       0.5000            |
|Distribution of Leakage Resistances (p.u.)                                    |
|   r,Pos.Seq. HV-Side                                       0.5000            |
|   r,Pos.Seq. LV-Side                                       0.5000            |
|Tap Changer 1                        Yes                                      |
|Type                                 Ratio/Asym. Phase Shifter                |
|at Side                              HV                                       |
|Additional Voltage per Tap                                  2.2200  %         |
|Phase of du                                                 0.0000  deg       |
|Neutral Position                                                 3            |
|Minimum Position                                                 1            |
|Maximum Position                                                 5            |
|Tap Changer 2                        No                                       |
|   Tap dependent impedance           No                                       |
|Data for K-factor, Factor-K and FHL                                           |
|   Ratio                                                    0.1000            |
|Frequency Dependencies of Pos.-Sequence Impedance                             |
|   r1(f)                                                                      |
|   l1(f)                                                                      |
|Frequency Dependencies of Zero-Sequence Impedance                             |
|   r0(f)                                                                      |
|   l0(f)                                                                      |
|                                                                              |
|Inrush Peak Current                                                           |
|   Ratio Ip/In (1)                                         25.0000  p.u.      |
|   Max. Time (1)                                            0.0100  s         |
|   Ratio Ip/In (2)                                          0.0000  p.u.      |
|   Max. Time (2)                                            0.0000  s         |
|Transformer Type                     0                                        |
|                                                                              |
|Stochastic model                                                              |
|                                                                              |
|Manufacturer                                                                  |
|Characteristic Name                                                           |
|Data source                          MAN                                      |
|Foreign Key                                                                   |
|Additional Data                                                               |
|Description                                                                   |
|Approval Information                                                          |
|   Status                            Not Approved                             |
|   Modified                                             3/11/2015 3:29:44 PM|
|   Modified by                       pramod                                   |
|Rated Power (forced cooling)                                0.0000  MVA       |
|On-load Tap Changer                  No                                       |
|                                                                              |
-------------------------------------------------------------------------------
-------------------------------------------------------------------------------
|Grid:Sumba          Syst.Stage:Sumba          | Annex:                  / 412|
-------------------------------------------------------------------------------
|1600kVA                                2-Winding Transformer Type    3   /9   |
-------------------------------------------------------------------------------
|Magnetising Impedance                                                         |
|   No Load Current                                          0.0000  %         |
|   No Load Losses                                           0.0000  kW        |
|Distribution of Leakage Reactances (p.u.)                                     |
|   x,Pos.Seq. HV-Side                                       0.5000            |
|   x,Pos.Seq. LV-Side                                       0.5000            |
|Distribution of Leakage Resistances (p.u.)                                    |
|   r,Pos.Seq. HV-Side                                       0.5000            |
|   r,Pos.Seq. LV-Side                                       0.5000            |
|Tap Changer 1                        Yes                                      |
|Type                                 Ratio/Asym. Phase Shifter                |
|at Side                              HV                                       |
|Additional Voltage per Tap                                  2.2200  %         |
|Phase of du                                                 0.0000  deg       |
|Neutral Position                                                 3            |
|Minimum Position                                                 1            |
|Maximum Position                                                 5            |
|Tap Changer 2                        No                                       |
|   Tap dependent impedance           No                                       |
|Data for K-factor, Factor-K and FHL                                           |
```


This report is available at no cost from the National Renewable Energy Laboratory (NREL) at www.nrel.gov/publications.

```
|   Ratio                                                    0.1000         |
|Frequency Dependencies of Pos.-Sequence Impedance                          |
|   r1(f)                                                                   |
|   l1(f)                                                                   |
|Frequency Dependencies of Zero-Sequence Impedance                          |
|   r0(f)                                                                   |
|   l0(f)                                                                   |
|                                                                           |
|Inrush Peak Current                                                        |
|   Ratio Ip/In (1)                                         25.0000  p.u.   |
|   Max. Time (1)                                            0.0100  s      |
|   Ratio Ip/In (2)                                          0.0000  p.u.   |
|   Max. Time (2)                                            0.0000  s      |
|Transformer Type                    0                                      |
|                                                                           |
|Stochastic model                                                           |
|                                                                           |
|Manufacturer                                                               |
|Characteristic Name                                                        |
|Data source                         MAN                                    |
|Foreign Key                                                                |
|Additional Data                                                            |
|Description                                                                |
|Approval Information                                                       |
|   Status                           Not Approved                           |
|   Modified                                            3/11/2015 3:37:18 PM|
|   Modified by                      pramod                                 |
|Rated Power (forced cooling)                                0.0000  MVA    |
|On-load Tap Changer                 No                                     |
|                                                                           |
-----------------------------------------------------------------------------
-----------------------------------------------------------------------------
|Grid:Sumba          Syst.Stage:Sumba          | Annex:                 / 413|
-----------------------------------------------------------------------------
|315kVA                                 2-Winding Transformer Type    4   /9   |
-----------------------------------------------------------------------------
|Magnetising Impedance                                                      |
|   No Load Current                                          0.0000  %      |
|   No Load Losses                                           0.0000  kW     |
|Distribution of Leakage Reactances (p.u.)                                  |
|   x,Pos.Seq. HV-Side                                       0.5000         |
|   x,Pos.Seq. LV-Side                                       0.5000         |
|Distribution of Leakage Resistances (p.u.)                                 |
|   r,Pos.Seq. HV-Side                                       0.5000         |
|   r,Pos.Seq. LV-Side                                       0.5000         |
|Tap Changer 1                       Yes                                    |
|Type                                Ratio/Asym. Phase Shifter              |
|at Side                             HV                                     |
|Additional Voltage per Tap                                  2.2200  %      |
|Phase of du                                                 0.0000  deg    |
|Neutral Position                                                 3         |
|Minimum Position                                                 1         |
|Maximum Position                                                 5         |
|Tap Changer 2                       No                                     |
|   Tap dependent impedance          No                                     |
|Data for K-factor, Factor-K and FHL                                        |
|   Ratio                                                    0.1000         |
|Frequency Dependencies of Pos.-Sequence Impedance                          |
|   r1(f)                                                                   |
|   l1(f)                                                                   |
|Frequency Dependencies of Zero-Sequence Impedance                          |
|   r0(f)                                                                   |
|   l0(f)                                                                   |
|                                                                           |
|Inrush Peak Current                                                        |
|   Ratio Ip/In (1)                                         25.0000  p.u.   |
|   Max. Time (1)                                            0.0100  s      |
|   Ratio Ip/In (2)                                          0.0000  p.u.   |
|   Max. Time (2)                                            0.0000  s      |
|Transformer Type                    0                                      |
|                                                                           |
|Stochastic model                                                           |
|                                                                           |
|Manufacturer                                                               |
|Characteristic Name                                                        |
|Data source                         MAN                                    |
|Foreign Key                                                                |
|Additional Data                                                            |
|Description                                                                |
|Approval Information                                                       |
|   Status                           Not Approved                           |
```


This report is available at no cost from the National Renewable Energy Laboratory (NREL) at www.nrel.gov/publications.

```
|   Modified                                                3/11/2015 3:09:54 PM|
|   Modified by                        pramod                                  |
|Rated Power (forced cooling)                                  0.0000  MVA     |
|On-load Tap Changer                  No                                      |
|                                                                             |
-------------------------------------------------------------------------------
-------------------------------------------------------------------------------
|Grid:Sumba           Syst.Stage:Sumba          | Annex:                  / 414|
-------------------------------------------------------------------------------
|400KVA                                 2-Winding Transformer Type    5   /9   |
-------------------------------------------------------------------------------
|Magnetising Impedance                                                        |
|   No Load Current                                            0.0000  %      |
|   No Load Losses                                             0.0000  kW     |
|Distribution of Leakage Reactances (p.u.)                                    |
|   x,Pos.Seq. HV-Side                                         0.5000         |
|   x,Pos.Seq. LV-Side                                         0.5000         |
|Distribution of Leakage Resistances (p.u.)                                   |
|   r,Pos.Seq. HV-Side                                         0.5000         |
|   r,Pos.Seq. LV-Side                                         0.5000         |
|Tap Changer 1                        Yes                                     |
|Type                                 Ratio/Asym. Phase Shifter               |
|at Side                              HV                                      |
|Additional Voltage per Tap                                    0.0000  %      |
|Phase of du                                                   0.0000  deg    |
|Neutral Position                                                   3         |
|Minimum Position                                                   1         |
|Maximum Position                                                   5         |
|Tap Changer 2                        No                                      |
|   Tap dependent impedance           No                                      |
|Data for K-factor, Factor-K and FHL                                          |
|   Ratio                                                      0.1000         |
|Frequency Dependencies of Pos.-Sequence Impedance                            |
|   r1(f)                                                                     |
|   l1(f)                                                                     |
|Frequency Dependencies of Zero-Sequence Impedance                            |
|   r0(f)                                                                     |
|   l0(f)                                                                     |
|                                                                             |
|Inrush Peak Current                                                          |
|   Ratio Ip/In (1)                                           25.0000  p.u.   |
|   Max. Time (1)                                              0.0100  s      |
|   Ratio Ip/In (2)                                            0.0000  p.u.   |
|   Max. Time (2)                                              0.0000  s      |
|Transformer Type                     0                                       |
|                                                                             |
|Stochastic model                                                             |
|                                                                             |
|Manufacturer                                                                 |
|Characteristic Name                                                          |
|Data source                          MAN                                     |
|Foreign Key                                                                  |
|Additional Data                                                              |
|Description                                                                  |
|Approval Information                                                         |
|   Status                            Not Approved                            |
|   Modified                                                3/12/2015 4:19:01 PM|
|   Modified by                       pramod                                  |
|Rated Power (forced cooling)                                  0.0000  MVA     |
|On-load Tap Changer                  No                                      |
|                                                                             |
-------------------------------------------------------------------------------
-------------------------------------------------------------------------------
|Grid:Sumba           Syst.Stage:Sumba          | Annex:                  / 415|
-------------------------------------------------------------------------------
|6.3kV-20kV                             2-Winding Transformer Type    6   /9   |
-------------------------------------------------------------------------------
|Magnetising Impedance                                                        |
|   No Load Current                                            0.0000  %      |
|   No Load Losses                                             0.0000  kW     |
|Distribution of Leakage Reactances (p.u.)                                    |
|   x,Pos.Seq. HV-Side                                         0.5000         |
|   x,Pos.Seq. LV-Side                                         0.5000         |
|Distribution of Leakage Resistances (p.u.)                                   |
|   r,Pos.Seq. HV-Side                                         0.5000         |
|   r,Pos.Seq. LV-Side                                         0.5000         |
|Tap Changer 1                        Yes                                     |
|Type                                 Ratio/Asym. Phase Shifter               |
|at Side                              HV                                      |
|Additional Voltage per Tap                                    0.0000  %      |
|Phase of du                                                   0.0000  deg    |
```


This report is available at no cost from the National Renewable Energy Laboratory (NREL) at www.nrel.gov/publications.

```
|Neutral Position                                                  3          |
|Minimum Position                                                  1          |
|Maximum Position                                                  5          |
|Tap Changer 2                        No                                      |
|   Tap dependent impedance           No                                      |
|Data for K-factor, Factor-K and FHL                                          |
|   Ratio                                                     0.1000          |
|Frequency Dependencies of Pos.-Sequence Impedance                            |
|   r1(f)                                                                     |
|   l1(f)                                                                     |
|Frequency Dependencies of Zero-Sequence Impedance                            |
|   r0(f)                                                                     |
|   l0(f)                                                                     |
|                                                                             |
|Inrush Peak Current                                                          |
|   Ratio Ip/In (1)                                          25.0000  p.u.    |
|   Max. Time (1)                                             0.0100  s       |
|   Ratio Ip/In (2)                                           0.0000  p.u.    |
|   Max. Time (2)                                             0.0000  s       |
|Transformer Type                     0                                       |
|                                                                             |
|Stochastic model                                                             |
|                                                                             |
|Manufacturer                                                                 |
|Characteristic Name                                                          |
|Data source                          MAN                                     |
|Foreign Key                                                                  |
|Additional Data                                                              |
|Description                                                                  |
|Approval Information                                                         |
|   Status                            Not Approved                            |
|   Modified                                             3/11/2015 6:00:21 PM|
|   Modified by                       pramod                                  |
|Rated Power (forced cooling)                                 0.0000  MVA     |
|On-load Tap Changer                  No                                      |
|                                                                             |
-------------------------------------------------------------------------------
-------------------------------------------------------------------------------
|Grid:Sumba          Syst.Stage:Sumba          | Annex:                 / 416|
-------------------------------------------------------------------------------
|630kVA                                 2-Winding Transformer Type    7   /9  |
-------------------------------------------------------------------------------
|Magnetising Impedance                                                        |
|   No Load Current                                           0.0000  %       |
|   No Load Losses                                            0.0000  kW      |
|Distribution of Leakage Reactances (p.u.)                                    |
|   x,Pos.Seq. HV-Side                                        0.5000          |
|   x,Pos.Seq. LV-Side                                        0.5000          |
|Distribution of Leakage Resistances (p.u.)                                   |
|   r,Pos.Seq. HV-Side                                        0.5000          |
|   r,Pos.Seq. LV-Side                                        0.5000          |
|Tap Changer 1                        Yes                                     |
|Type                                 Ratio/Asym. Phase Shifter               |
|at Side                              HV                                      |
|Additional Voltage per Tap                                   2.2200  %       |
|Phase of du                                                  0.0000  deg     |
|Neutral Position                                                  3          |
|Minimum Position                                                  1          |
|Maximum Position                                                  5          |
|Tap Changer 2                        No                                      |
|   Tap dependent impedance           No                                      |
|Data for K-factor, Factor-K and FHL                                          |
|   Ratio                                                     0.1000          |
|Frequency Dependencies of Pos.-Sequence Impedance                            |
|   r1(f)                                                                     |
|   l1(f)                                                                     |
|Frequency Dependencies of Zero-Sequence Impedance                            |
|   r0(f)                                                                     |
|   l0(f)                                                                     |
|                                                                             |
|Inrush Peak Current                                                          |
|   Ratio Ip/In (1)                                          25.0000  p.u.    |
|   Max. Time (1)                                             0.0100  s       |
|   Ratio Ip/In (2)                                           0.0000  p.u.    |
|   Max. Time (2)                                             0.0000  s       |
|Transformer Type                     0                                       |
|                                                                             |
|Stochastic model                                                             |
|                                                                             |
|Manufacturer                                                                 |
|Characteristic Name                                                          |
```


This report is available at no cost from the National Renewable Energy Laboratory (NREL) at www.nrel.gov/publications.

```
|Data source                          MAN                                     |
|Foreign Key                                                                  |
|Additional Data                                                              |
|Description                                                                  |
|Approval Information                                                         |
|   Status                            Not Approved                            |
|   Modified                                                3/11/2015 2:46:45 PM|
|   Modified by                       pramod                                  |
|Rated Power (forced cooling)                                  0.0000  MVA    |
|On-load Tap Changer                  No                                      |
|                                                                             |
-------------------------------------------------------------------------------
-------------------------------------------------------------------------------
|Grid:Sumba           Syst.Stage:Sumba          | Annex:                  / 417|
-------------------------------------------------------------------------------
|750KVA                                 2-Winding Transformer Type    8   /9   |
-------------------------------------------------------------------------------
|Magnetising Impedance                                                        |
|   No Load Current                                            0.0000  %      |
|   No Load Losses                                             0.0000  kW     |
|Distribution of Leakage Reactances (p.u.)                                    |
|   x,Pos.Seq. HV-Side                                         0.5000         |
|   x,Pos.Seq. LV-Side                                         0.5000         |
|Distribution of Leakage Resistances (p.u.)                                   |
|   r,Pos.Seq. HV-Side                                         0.5000         |
|   r,Pos.Seq. LV-Side                                         0.5000         |
|Tap Changer 1                        Yes                                     |
|Type                                 Ratio/Asym. Phase Shifter               |
|at Side                              HV                                      |
|Additional Voltage per Tap                                    0.0000  %      |
|Phase of du                                                   0.0000  deg    |
|Neutral Position                                                   3         |
|Minimum Position                                                   1         |
|Maximum Position                                                   5         |
|Tap Changer 2                        No                                      |
|   Tap dependent impedance           No                                      |
|Data for K-factor, Factor-K and FHL                                          |
|   Ratio                                                      0.1000         |
|Frequency Dependencies of Pos.-Sequence Impedance                            |
|   r1(f)                                                                     |
|   l1(f)                                                                     |
|Frequency Dependencies of Zero-Sequence Impedance                            |
|   r0(f)                                                                     |
|   l0(f)                                                                     |
|                                                                             |
|Inrush Peak Current                                                          |
|   Ratio Ip/In (1)                                           25.0000  p.u.   |
|   Max. Time (1)                                              0.0100  s      |
|   Ratio Ip/In (2)                                            0.0000  p.u.   |
|   Max. Time (2)                                              0.0000  s      |
|Transformer Type                     0                                       |
|                                                                             |
|Stochastic model                                                             |
|                                                                             |
|Manufacturer                                                                 |
|Characteristic Name                                                          |
|Data source                          MAN                                     |
|Foreign Key                                                                  |
|Additional Data                                                              |
|Description                                                                  |
|Approval Information                                                         |
|   Status                            Not Approved                            |
|   Modified                                                3/12/2015 10:11:37 PM
|   Modified by                       pramod                                  |
|Rated Power (forced cooling)                                  0.0000  MVA    |
|On-load Tap Changer                  No                                      |
|                                                                             |
-------------------------------------------------------------------------------
-------------------------------------------------------------------------------
|Grid:Sumba           Syst.Stage:Sumba          | Annex:                  / 188|
-------------------------------------------------------------------------------
|WTG TF_0.85MW VCS 50Hz                 2-Winding Transformer Type    5   /5   |
-------------------------------------------------------------------------------
|Technology                           Three Phase Transformer                 |
|Rated Power                                                   0.8500  MVA    |
|Nominal Frequency                                            50.0000  Hz     |
|Rated Voltage                                                                |
|   HV-Side                                                   20.0000  kV     |
|   LV-Side                                                    0.6900  kV     |
|Positive Sequence Impedance                                                  |
|   Short-Circuit Voltage uk                                   6.0000  %      |
```


This report is available at no cost from the National Renewable Energy Laboratory (NREL) at www.nrel.gov/publications.

```
|   Ratio X/R                                                  5.0010         |
|Vector Group                                                                 |
|   HV-Side                          D                                        |
|   LV-Side                          YN                                       |
|   Phase Shift                                               11.0000  *30deg |
|Zero Sequence Impedance                                                      |
|   Short-Circuit Voltage uk0                                  5.4000  %      |
|   SHC-Voltage (Re(uk0)) uk0r                                 0.0000  %      |
|                                                                             |
|Magnetising Impedance                                                        |
|   No Load Current                                            1.2000  %      |
|   No Load Losses                                             0.5000  kW     |
|Distribution of Leakage Reactances (p.u.)                                    |
|   x,Pos.Seq. HV-Side                                         0.5000         |
|   x,Pos.Seq. LV-Side                                         0.5000         |
|Distribution of Leakage Resistances (p.u.)                                   |
|   r,Pos.Seq. HV-Side                                         0.5000         |
|   r,Pos.Seq. LV-Side                                         0.5000         |
|Tap Changer 1                       Yes                                      |
|Type                                Ratio/Asym. Phase Shifter                |
|at Side                             HV                                       |
|Additional Voltage per Tap                                    2.5000  %      |
|Phase of du                                                   0.0000  deg    |
|Neutral Position                                                   0         |
|Minimum Position                                                  -2         |
|Maximum Position                                                   2         |
|Tap Changer 2                       No                                       |
|   Tap dependent impedance          No                                       |
|Magnetising Reactance                                                        |
|   Type                             Linear                                   |
|Transformer Ratio Adaptation        Yes                                      |
|                                                                             |
|On-load Tap Changer                 No                                       |
|                                                                             |
|Class                               FOA                                      |
|                                                                             |
-------------------------------------------------------------------------------
```


This report is available at no cost from the National Renewable Energy Laboratory (NREL) at www.nrel.gov/publications.

Transmission Lines

- AAAC-50 mm = Transmission lines from Kambajawa to Mid-Haharu Bus
- AAAC-150 mm = Transmission lines from Kambajawa to Waingapu Bus
- TLine35 mm = Transmission lines from Mid-Haharu to Haharu Bus

```
--------------------------------------------------------------------------------
|Grid:Sumba          Syst.Stage:Sumba          | Annex:                  / 398|
--------------------------------------------------------------------------------
|AAAC-150mm                              Line Type                     1   /3   |
--------------------------------------------------------------------------------
|Parameters per Length 1,2-Sequence                                              |
|   Susceptance B'                                                 1.6600  uS/km |
|   Ins. Factor                                                    0.0000        |
|Parameters per Length Zero Sequence                                             |
|   Susceptance B0'                                                0.0000  uS/km |
|   Ins. Factor                                                    0.0000        |
|Frequency Dependency of Pos.-Sequence Capacitance                               |
|   Capacitance C'                                                 0.0053  uF/km |
|   C1'(f)                                                                       |
|Frequency Dependency of Zero-Sequence Capacitance                               |
|   Capacitance C0'                                                0.0000  uF/km |
|   C0'(f)                                                                       |
|Frequency Dependencies of Pos.-Sequence Impedance                               |
|   AC-Resistance R'(20°C)                                         0.2250  Ohm/km |
|   R1'(AC)(f)                                                                   |
|   Inductance L'                                                  0.9549  mH/km |
|   L1'(f)                                                                       |
|Frequency Dependencies of Zero-Sequence Impedance                               |
|   AC-Resistance R0'                                              0.0000  Ohm/km |
|   R0'(AC)(f)                                                                   |
|   Inductance L0'                                                 0.0000  mH/km |
|   L0'(f)                                                                       |
|                                                                                |
|Inrush Peak Current                                                             |
|   Ratio Ip/In                                                    0.0000  p.u.  |
|   Maximum Time                                                   0.0000  s     |
|Rated Short-Time (1s) Current (Conductor)                         0.0000  kA    |
|                                                                                |
|Stochastic model                                                                |
|                                                                                |
|Manufacturer                                                                    |
|Characteristic Name                                                             |
|Data source                          MAN                                        |
|Foreign Key                                                                     |
|Additional Data                                                                 |
|Description                                                                     |
|Approval Information                                                            |
|   Status                            Not Approved                               |
|   Modified                                                 3/11/2015 6:20:22 PM|
|   Modified by                       pramod                                     |
|                                                                                |
|System Type                          AC                                         |
|Phases                                                                  3       |
|Number of Neutrals                                                      0       |
|Cable Design Parameter                                                          |
|   Conductor Material                Copper                                     |
|   Insulation Material               0                                          |
|   Cable Cores                       Multi-Core                                 |
|   Rated Voltage                                                   20.0000  kV  |
|   Rated Current                                                    1.0000  kA  |
|   Nominal Cross Section                                            0.0000  mm^2|
|   With Sheath                       No                                         |
|   Sheath Type                       0                                          |
|   Sheath Insulation Material        PVC                                        |
|   Armoured Cable                    No                                         |
|   Radial Cable Screen               No                                         |
|Line Cost                                                           0.0000  $/km |
|                                                                                |
--------------------------------------------------------------------------------
--------------------------------------------------------------------------------
|Grid:Sumba          Syst.Stage:Sumba          | Annex:                  / 399|
--------------------------------------------------------------------------------
|AAAC50mm                                Line Type                     2   /3   |
--------------------------------------------------------------------------------
```


This report is available at no cost from the National Renewable Energy Laboratory (NREL) at www.nrel.gov/publications.

```
|Parameters per Length 1,2-Sequence                                        |
|   Susceptance B'                                          1.4920  uS/km  |
|   Ins. Factor                                             0.0000         |
|Parameters per Length Zero Sequence                                       |
|   Susceptance B0'                                         0.0000  uS/km  |
|   Ins. Factor                                             0.0000         |
|Frequency Dependency of Pos.-Sequence Capacitance                         |
|   Capacitance C'                                          0.0047  uF/km  |
|   C1'(f)                                                                 |
|Frequency Dependency of Zero-Sequence Capacitance                         |
|   Capacitance C0'                                         0.0000  uF/km  |
|   C0'(f)                                                                 |
|Frequency Dependencies of Pos.-Sequence Impedance                         |
|   AC-Resistance R'(20°C)                                  0.6650  Ohm/km |
|   R1'(AC)(f)                                                             |
|   Inductance L'                                           1.1777  mH/km  |
|   L1'(f)                                                                 |
|Frequency Dependencies of Zero-Sequence Impedance                         |
|   AC-Resistance R0'                                       0.0000  Ohm/km |
|   R0'(AC)(f)                                                             |
|   Inductance L0'                                          0.0000  mH/km  |
|   L0'(f)                                                                 |
|                                                                          |
|Inrush Peak Current                                                       |
|   Ratio Ip/In                                             0.0000  p.u.   |
|   Maximum Time                                            0.0000  s      |
|Rated Short-Time (1s) Current (Conductor)                  0.0000  kA     |
|                                                                          |
|Stochastic model                                                          |
|                                                                          |
|Manufacturer                                                              |
|Characteristic Name                                                       |
|Data source                        MAN                                    |
|Foreign Key                                                               |
|Additional Data                                                           |
|Description                                                               |
|Approval Information                                                      |
|   Status                          Not Approved                           |
|   Modified                                          3/11/2015 6:28:58 PM|
|   Modified by                     pramod                                 |
|                                                                          |
|System Type                        AC                                     |
|Phases                                                        3           |
|Number of Neutrals                                            0           |
|Cable Design Parameter                                                    |
|   Conductor Material              Copper                                 |
|   Insulation Material             0                                      |
|   Cable Cores                     Multi-Core                             |
|   Rated Voltage                                        20.0000  kV       |
|   Rated Current                                         1.0000  kA       |
|   Nominal Cross Section                                 0.0000  mm^2     |
|   With Sheath                     No                                     |
|   Sheath Type                     0                                      |
|   Sheath Insulation Material      PVC                                    |
|   Armoured Cable                  No                                     |
|   Radial Cable Screen             No                                     |
|Line Cost                                                  0.0000  $/km   |
|                                                                          |
----------------------------------------------------------------------------
----------------------------------------------------------------------------
|Grid:Sumba          Syst.Stage:Sumba          | Annex:                 / 400|
----------------------------------------------------------------------------
|Tline35mm                              Line Type                    3   /3   |
----------------------------------------------------------------------------
|Parameters per Length 1,2-Sequence                                        |
|   Susceptance B'                                          0.5630  uS/km  |
|   Ins. Factor                                             0.0000         |
|Parameters per Length Zero Sequence                                       |
|   Susceptance B0'                                         0.0000  uS/km  |
|   Ins. Factor                                             0.0000         |
|Frequency Dependency of Pos.-Sequence Capacitance                         |
|   Capacitance C'                                          0.0018  uF/km  |
|   C1'(f)                                                                 |
|Frequency Dependency of Zero-Sequence Capacitance                         |
|   Capacitance C0'                                         0.0000  uF/km  |
|   C0'(f)                                                                 |
|Frequency Dependencies of Pos.-Sequence Impedance                         |
|   AC-Resistance R'(20°C)                                  0.9580  Ohm/km |
|   R1'(AC)(f)                                                             |
|   Inductance L'                                           1.2414  mH/km  |
|   L1'(f)                                                                 |
```


This report is available at no cost from the National Renewable Energy Laboratory (NREL) at www.nrel.gov/publications.

```
|Frequency Dependencies of Zero-Sequence Impedance                          |
|   AC-Resistance R0'                                          0.0000  Ohm/km |
|   R0'(AC)(f)                                                              |
|   Inductance L0'                                             0.0000  mH/km  |
|   L0'(f)                                                                  |
|                                                                           |
|Inrush Peak Current                                                        |
|   Ratio Ip/In                                                0.0000  p.u.   |
|   Maximum Time                                               0.0000  s      |
|Rated Short-Time (1s) Current (Conductor)                     0.0000  kA     |
|                                                                           |
|Stochastic model                                                           |
|                                                                           |
|Manufacturer                                                               |
|Characteristic Name                                                        |
|Data source                          MAN                                   |
|Foreign Key                                                                |
|Additional Data                                                            |
|Description                                                                |
|Approval Information                                                       |
|   Status                            Not Approved                          |
|   Modified                                            3/11/2015 6:38:25 PM|
|   Modified by                       pramod                                |
|                                                                           |
|System Type                          AC                                    |
|Phases                                                             3       |
|Number of Neutrals                                                 0       |
|Cable Design Parameter                                                     |
|   Conductor Material                Copper                                |
|   Insulation Material               0                                     |
|   Cable Cores                       Multi-Core                            |
|   Rated Voltage                                             20.0000  kV    |
|   Rated Current                                              1.0000  kA    |
|   Nominal Cross Section                                      0.0000  mm^2  |
|   With Sheath                       No                                    |
|   Sheath Type                       0                                     |
|   Sheath Insulation Material        PVC                                   |
|   Armoured Cable                    No                                    |
|   Radial Cable Screen               No                                    |
|Line Cost                                                     0.0000  $/km   |
|                                                                           |
-----------------------------------------------------------------------------
```


This report is available at no cost from the National Renewable Energy Laboratory (NREL) at www.nrel.gov/publications.

Loads

- Haharu Load = Load at Haharu Bus
- Kambajawa Load = Load at Kambajawa Bus
- Waingapu Load = Load at Waingapu Bus

```
-------------------------------------------------------------------------------
|Grid:Sumba           Syst.Stage:Sumba          | Annex:                  / 340|
-------------------------------------------------------------------------------
|Haharu Load                              General Load                  1   /3   |
-------------------------------------------------------------------------------
|Harmonic Current Injections                                                     |
|   Harmonic Currents                                                            |
|   Harmonic currents referred to     Fundamental Current                        |
|Fault Contribution                                                              |
|   Scalable Fault Contribution                                                  |
|      Subtransient Short-Circuit Level                          0.0000  MVA/MW |
|      Transient Short-Circuit Level                             0.0000  MVA/MW |
|   Fixed Fault Contribution                                                     |
|      Subtransient Short-Circuit Level                          0.0000  MVA    |
|      Transient Short-Circuit Level                             0.0000  MVA    |
|   R to X'' ratio                                               0.1000         |
|Additional LV Capacitance                                       0.0000  Mvar   |
|                                                                                |
|Controls                                                                        |
|   Allow load shedding               No                                         |
|Costs                                                                           |
|   Costs for load shedding                                      1.0000  $/MVA  |
|Constraints                                                                     |
|   Min. load shedding                                           0.0000  %      |
|   Max. load shedding                                         100.0000  %      |
|                                                                                |
|Number of connected customers                                        1         |
|Priority                                                             0         |
|Contracted Active Power                                         0.0000  MW     |
|Load shedding/transfer (Transmission Option)                                    |
|   Shedding steps                    0                                          |
|   Transferable                                                 0.0000  %      |
|   Alternative Supply (Load)                                                    |
|Interruption costs                                                              |
|   Tariff                                                                       |
|   Scaling factor                                               1.0000         |
|Load Classification                                                             |
|                                                                                |
|Serial Number                                                                   |
|Year of Construction                                                 0          |
|Commissioning Date                                        12/31/1969 7:00:00 PM
|Characteristic Name                                                             |
|Data source                          MAN                                        |
|Foreign Key                                                                     |
|Additional Data                                                                 |
|Owner                                                                           |
|Operator                                                                        |
|Description                                                                     |
|Approval Information                                                            |
|   Status                            Not Approved                               |
|   Modified                                               3/11/2015 6:26:45 PM|
|   Modified by                       pramod                                     |
|                                                                                |
|State Estimation                                                                |
|   Active/Reactive Power                                                        |
|      Estimate Active Power          No                                         |
|      Estimate Reactive Power        No                                         |
|   Scaling Factor                                                               |
|      Estimate Scaling Factor        No                                         |
|                                                                                |
-------------------------------------------------------------------------------
```


This report is available at no cost from the National Renewable Energy Laboratory (NREL) at www.nrel.gov/publications.

```
-------------------------------------------------------------------------------
|Grid:Sumba           Syst.Stage:Sumba          | Annex:                  / 341|
-------------------------------------------------------------------------------
|Kambajawa Load                          General Load                  2   /3   |
-------------------------------------------------------------------------------
|Harmonic Current Injections                                                    |
|   Harmonic Currents                                                           |
|   Harmonic currents referred to     Fundamental Current                       |
|Fault Contribution                                                             |
|   Scalable Fault Contribution                                                 |
|      Subtransient Short-Circuit Level                          0.0000  MVA/MW |
|      Transient Short-Circuit Level                             0.0000  MVA/MW |
|   Fixed Fault Contribution                                                    |
|      Subtransient Short-Circuit Level                          0.0000  MVA    |
|      Transient Short-Circuit Level                             0.0000  MVA    |
|   R to X'' ratio                                               0.1000         |
|Additional LV Capacitance                                       0.0000  Mvar   |
|                                                                               |
|Controls                                                                       |
|   Allow load shedding               No                                        |
|Costs                                                                          |
|   Costs for load shedding                                      1.0000  $/MVA  |
|Constraints                                                                    |
|   Min. load shedding                                           0.0000  %      |
|   Max. load shedding                                         100.0000  %      |
|                                                                               |
|Number of connected customers                                        1         |
|Priority                                                             0         |
|Contracted Active Power                                         0.0000  MW     |
|Load shedding/transfer (Transmission Option)                                   |
|   Shedding steps                    0                                         |
|   Transferable                                                 0.0000  %      |
|   Alternative Supply (Load)                                                   |
|Interruption costs                                                             |
|   Tariff                                                                      |
|   Scaling factor                                               1.0000         |
|Load Classification                                                            |
|                                                                               |
|Serial Number                                                                  |
|Year of Construction                                                 0         |
|Commissioning Date                                     12/31/1969 7:00:00 PM
|Characteristic Name                                                            |
|Data source                          MAN                                       |
|Foreign Key                                                                    |
|Additional Data                                                                |
|Owner                                                                          |
|Operator                                                                       |
|Description                                                                    |
|Approval Information                                                           |
|   Status                            Not Approved                              |
|   Modified                                            3/11/2015 4:23:33 PM|
|   Modified by                       pramod                                    |
|                                                                               |
|State Estimation                                                               |
|   Active/Reactive Power                                                       |
|      Estimate Active Power          No                                        |
|      Estimate Reactive Power        No                                        |
|   Scaling Factor                                                              |
|      Estimate Scaling Factor        No                                        |
|                                                                               |
-------------------------------------------------------------------------------
```


This report is available at no cost from the National Renewable Energy Laboratory (NREL) at www.nrel.gov/publications.

```
-------------------------------------------------------------------------------
|Grid:Sumba           Syst.Stage:Sumba          | Annex:                  / 342|
-------------------------------------------------------------------------------
|Waingapu Load                          General Load                  3   /3   |
-------------------------------------------------------------------------------
|Harmonic Current Injections                                                   |
|   Harmonic Currents                                                          |
|   Harmonic currents referred to     Fundamental Current                      |
|Fault Contribution                                                            |
|   Scalable Fault Contribution                                                |
|      Subtransient Short-Circuit Level                          0.0000  MVA/MW |
|      Transient Short-Circuit Level                             0.0000  MVA/MW |
|   Fixed Fault Contribution                                                   |
|      Subtransient Short-Circuit Level                          0.0000  MVA    |
|      Transient Short-Circuit Level                             0.0000  MVA    |
|   R to X'' ratio                                               0.1000         |
|Additional LV Capacitance                                       0.0000  Mvar   |
|                                                                              |
|Controls                                                                      |
|   Allow load shedding               No                                       |
|Costs                                                                         |
|   Costs for load shedding                                      1.0000  $/MVA  |
|Constraints                                                                   |
|   Min. load shedding                                           0.0000  %      |
|   Max. load shedding                                         100.0000  %      |
|                                                                              |
|Number of connected customers                                        1        |
|Priority                                                             0        |
|Contracted Active Power                                         0.0000  MW     |
|Load shedding/transfer (Transmission Option)                                  |
|   Shedding steps                    0                                        |
|   Transferable                                                 0.0000  %      |
|   Alternative Supply (Load)                                                  |
|Interruption costs                                                            |
|   Tariff                                                                     |
|   Scaling factor                                               1.0000         |
|Load Classification                                                           |
|                                                                              |
|Serial Number                                                                 |
|Year of Construction                                                 0        |
|Commissioning Date                                     12/31/1969 7:00:00 PM
|Characteristic Name                                                           |
|Data source                          MAN                                      |
|Foreign Key                                                                   |
|Additional Data                                                               |
|Owner                                                                         |
|Operator                                                                      |
|Description                                                                   |
|Approval Information                                                          |
|   Status                            Not Approved                             |
|   Modified                                            3/11/2015 6:13:21 PM|
|   Modified by                       pramod                                   |
|                                                                              |
|State Estimation                                                              |
|   Active/Reactive Power                                                      |
|      Estimate Active Power          No                                       |
|      Estimate Reactive Power        No                                       |
|   Scaling Factor                                                             |
|      Estimate Scaling Factor        No                                       |
|                                                                              |
-------------------------------------------------------------------------------
```


This report is available at no cost from the National Renewable Energy Laboratory (NREL) at www.nrel.gov/publications.

Appendix C: Load Profile Results

This report is available at no cost from the National Renewable Energy Laboratory (NREL) at www.nrel.gov/publications.

Table of Contents

No Wind High Load **77**
No Wind Low Load **85**
High Wind High Load (For One WTG) **93**
High Wind Low Load (For One WTG) **101**
High Wind High Load (For Two WTGs) **109**
High Wind Low Load (For Two WTGs) **118**

This report is available at no cost from the National Renewable Energy Laboratory (NREL) at www.nrel.gov/publications.

No Wind High Load

```
-----------------------------------------------------------------------------------------------------------------------------------------
|                 |                                                                    |   DIgSILENT   | Project:                      |
|                 |                                                                    | PowerFactory  |-------------------------------
|                 |                                                                    |    15.2.1     | Date:  4/22/2015              |
-----------------------------------------------------------------------------------------------------------------------------------------
-----------------------------------------------------------------------------------------------------------------------------------------
| Load Flow Calculation                Complete System Report: Substations, Voltage Profiles, Grid Interchange, Area Interchange |
-----------------------------------------------------------------------------------------------------------------------------------------
|     AC Load Flow, balanced, positive sequence                |    Automatic Model Adaptation for Convergence            No        |
|     Automatic Tap Adjust of Transformers            Yes      |    Max. Acceptable Load Flow Error for                             |
|     Consider Reactive Power Limits                  No       |       Nodes                                              0.01 kVA  |
|                                                              |       Model Equations                                    0.01 %    |
-----------------------------------------------------------------------------------------------------------------------------------------
-----------------------------------------------------------------------------------------------------------------------------------------
| Grid: Sumba                System Stage: Sumba           | Study Case: KHTL                      | Annex:                  / 1  |
-----------------------------------------------------------------------------------------------------------------------------------------
|           rated                          Active Reactive Power                |                                                                |
|          Voltage     Bus-voltage         Power   Power   Factor Current Loading|                 Additional Data                        |
|           [kV]  [p.u.]    [kV]   [deg]   [MW]   [Mvar]    [-]    [kA]    [%]  |                                                                |
-----------------------------------------------------------------------------------------------------------------------------------------
|HB(1)                                                                           |                                                                |
|  Haharu  20.00    0.98   19.69  149.44                                         |                                                                |
|   Cub_1  /Lod      Haharu Load            0.10     0.06   0.85    0.00         |Pl0:     0.10 MW   Ql0:   0.06 Mvar                             |
|   Cub_1  /Lne      K-H2 Tline            -0.10    -0.06  -0.85    0.00    0.36 |Pv:      0.65 kW   cLod:  0.00 Mvar L:   18.00 km|
|   Cub_1  /Tr2      WTG01 Trafo            0.00     0.00   1.00    0.00    0.00 |Tap:     0.00      Min:     -2      Max:     2    |
|                                                                                |                                                                |
|K-BB(1)                                                                         |                                                                |
|  K1 400V Bu.40    1.02    0.41    0.56                                         |                                                                |
|   Cub_1  /Sym      Volvo                  0.22     0.17   0.80    0.39  100.00 |Typ:    PQ                                                      |
|   Cub_1  /Tr2      T8                     0.22     0.17   0.80    0.39   85.66 |Tap:     3.00      Min:      1      Max:     5    |
|                                                                                |                                                                |
|K-BB(2)                                                                         |                                                                |
|  K3 400V Bu.40    1.00    0.40    0.00                                         |                                                                |
|   Cub_1  /Sym      MTU1                   0.25     0.11   0.91    0.39   33.32 |Typ:    SL                                                      |
|   Cub_1  /Tr2      T6                     0.25     0.11   0.91    0.39   27.07 |Tap:     3.00      Min:      1      Max:     5    |
|                                                                                |                                                                |
|K-BB(3)                                                                         |                                                                |
|  K4 400V Bu.40    1.02    0.41    1.74                                         |                                                                |
|   Cub_1  /Sym      DOOSAN3                0.42     0.31   0.80    0.74  100.00 |Typ:    PQ                                                      |
|   Cub_1  /Sym      DOOSAN4                0.42     0.31   0.80    0.74  100.00 |Typ:    PQ                                                      |
|   Cub_1  /Sym      DOOSAN5                0.42     0.00   1.00    0.59   80.00 |Typ:    PQ                                                      |
|   Cub_1  /Tr2      T4                     1.26     0.63   0.89    1.99   86.09 |Tap:     3.00      Min:      1      Max:     5    |
|                    Total                -------  -------                        |                                                                |
|                    Generation:            1.26     0.63                        |                                                                |
|                                                                                |                                                                |
-----------------------------------------------------------------------------------------------------------------------------------------
-----------------------------------------------------------------------------------------------------------------------------------------
| Grid: Sumba                System Stage: Sumba           | Study Case: KHTL                      | Annex:                  / 2  |
-----------------------------------------------------------------------------------------------------------------------------------------
|           rated                          Active Reactive Power                |                                                                |
|          Voltage     Bus-voltage         Power   Power   Factor Current Loading|                 Additional Data                        |
|           [kV]  [p.u.]    [kV]   [deg]   [MW]   [Mvar]    [-]    [kA]    [%]  |                                                                |
-----------------------------------------------------------------------------------------------------------------------------------------
|K-BB(4)                                                                         |                                                                |
|  Kambajawa0.00    0.99   19.83  149.38                                         |                                                                |
|   Cub_1  /Lod      Kambajawa Load         3.49     1.69   0.90    0.11         |Pl0:     3.49 MW   Ql0:   1.69 Mvar                             |
```


This report is available at no cost from the National Renewable Energy Laboratory (NREL) at www.nrel.gov/publications.

```
|   Cub_1  /Lne      K-H1                   0.10     0.06   0.88    0.00    0.35 |Pv:      0.17 kW   cLod:  0.00 Mvar L:    7.00 km|
|   Cub_1  /Lne      K-W Tline              0.53     0.18   0.95    0.02    1.64 |Pv:      1.27 kW   cLod:  0.00 Mvar L:    7.00 km|
|   Cub_1  /Tr2      T1                    -0.43    -0.31  -0.81    0.02   70.48 |Tap:     3.00      Min:      1      Max:     5    |
|   Cub_1  /Tr2      T2                    -0.31    -0.22  -0.81    0.01   63.96 |Tap:     5.00      Min:      1      Max:     5    |
|   Cub_1  /Tr2      T3                    -0.43    -0.31  -0.81    0.02   70.48 |Tap:     3.00      Min:      1      Max:     5    |
|   Cub_1  /Tr2      T4                    -1.25    -0.56  -0.91    0.04   86.09 |Tap:     3.00      Min:      1      Max:     5    |
|   Cub_1  /Tr2      T5                    -0.83     0.03  -1.00    0.02   52.63 |Tap:     3.00      Min:      1      Max:     5    |
|   Cub_1  /Tr2      T6                    -0.25    -0.11  -0.92    0.01   27.07 |Tap:     3.00      Min:      1      Max:     5    |
|   Cub_1  /Tr2      T7                    -0.42    -0.30  -0.82    0.02   86.81 |Tap:     5.00      Min:      1      Max:     5    |
|   Cub_1  /Tr2      T8                    -0.22    -0.16  -0.81    0.01   85.66 |Tap:     3.00      Min:      1      Max:     5    |
|                                                                                |                                                  |
|K-BB(5)                                                                         |                                                  |
|  K4 400V Bu.40    1.00    0.40    1.17                                         |                                                  |
|   Cub_1  /Sym      DOOSAN1                0.42     0.00   1.00    0.61   80.00 |Typ:    PQ                                        |
|   Cub_1  /Sym      DOOSAN2                0.42     0.00   1.00    0.61   80.00 |Typ:    PQ                                        |
|   Cub_1  /Tr2      T5                     0.84     0.00   1.00    1.22   52.63 |Tap:     3.00      Min:      1      Max:     5    |
|                    Total               -------  -------                         |                                                  |
|                    Generation:            0.84     0.00                         |                                                  |
|                                                                                |                                                  |
|K-BB                                                                            |                                                  |
|  K2 400V Bu.40    0.98    0.39    1.04                                         |                                                  |
|   Cub_1  /Sym      MAN1                   0.43     0.32   0.80    0.79  100.00 |Typ:    PQ                                        |
|   Cub_1  /Tr2      T7                     0.43     0.32   0.80    0.79   86.81 |Tap:     5.00      Min:      1      Max:     5    |
|                                                                                |                                                  |
|KBB10                                                                           |                                                  |
|  K5 400V  0.40    1.02    0.41    0.49                                         |                                                  |
|   Cub_1  /Sym      MTU2                   0.43     0.32   0.80    0.76  100.00 |Typ:    PQ                                        |
|   Cub_1  /Tr2      T1                     0.43     0.32   0.80    0.76   70.48 |Tap:     3.00      Min:      1      Max:     5    |
|                                                                                |                                                  |
|KBB11                                                                           |                                                  |
|  K6 400V  0.40    0.97    0.39    0.60                                         |                                                  |
|   Cub_1  /Sym      MAN2                   0.31     0.24   0.80    0.58   98.13 |Typ:    PQ                                        |
|   Cub_1  /Tr2      T2                     0.31     0.24   0.80    0.58   63.96 |Tap:     5.00      Min:      1      Max:     5    |
|                                                                                |                                                  |
|KBB12                                                                           |                                                  |
|  K7 400V  0.40    1.02    0.41    0.49                                         |                                                  |
|   Cub_1  /Sym      MTU4                   0.43     0.32   0.80    0.76  100.00 |Typ:    PQ                                        |
|   Cub_1  /Tr2      T3                     0.43     0.32   0.80    0.76   70.48 |Tap:     3.00      Min:      1      Max:     5    |
|                                                                                |                                                  |
-------------------------------------------------------------------------------------------------------------------------------------
-------------------------------------------------------------------------------------------------------------------------------------
| Grid: Sumba                System Stage: Sumba          | Study Case: KHTL                      | Annex:                 / 3  |
-------------------------------------------------------------------------------------------------------------------------------------
|           rated                          Active Reactive Power                                |                                  |
|          Voltage     Bus-voltage         Power   Power   Factor Current Loading|                Additional Data                   |
|           [kV]  [p.u.]    [kV]   [deg]   [MW]   [Mvar]    [-]    [kA]    [%]  |                                                  |
-------------------------------------------------------------------------------------------------------------------------------------
|Single Busbar(3)                                                                |                                                  |
|  K-H2    20.00    0.99   19.80  149.39                                         |                                                  |
|   Cub_1  /Lne      K-H1                  -0.10    -0.06  -0.86    0.00    0.35 |Pv:      0.17 kW   cLod:  0.00 Mvar L:    7.00 km|
|   Cub_1  /Lne      K-H2 Tline             0.10     0.06   0.86    0.00    0.36 |Pv:      0.65 kW   cLod:  0.00 Mvar L:   18.00 km|
|                                                                                |                                                  |
|WBB(1)                                                                          |                                                  |
|  W6.3kV   6.30    1.01    6.35    0.71                                         |                                                  |
|   Cub_1  /Sym      SWD1                   0.22     0.00   1.00    0.02   80.00 |Typ:    PQ                                        |
|   Cub_1  /Sym      SWD2                   0.22     0.17   0.80    0.02  100.00 |Typ:    PQ                                        |
|   Cub_1  /Sym      SWD3                                                         |Typ:    PQ                                        |
|   Cub_1  /Sym      YANMAR                 0.22     0.17   0.80    0.02  100.00 |Typ:    PQ                                        |
```


This report is available at no cost from the National Renewable Energy Laboratory (NREL) at www.nrel.gov/publications.

```
|   Cub_1  /Tr2      T12                   0.66     0.33   0.89    0.07   58.53 |Tap:     3.00      Min:      1      Max:     5   |
|                    Total               -------  -------                       |                                                |
|                    Generation:           0.66     0.33                        |                                                |
|                                                                                |                                                |
|WBB(2)                                                                          |                                                |
|  W3 400V  0.40    1.01    0.41    0.50                                         |                                                |
|   Cub_1  /Sym      CAT C32               0.55     0.41   0.80    0.98  100.00 |Typ:    PQ                                      |
|   Cub_1  /Tr2      T14                   0.55     0.41   0.80    0.98   67.76 |Tap:     3.00      Min:      1      Max:     5   |
|                                                                                |                                                |
|WBB(3)                                                                          |                                                |
|  Waingapu20.00    0.99   19.77  149.26                                         |                                                |
|   Cub_1  /Lod      Waingapu Load         2.08     1.01   0.90    0.07         |Pl0:     2.08 MW   Ql0:   1.01 Mvar                |
|   Cub_1  /Lne      K-W Tline            -0.53    -0.19  -0.94    0.02    1.64 |Pv:      1.27 kW   cLod:  0.00 Mvar L:    7.00 km|
|   Cub_1  /Tr2      T11                  -0.18     0.00  -1.00    0.01   45.03 |Tap:     3.00      Min:      1      Max:     5   |
|   Cub_1  /Tr2      T12                  -0.65    -0.31  -0.91    0.02   58.53 |Tap:     3.00      Min:      1      Max:     5   |
|   Cub_1  /Tr2      T13                  -0.18    -0.13  -0.81    0.01   55.27 |Tap:     3.00      Min:      1      Max:     5   |
|   Cub_1  /Tr2      T14                  -0.54    -0.39  -0.81    0.02   67.76 |Tap:     3.00      Min:      1      Max:     5   |
|                                                                                |                                                |
|WBB(4)                                                                          |                                                |
|  W2 400V  0.40    1.01    0.40    0.02                                         |                                                |
|   Cub_1  /Sym      DEUT Z-2              0.18     0.13   0.80    0.32   98.89 |Typ:    PQ                                      |
|   Cub_1  /Tr2      T13                   0.18     0.13   0.80    0.32   55.27 |Tap:     3.00      Min:      1      Max:     5   |
|                                                                                |                                                |
|WBB                                                                             |                                                |
|  W1 400V  0.40    0.99    0.40    0.26                                         |                                                |
|   Cub_1  /Sym      DEUT Z-1              0.18     0.00   1.00    0.26   79.56 |Typ:    PQ                                      |
|   Cub_1  /Tr2      T11                   0.18     0.00   1.00    0.26   45.03 |Tap:     3.00      Min:      1      Max:     5   |
|                                                                                |                                                |
|WTG01LV                                                                         |                                                |
|            0.69    0.00    0.00    0.00                                       |                                                |
|   Cub_4  /Genstat  WTG01                 0.00     0.00   1.00    0.00    0.00 |                                                |
|   Cub_3  /Tr2      WTG01 Trafo           0.00     0.00   1.00    0.00    0.00 |Tap:     0.00      Min:     -2      Max:     2   |
|                                                                                |                                                |
--------------------------------------------------------------------------------------------------------------------------------
--------------------------------------------------------------------------------------------------------------------------------
|                 |                                                          |   DIgSILENT   | Project:                      |
|                 |                                                          | PowerFactory  |-------------------------------
|                 |                                                          |    15.2.1     | Date:  4/22/2015              |
--------------------------------------------------------------------------------------------------------------------------------
--------------------------------------------------------------------------------------------------------------------------------
| Load Flow Calculation                Complete System Report: Substations, Voltage Profiles, Grid Interchange, Area Interchange |
--------------------------------------------------------------------------------------------------------------------------------
|     AC Load Flow, balanced, positive sequence                |    Automatic Model Adaptation for Convergence            No        |
|     Automatic Tap Adjust of Transformers            Yes      |    Max. Acceptable Load Flow Error for                                |
|     Consider Reactive Power Limits                  No       |       Nodes                                          0.01 kVA  |
|                                                              |       Model Equations                                0.01 %    |
--------------------------------------------------------------------------------------------------------------------------------
--------------------------------------------------------------------------------------------------------------------------------
| Grid: Sumba                System Stage: Sumba           | Study Case: KHTL                      | Annex:                  / 4  |
--------------------------------------------------------------------------------------------------------------------------------
|                     rtd.V      Bus - voltage                                          Voltage - Deviation [%]                      |
|                      [kV]  [p.u.]     [kV]  [deg]                -10         -5            0           +5         +10            |
--------------------------------------------------------------------------------------------------------------------------------
|HB(1)                                                                                                                            |
|  Haharu             20.00   0.984    19.69 149.44                                   <<<<|                                     |
|K-BB(1)                                                                                                                          |
|  K1 400V Bus         0.40   1.019     0.41   0.56                                        |>>>>>                                 |
|K-BB(2)                                                                                                                          |
```


This report is available at no cost from the National Renewable Energy Laboratory (NREL) at www.nrel.gov/publications.

```
|  K3 400V Bus         0.40   1.000     0.40   0.00                                        |                                  |
|K-BB(3)
|  K4 400V Bus         0.40   1.023     0.41   1.74                                        |>>>>>                             |
|K-BB(4)
|  Kambajawa          20.00   0.992    19.83 149.38                                      <<|                                |
|K-BB(5)
|  K4 400V Bus         0.40   0.997     0.40   1.17                                        <|                                |
|K-BB
|  K2 400V Bus         0.40   0.983     0.39   1.04                                    <<<<|                                |
|KBB10
|  K5 400V             0.40   1.017     0.41   0.49                                        |>>>>                              |
|KBB11
|  K6 400V             0.40   0.974     0.39   0.60                                  <<<<<<|                                |
|KBB12
|  K7 400V             0.40   1.017     0.41   0.49                                        |>>>>                              |
|Single Busbar(3)
|  K-H2               20.00   0.990    19.80 149.39                                      <<|                                |
|WBB(1)
|  W6.3kV              6.30   1.009     6.35   0.71                                        |>>                                |
|WBB(2)
|  W3 400V             0.40   1.015     0.41   0.50                                        |>>>>                              |
|WBB(3)
|  Waingapu           20.00   0.989    19.77 149.26                                     <<<|                                |
|WBB(4)
|  W2 400V             0.40   1.006     0.40   0.02                                        |>>                                |
|WBB
|  W1 400V             0.40   0.994     0.40   0.26                                        <|                                |
|WTG01LV                                                                                                                     |
-------------------------------------------------------------------------------------------------------------------------------
-------------------------------------------------------------------------------------------------------------------------------
| Grid: Sumba                System Stage: Sumba           | Study Case: KHTL                      | Annex:                  / 5  |
-------------------------------------------------------------------------------------------------------------------------------
|                     rtd.V      Bus - voltage                                        Voltage - Deviation [%]                    |
|                      [kV]  [p.u.]     [kV]  [deg]                -10         -5            0           +5         +10          |
-------------------------------------------------------------------------------------------------------------------------------
|                      0.69   0.000     0.00   0.00                  <\\\\\\\\\\\\\\\\\\\\\\\\|                                |
-------------------------------------------------------------------------------------------------------------------------------
```


This report is available at no cost from the National Renewable Energy Laboratory (NREL) at www.nrel.gov/publications.

		DIgSILENT PowerFactory 15.2.1	Project:
			Date: 4/22/2015

Load Flow Calculation	Complete System Report: Substations, Voltage Profiles, Grid Interchange, Area Interchange

AC Load Flow, balanced, positive sequence		Automatic Model Adaptation for Convergence	No
Automatic Tap Adjust of Transformers	Yes	Max. Acceptable Load Flow Error for	
Consider Reactive Power Limits	No	Nodes	0.01 kVA
		Model Equations	0.01 %

Grid: Sumba	System Stage: Sumba	Study Case: KHTL	Annex: / 6

Volt. Level [kV]	Generation [MW]/ [Mvar]	Motor Load [MW]/ [Mvar]	Load [MW]/ [Mvar]	Compen- sation [MW]/ [Mvar]	External Infeed [MW]/ [Mvar]	Interchange to	Power Interchange [MW]/ [Mvar]	Total Losses [MW]/ [Mvar]	Load Losses [MW]/ [Mvar]	Noload Losses [MW]/ [Mvar]
0.40	5.08	0.00	0.00	0.00	0.00			0.00	0.00	0.00
	2.65	0.00	0.00	0.00	0.00			0.00	0.00	0.00
						20.00 kV	5.08	0.05	0.05	0.00
							2.65	0.21	0.21	0.00
0.69	0.00	0.00	0.00	0.00	0.00			0.00	0.00	0.00
	0.00	0.00	0.00	0.00	0.00			0.00	0.00	0.00
6.30	0.66	0.00	0.00	0.00	0.00			0.00	0.00	0.00
	0.33	0.00	0.00	0.00	0.00			0.00	0.00	0.00
						20.00 kV	0.66	0.01	0.01	0.00
							0.33	0.02	0.02	0.00
20.00	0.00	0.00	5.68	0.00	0.00			0.00	0.00	0.00
	0.00	0.00	2.77	0.00	0.00			-0.01	0.00	-0.01
						0.40 kV	-5.03	0.05	0.05	0.00
							-2.45	0.21	0.21	0.00
						6.30 kV	-0.65	0.01	0.01	0.00
							-0.31	0.02	0.02	0.00
Total:	5.74	0.00	5.68	0.00	0.00		0.00	0.06	0.06	0.00
	2.98	0.00	2.77	0.00	0.00		0.00	0.22	0.23	-0.01

		DIgSILENT PowerFactory 15.2.1	Project:
			Date: 4/22/2015

Load Flow Calculation	Complete System Report: Substations, Voltage Profiles, Grid Interchange, Area Interchange

AC Load Flow, balanced, positive sequence		Automatic Model Adaptation for Convergence	No
Automatic Tap Adjust of Transformers	Yes	Max. Acceptable Load Flow Error for	
Consider Reactive Power Limits	No	Nodes	0.01 kVA
		Model Equations	0.01 %

This report is available at no cost from the National Renewable Energy Laboratory (NREL) at www.nrel.gov/publications.

| Total System Summary | Study Case: KHTL | Annex: / 7 |

	Generation [MW]/ [Mvar]	Motor Load [MW]/ [Mvar]	Load [MW]/ [Mvar]	Compen-sation [MW]/ [Mvar]	External Infeed [MW]/ [Mvar]	Inter Area Flow [MW]/ [Mvar]	Total Losses [MW]/ [Mvar]	Load Losses [MW]/ [Mvar]	Noload Losses [MW]/ [Mvar]
\pramod\Sumba-V3_NWHL\Network Model\Network Data\Sumba									
	5.74	0.00	5.68	0.00	0.00	0.00	0.06	0.06	0.00
	2.98	0.00	2.77	0.00	0.00	0.00	0.22	0.23	-0.01
Total:									
	5.74	0.00	5.68	0.00	0.00		0.06	0.06	0.00
	2.98	0.00	2.77	0.00	0.00		0.22	0.23	-0.01

DIgSILENT PowerFactory 15.2.1	Project:	Date: 4/22/2015

Load Flow Calculation	Complete System Report: Substations, Voltage Profiles, Grid Interchange, Area Interchange

AC Load Flow, balanced, positive sequence		Automatic Model Adaptation for Convergence	No
Automatic Tap Adjust of Transformers	Yes	Max. Acceptable Load Flow Error for	
Consider Reactive Power Limits	No	Nodes	0.01 kVA
		Model Equations	0.01 %

| Area: Kambajawa | Study Case: KHTL | Annex: / 8 |

Volt. Level [kV]	Generation [MW]/ [Mvar]	Motor Load [MW]/ [Mvar]	Load [MW]/ [Mvar]	Compen-sation [MW]/ [Mvar]	External Infeed [MW]/ [Mvar]	Interchange to	Power Interchange [MW]/ [Mvar]	Total Losses [MW]/ [Mvar]	Load Losses [MW]/ [Mvar]	Noload Losses [MW]/ [Mvar]
0.40	4.17	0.00	0.00	0.00	0.00			0.00	0.00	0.00
	2.11	0.00	0.00	0.00	0.00			0.00	0.00	0.00
						20.00 kV	4.17	0.04	0.04	0.00
							2.11	0.18	0.18	0.00
20.00	0.00	0.00	3.49	0.00	0.00			0.00	0.00	0.00
	0.00	0.00	1.69	0.00	0.00			0.00	0.00	0.00
						0.40 kV	-4.13	0.04	0.04	0.00
							-1.93	0.18	0.18	0.00
						Waingapu	0.53	0.00	0.00	0.00
							0.18	-0.00	0.00	-0.00
Total:	4.17	0.00	3.49	0.00	0.00		0.64	0.04	0.04	0.00
	2.11	0.00	1.69	0.00	0.00		0.24	0.18	0.18	0.00
						Waingapu	0.53	0.00	0.00	0.00
							0.18	-0.00	0.00	-0.00

DIgSILENT PowerFactory 15.2.1	Project:	Date: 4/22/2015

This report is available at no cost from the National Renewable Energy Laboratory (NREL) at www.nrel.gov/publications.

Load Flow Calculation	Complete System Report: Substations, Voltage Profiles, Grid Interchange, Area Interchange

AC Load Flow, balanced, positive sequence		Automatic Model Adaptation for Convergence	No
Automatic Tap Adjust of Transformers	Yes	Max. Acceptable Load Flow Error for	
Consider Reactive Power Limits	No	Nodes	0.01 kVA
		Model Equations	0.01 %

Area: Waingapu	Study Case: KHTL	Annex: / 9

Volt. Level [kV]	Generation [MW]/ [Mvar]	Motor Load [MW]/ [Mvar]	Load [MW]/ [Mvar]	Compen- sation [MW]/ [Mvar]	External Infeed [MW]/ [Mvar]	Interchange to	Power Interchange [MW]/ [Mvar]	Total Losses [MW]/ [Mvar]	Load Losses [MW]/ [Mvar]	Noload Losses [MW]/ [Mvar]
0.40	0.91	0.00	0.00	0.00	0.00			0.00	0.00	0.00
	0.55	0.00	0.00	0.00	0.00			0.00	0.00	0.00
						20.00 kV	0.91	0.01	0.01	0.00
							0.55	0.03	0.03	0.00
6.30	0.66	0.00	0.00	0.00	0.00			0.00	0.00	0.00
	0.33	0.00	0.00	0.00	0.00			0.00	0.00	0.00
						20.00 kV	0.66	0.01	0.01	0.00
							0.33	0.02	0.02	0.00
20.00	0.00	0.00	2.08	0.00	0.00			0.00	0.00	0.00
	0.00	0.00	1.01	0.00	0.00			0.00	0.00	0.00
						0.40 kV	-0.90	0.01	0.01	0.00
							-0.52	0.03	0.03	0.00
						6.30 kV	-0.65	0.01	0.01	0.00
							-0.31	0.02	0.02	0.00
						Kambajawa	-0.53	0.00	0.00	0.00
							-0.18	-0.00	0.00	-0.00
Total:	1.57	0.00	2.08	0.00	0.00		-0.53	0.01	0.01	0.00
	0.88	0.00	1.01	0.00	0.00		-0.18	0.05	0.05	-0.00
						Kambajawa	-0.53	0.00	0.00	0.00
							-0.18	-0.00	0.00	-0.00

	DIgSILENT PowerFactory 15.2.1	Project:
		Date: 4/22/2015

Load Flow Calculation	Complete System Report: Substations, Voltage Profiles, Grid Interchange, Area Interchange

AC Load Flow, balanced, positive sequence		Automatic Model Adaptation for Convergence	No
Automatic Tap Adjust of Transformers	Yes	Max. Acceptable Load Flow Error for	
Consider Reactive Power Limits	No	Nodes	0.01 kVA
		Model Equations	0.01 %

Area: Haharu	Study Case: KHTL	Annex: / 10

Volt.	Generation	Motor	Load	Compen-	External		Power	Total	Load	Noload

This report is available at no cost from the National Renewable Energy Laboratory (NREL) at www.nrel.gov/publications.

Level [kV]	Load [MW]/ [Mvar]	Load [MW]/ [Mvar]	sation [MW]/ [Mvar]	Infeed [MW]/ [Mvar]	Interchange to	Interchange [MW]/ [Mvar]	Losses [MW]/ [Mvar]	Losses [MW]/ [Mvar]	Losses [MW]/ [Mvar]
20.00	0.00	0.00	0.10	0.00	0.00		0.00	0.00	0.00
	0.00	0.00	0.06	0.00	0.00		0.00	0.00	0.00
Total:	0.00	0.00	0.10	0.00	0.00	-0.10	0.00	0.00	0.00
	0.00	0.00	0.06	0.00	0.00	-0.06	0.00	0.00	0.00

	DIgSILENT PowerFactory 15.2.1	Project:
		Date: 4/22/2015

Load Flow Calculation — Complete System Report: Substations, Voltage Profiles, Grid Interchange, Area Interchange

AC Load Flow, balanced, positive sequence		Automatic Model Adaptation for Convergence	No
Automatic Tap Adjust of Transformers	Yes	Max. Acceptable Load Flow Error for	
Consider Reactive Power Limits	No	Nodes	0.01 kVA
		Model Equations	0.01 %

Area Summaries — Study Case: KHTL — Annex: / 11

Generation [MW]/ [Mvar]	Motor Load [MW]/ [Mvar]	Load [MW]/ [Mvar]	Compen- sation [MW]/ [Mvar]	External Infeed [MW]/ [Mvar]	Inter Area Flow [MW]/ [Mvar]	Total Losses [MW]/ [Mvar]	Load Losses [MW]/ [Mvar]	Noload Losses [MW]/ [Mvar]
\pramod\Sumba-V3_NWHL\Network Model\Network Data\Areas\Kambajawa								
4.171	0.000	3.494	0.000	0.000	0.64	0.04	0.04	0.00
2.108	0.000	1.692	0.000	0.000	0.24	0.18	0.18	0.00
\pramod\Sumba-V3_NWHL\Network Model\Network Data\Areas\Waingapu								
1.567	0.000	2.084	0.000	0.000	-0.53	0.01	0.01	0.00
0.876	0.000	1.009	0.000	0.000	-0.18	0.05	0.05	-0.00
\pramod\Sumba-V3_NWHL\Network Model\Network Data\Areas\Haharu								
0.000	0.000	0.104	0.000	0.000	-0.10	0.00	0.00	0.00
0.000	0.000	0.064	0.000	0.000	-0.06	0.00	0.00	0.00

This report is available at no cost from the National Renewable Energy Laboratory (NREL) at www.nrel.gov/publications.

No Wind Low Load

```
-----------------------------------------------------------------------------------------------------------------------------------------
|                 |                                                                    |   DIgSILENT   | Project:                      |
|                 |                                                                    | PowerFactory  |-------------------------------
|                 |                                                                    |    15.2.1     | Date:  4/22/2015              |
-----------------------------------------------------------------------------------------------------------------------------------------
-----------------------------------------------------------------------------------------------------------------------------------------
| Load Flow Calculation                Complete System Report: Substations, Voltage Profiles, Grid Interchange, Area Interchange |
-----------------------------------------------------------------------------------------------------------------------------------------
|     AC Load Flow, balanced, positive sequence                |    Automatic Model Adaptation for Convergence            No        |
|     Automatic Tap Adjust of Transformers            Yes      |    Max. Acceptable Load Flow Error for                             |
|     Consider Reactive Power Limits                  No       |       Nodes                                              0.01 kVA  |
|                                                              |       Model Equations                                    0.01 %    |
-----------------------------------------------------------------------------------------------------------------------------------------
-----------------------------------------------------------------------------------------------------------------------------------------
| Grid: Sumba                System Stage: Sumba           | Study Case: KHTL                      | Annex:                  / 1  |
-----------------------------------------------------------------------------------------------------------------------------------------
|           rated                          Active Reactive Power                                |                                    |
|          Voltage     Bus-voltage         Power   Power   Factor Current Loading|                 Additional Data                    |
|           [kV]  [p.u.]    [kV]   [deg]   [MW]   [Mvar]    [-]    [kA]    [%]  |                                                    |
-----------------------------------------------------------------------------------------------------------------------------------------
|HB(1)                                                                            |                                                    |
|  Haharu  20.00    0.99   19.73  148.99                                          |                                                    |
|   Cub_1  /Lod      Haharu Load            0.05     0.03   0.85    0.00         |Pl0:     0.05 MW   Ql0:   0.03 Mvar                 |
|   Cub_1  /Lne      K-H2 Tline            -0.05    -0.03  -0.85    0.00    0.18 |Pv:      0.15 kW   cLod:  0.00 Mvar L:   18.00 km|
|   Cub_1  /Tr2      WTG01 Trafo            0.00     0.00   1.00    0.00    0.00 |Tap:     0.00      Min:     -2      Max:     2    |
|                                                                                 |                                                    |
|K-BB(1)                                                                          |                                                    |
|  K1 400V Bu.40    1.00    0.40    0.00                                          |                                                    |
|   Cub_1  /Sym      Volvo                  0.00     0.00   1.00    0.00    0.00 |Typ:    PQ                                          |
|   Cub_1  /Tr2      T8                     0.00     0.00   1.00    0.00    0.00 |Tap:     3.00      Min:      1      Max:     5    |
|                                                                                 |                                                    |
|K-BB(2)                                                                          |                                                    |
|  K3 400V Bu.40    1.00    0.40    0.00                                          |                                                    |
|   Cub_1  /Sym      MTU1                   0.00     0.00   1.00    0.00    0.00 |Typ:    SL                                          |
|   Cub_1  /Tr2      T6                     0.00     0.00   1.00    0.00    0.00 |Tap:     3.00      Min:      1      Max:     5    |
|                                                                                 |                                                    |
|K-BB(3)                                                                          |                                                    |
|  K4 400V Bu.40    1.07    0.43    1.13                                          |                                                    |
|   Cub_1  /Sym      DOOSAN3                0.42     0.00   1.00    0.57   80.00 |Typ:    PQ                                          |
|   Cub_1  /Sym      DOOSAN4                0.42     0.31   0.80    0.71  100.00 |Typ:    PQ                                          |
|   Cub_1  /Sym      DOOSAN5                0.42     0.31   0.80    0.71  100.00 |Typ:    PQ                                          |
|   Cub_1  /Tr2      T4                     1.26     0.63   0.89    1.91   86.45 |Tap:     1.00      Min:      1      Max:     5    |
|                    Total                -------  -------                        |                                                    |
|                    Generation:            1.26     0.63                         |                                                    |
|                                                                                 |                                                    |
-----------------------------------------------------------------------------------------------------------------------------------------
```


This report is available at no cost from the National Renewable Energy Laboratory (NREL) at www.nrel.gov/publications.

```
-----------------------------------------------------------------------------------------------------------------------------------------------------
| Grid: Sumba                System Stage: Sumba           | Study Case: KHTL                      | Annex:                   / 2  |
-----------------------------------------------------------------------------------------------------------------------------------------------------
|           rated                          Active Reactive Power                                |                                                |
|          Voltage     Bus-voltage         Power   Power   Factor Current Loading|                Additional Data                 |
|           [kV]  [p.u.]    [kV]   [deg]   [MW]   [Mvar]    [-]    [kA]    [%]  |                                                |
-----------------------------------------------------------------------------------------------------------------------------------------------------
|K-BB(4)                                                                          |                                                |
|  Kambajawa0.00    0.99   19.80  148.97                                          |                                                |
|   Cub_1  /Lod      Kambajawa Load        1.69     0.56   0.95    0.05          |Pl0:     1.69 MW   Ql0:   0.56 Mvar              |
|   Cub_1  /Lne      K-H1                  0.05     0.02   0.91    0.00    0.17  |Pv:      0.04 kW   cLod:  0.00 Mvar L:    7.00 km|
|   Cub_1  /Lne      K-W Tline             1.01     0.33   0.95    0.03    3.11  |Pv:      4.58 kW   cLod:  0.00 Mvar L:    7.00 km|
|   Cub_1  /Tr2      T1                   -0.43    -0.31  -0.81    0.02   70.60  |Tap:     3.00      Min:      1      Max:     5    |
|   Cub_1  /Tr2      T2                   -0.00     0.00  -1.00    0.00    0.00  |Tap:     5.00      Min:      1      Max:     5    |
|   Cub_1  /Tr2      T3                   -0.00     0.00  -1.00    0.00    0.00  |Tap:     3.00      Min:      1      Max:     5    |
|   Cub_1  /Tr2      T4                   -1.25    -0.57  -0.91    0.04   86.45  |Tap:     1.00      Min:      1      Max:     5    |
|   Cub_1  /Tr2      T5                   -0.84     0.02  -1.00    0.02   52.75  |Tap:     1.00      Min:      1      Max:     5    |
|   Cub_1  /Tr2      T6                   -0.00     0.00  -1.00    0.00    0.00  |Tap:     3.00      Min:      1      Max:     5    |
|   Cub_1  /Tr2      T7                   -0.25    -0.06  -0.97    0.01   41.05  |Tap:     3.00      Min:      1      Max:     5    |
|   Cub_1  /Tr2      T8                   -0.00     0.00  -1.00    0.00    0.00  |Tap:     3.00      Min:      1      Max:     5    |
|                                                                                 |                                                |
|K-BB(5)                                                                          |                                                |
|  K4 400V Bu.40    1.04    0.42    0.61                                          |                                                |
|   Cub_1  /Sym      DOOSAN1               0.42     0.00   1.00    0.58   80.00  |Typ:    PQ                                      |
|   Cub_1  /Sym      DOOSAN2               0.42     0.00   1.00    0.58   80.00  |Typ:    PQ                                      |
|   Cub_1  /Tr2      T5                    0.84     0.00   1.00    1.16   52.75  |Tap:     1.00      Min:      1      Max:     5    |
|                    Total               -------  -------                         |                                                |
|                    Generation:           0.84     0.00                          |                                                |
|                                                                                 |                                                |
|K-BB                                                                             |                                                |
|  K2 400V Bu.40    1.00    0.40    0.00                                          |                                                |
|   Cub_1  /Sym      MAN1                  0.25     0.07   0.96    0.37   48.11  |Typ:    SL                                      |
|   Cub_1  /Tr2      T7                    0.25     0.07   0.96    0.37   41.05  |Tap:     3.00      Min:      1      Max:     5    |
|                                                                                 |                                                |
|KBB10                                                                            |                                                |
|  K5 400V  0.40    1.02    0.41    0.08                                          |                                                |
|   Cub_1  /Sym      MTU2                  0.43     0.32   0.80    0.76  100.00  |Typ:    PQ                                      |
|   Cub_1  /Tr2      T1                    0.43     0.32   0.80    0.76   70.60  |Tap:     3.00      Min:      1      Max:     5    |
|                                                                                 |                                                |
|KBB11                                                                            |                                                |
|  K6 400V  0.40    1.00    0.40    0.00                                          |                                                |
|   Cub_1  /Sym      MAN2                  0.00    -0.00   1.00    0.00    0.00  |Typ:    PQ                                      |
|   Cub_1  /Tr2      T2                    0.00    -0.00   1.00    0.00    0.00  |Tap:     5.00      Min:      1      Max:     5    |
|                                                                                 |                                                |
|KBB12                                                                            |                                                |
|  K7 400V  0.40    1.00    0.40    0.00                                          |                                                |
|   Cub_1  /Sym      MTU4                  0.00     0.00   1.00    0.00    0.00  |Typ:    PQ                                      |
|   Cub_1  /Tr2      T3                    0.00     0.00   1.00    0.00    0.00  |Tap:     3.00      Min:      1      Max:     5    |
|                                                                                 |                                                |
-----------------------------------------------------------------------------------------------------------------------------------------------------
```


This report is available at no cost from the National Renewable Energy Laboratory (NREL) at www.nrel.gov/publications.

Grid: Sumba	System Stage: Sumba	Study Case: KHTL	Annex: / 3

	rated Voltage [kV]	Bus-voltage [p.u.]	Bus-voltage [kV]	Bus-voltage [deg]	Active Power [MW]	Reactive Power [Mvar]	Power Factor [-]	Current [kA]	Loading [%]	Additional Data
Single Busbar(3)										
K-H2	20.00	0.99	19.78	148.97						
Cub_1 /Lne		K-H1			-0.05	-0.03	-0.88	0.00	0.17	Pv: 0.04 kW cLod: 0.00 Mvar L: 7.00 km
Cub_1 /Lne		K-H2 Tline			0.05	0.03	0.88	0.00	0.18	Pv: 0.15 kW cLod: 0.00 Mvar L: 18.00 km
WBB(1)										
W6.3kV	6.30	0.00	0.00	0.00						
Cub_1 /Sym		SWD1			0.00	0.00	1.00	0.00	0.00	Typ: PQ
Cub_1 /Sym		SWD2			0.00	0.00	1.00	0.00	0.00	Typ: PQ
Cub_1 /Sym		SWD3								Typ: PQ
Cub_1 /Sym		YANMAR			0.00	0.00	1.00	0.00	0.00	Typ: PQ
Cub_1 /Tr2		T12			0.00	0.00	1.00	0.00	0.00	Tap: 3.00 Min: 1 Max: 5
		Total			-------	-------				
		Generation:			0.00	0.00				
WBB(2)										
W3 400V	0.40	1.00	0.40	0.00						
Cub_1 /Sym		CAT C32			0.00	0.00	1.00	0.00	0.00	Typ: PQ
Cub_1 /Tr2		T14			0.00	0.00	1.00	0.00	0.00	Tap: 3.00 Min: 1 Max: 5
WBB(3)										
Waingapu	20.00	0.98	19.68	148.73						
Cub_1 /Lod		Waingapu Load			1.01	0.33	0.95	0.03		Plo: 1.01 MW Qlo: 0.33 Mvar
Cub_1 /Lne		K-W Tline			-1.01	-0.33	-0.95	0.03	3.11	Pv: 4.58 kW cLod: 0.00 Mvar L: 7.00 km
Cub_1 /Tr2		T11			-0.00	0.00	-1.00	0.00	0.00	Tap: 3.00 Min: 1 Max: 5
Cub_1 /Tr2		T12			0.00	0.00	1.00	0.00	0.00	Tap: 3.00 Min: 1 Max: 5
Cub_1 /Tr2		T13			-0.00	0.00	-1.00	0.00	0.00	Tap: 3.00 Min: 1 Max: 5
Cub_1 /Tr2		T14			-0.00	-0.00	-1.00	0.00	0.00	Tap: 3.00 Min: 1 Max: 5
WBB(4)										
W2 400V	0.40	1.00	0.40	0.00						
Cub_1 /Sym		DEUT Z-2			0.00	-0.00	1.00	0.00	0.00	Typ: PQ
Cub_1 /Tr2		T13			0.00	0.00	1.00	0.00	0.00	Tap: 3.00 Min: 1 Max: 5
WBB										
W1 400V	0.40	1.00	0.40	0.00						
Cub_1 /Sym		DEUT Z-1			0.00	-0.00	1.00	0.00	0.00	Typ: SL
Cub_1 /Tr2		T11			0.00	0.00	1.00	0.00	0.00	Tap: 3.00 Min: 1 Max: 5
WTG01LV										
	0.69	0.00	0.00	0.00						
Cub_4 /Genstat		WTG01			0.00	0.00	1.00	0.00	0.00	
Cub_3 /Tr2		WTG01 Trafo			0.00	0.00	1.00	0.00	0.00	Tap: 0.00 Min: -2 Max: 2

DIgSILENT PowerFactory 15.2.1	Project:	Date: 4/22/2015

This report is available at no cost from the National Renewable Energy Laboratory (NREL) at www.nrel.gov/publications.

```
| Load Flow Calculation                Complete System Report: Substations, Voltage Profiles, Grid Interchange, Area Interchange |
-------------------------------------------------------------------------------------------------------------------------------------
|     AC Load Flow, balanced, positive sequence              |    Automatic Model Adaptation for Convergence            No        |
|     Automatic Tap Adjust of Transformers            Yes    |    Max. Acceptable Load Flow Error for                             |
|     Consider Reactive Power Limits                  No     |       Nodes                                          0.01 kVA  |
|                                                            |       Model Equations                                0.01 %    |
-------------------------------------------------------------------------------------------------------------------------------------
-------------------------------------------------------------------------------------------------------------------------------------
| Grid: Sumba                System Stage: Sumba           | Study Case: KHTL                      | Annex:                  / 4  |
-------------------------------------------------------------------------------------------------------------------------------------
|                      rtd.V      Bus - voltage                                          Voltage - Deviation [%]                      |
|                       [kV]  [p.u.]     [kV]  [deg]                -10         -5            0           +5         +10           |
-------------------------------------------------------------------------------------------------------------------------------------
|HB(1)                                                                                                                              |
|  Haharu             20.00   0.986    19.73 148.99                                        <<<|                                  |
|K-BB(1)                                                                                                                            |
|  K1 400V Bus         0.40   1.000     0.40   0.00                                           |                                  |
|K-BB(2)                                                                                                                            |
|  K3 400V Bus         0.40   1.000     0.40   0.00                                           |                                  |
|K-BB(3)                                                                                                                            |
|  K4 400V Bus         0.40   1.066     0.43   1.13                                           |>>>>>>>>>>>>>>>>                  |
|K-BB(4)                                                                                                                            |
|  Kambajawa          20.00   0.990    19.80 148.97                                         <<|                                  |
|K-BB(5)                                                                                                                            |
|  K4 400V Bus         0.40   1.042     0.42   0.61                                           |>>>>>>>>>>                        |
|K-BB                                                                                                                               |
|  K2 400V Bus         0.40   1.000     0.40   0.00                                           |                                  |
|KBB10                                                                                                                              |
|  K5 400V             0.40   1.015     0.41   0.08                                           |>>>>                              |
|KBB11                                                                                                                              |
|  K6 400V             0.40   1.000     0.40   0.00                                           |                                  |
|KBB12                                                                                                                              |
|  K7 400V             0.40   1.000     0.40   0.00                                           |                                  |
|Single Busbar(3)                                                                                                                   |
|  K-H2               20.00   0.989    19.78 148.97                                         <<|                                  |
|WBB(1)                                                                                                                             |
|  W6.3kV              6.30   0.000     0.00   0.00                   <\\\\\\\\\\\\\\\\\\\\\\\\|                                  |
|WBB(2)                                                                                                                             |
|  W3 400V             0.40   1.000     0.40   0.00                                           |                                  |
|WBB(3)                                                                                                                             |
|  Waingapu           20.00   0.984    19.68 148.73                                       <<<<|                                  |
|WBB(4)                                                                                                                             |
|  W2 400V             0.40   1.000     0.40   0.00                                           |                                  |
|WBB                                                                                                                                |
|  W1 400V             0.40   1.000     0.40   0.00                                           |                                  |
|WTG01LV                                                                                                                            |
-------------------------------------------------------------------------------------------------------------------------------------
-------------------------------------------------------------------------------------------------------------------------------------
| Grid: Sumba                System Stage: Sumba           | Study Case: KHTL                      | Annex:                  / 5  |
-------------------------------------------------------------------------------------------------------------------------------------
|                      rtd.V      Bus - voltage                                          Voltage - Deviation [%]                      |
|                       [kV]  [p.u.]     [kV]  [deg]                -10         -5            0           +5         +10           |
-------------------------------------------------------------------------------------------------------------------------------------
|                       0.69   0.000     0.00   0.00                   <\\\\\\\\\\\\\\\\\\\\\\\\|                                  |
-------------------------------------------------------------------------------------------------------------------------------------
-------------------------------------------------------------------------------------------------------------------------------------
|                 |                                                                  |   DIgSILENT   | Project:                  |
|                 |                                                                  | PowerFactory  |---------------------------
```


This report is available at no cost from the National Renewable Energy Laboratory (NREL) at www.nrel.gov/publications.

| | | 15.2.1 | Date: 4/22/2015 |

| Load Flow Calculation | Complete System Report: Substations, Voltage Profiles, Grid Interchange, Area Interchange |

AC Load Flow, balanced, positive sequence		Automatic Model Adaptation for Convergence	No
Automatic Tap Adjust of Transformers	Yes	Max. Acceptable Load Flow Error for	
Consider Reactive Power Limits	No	Nodes	0.01 kVA
		Model Equations	0.01 %

| Grid: Sumba | System Stage: Sumba | Study Case: KHTL | Annex: / 6 |

Volt. Level [kV]	Generation [MW]/ [Mvar]	Motor Load [MW]/ [Mvar]	Load [MW]/ [Mvar]	Compen- sation [MW]/ [Mvar]	External Infeed [MW]/ [Mvar]	Interchange to	Power Interchange [MW]/ [Mvar]	Total Losses [MW]/ [Mvar]	Load Losses [MW]/ [Mvar]	Noload Losses [MW]/ [Mvar]
0.40	2.78	0.00	0.00	0.00	0.00			0.00	0.00	0.00
	1.02	0.00	0.00	0.00	0.00			0.00	0.00	0.00
						20.00 kV	2.78	0.02	0.02	0.00
							1.02	0.11	0.11	0.00
0.69	0.00	0.00	0.00	0.00	0.00			0.00	0.00	0.00
	0.00	0.00	0.00	0.00	0.00			0.00	0.00	0.00
6.30	0.00	0.00	0.00	0.00	0.00			0.00	0.00	0.00
	0.00	0.00	0.00	0.00	0.00			0.00	0.00	0.00
20.00	0.00	0.00	2.75	0.00	0.00			0.00	0.00	0.00
	0.00	0.00	0.92	0.00	0.00			-0.01	0.01	-0.01
						0.40 kV	-2.76	0.02	0.02	0.00
							-0.91	0.11	0.11	0.00
Total:	2.78	0.00	2.75	0.00	0.00		0.00	0.03	0.03	0.00
	1.02	0.00	0.92	0.00	0.00		0.00	0.10	0.12	-0.01

		DIgSILENT PowerFactory 15.2.1	Project:
			Date: 4/22/2015

| Load Flow Calculation | Complete System Report: Substations, Voltage Profiles, Grid Interchange, Area Interchange |

AC Load Flow, balanced, positive sequence		Automatic Model Adaptation for Convergence	No
Automatic Tap Adjust of Transformers	Yes	Max. Acceptable Load Flow Error for	
Consider Reactive Power Limits	No	Nodes	0.01 kVA
		Model Equations	0.01 %

| Total System Summary | Study Case: KHTL | Annex: / 7 |

Generation [MW]/ [Mvar]	Motor Load [MW]/ [Mvar]	Load [MW]/ [Mvar]	Compen- sation [MW]/ [Mvar]	External Infeed [MW]/ [Mvar]	Inter Area Flow [MW]/ [Mvar]	Total Losses [MW]/ [Mvar]	Load Losses [MW]/ [Mvar]	Noload Losses [MW]/ [Mvar]

This report is available at no cost from the National Renewable Energy Laboratory (NREL) at www.nrel.gov/publications.

```
| \pramod\Sumba-V3_NWLL\Network Model\Network Data\Sumba                                                                                |
|            2.78      0.00      2.75      0.00      0.00                        0.00          0.03       0.03      0.00              |
|            1.02      0.00      0.92      0.00      0.00                        0.00          0.10       0.12     -0.01              |
-------------------------------------------------------------------------------------------------------------------------------------
| Total:                                                                                                                               |
|            2.78      0.00      2.75      0.00      0.00                                      0.03       0.03      0.00              |
|            1.02      0.00      0.92      0.00      0.00                                      0.10       0.12     -0.01              |
-------------------------------------------------------------------------------------------------------------------------------------
-------------------------------------------------------------------------------------------------------------------------------------
|                 |                                                                  |   DIgSILENT   | Project:                    |
|                 |                                                                  | PowerFactory  |-----------------------------
|                 |                                                                  |    15.2.1     | Date:  4/22/2015            |
-------------------------------------------------------------------------------------------------------------------------------------
-------------------------------------------------------------------------------------------------------------------------------------
| Load Flow Calculation                Complete System Report: Substations, Voltage Profiles, Grid Interchange, Area Interchange |
-------------------------------------------------------------------------------------------------------------------------------------
|     AC Load Flow, balanced, positive sequence                |    Automatic Model Adaptation for Convergence            No        |
|     Automatic Tap Adjust of Transformers            Yes      |    Max. Acceptable Load Flow Error for                             |
|     Consider Reactive Power Limits                  No       |       Nodes                                          0.01 kVA  |
|                                                              |       Model Equations                                0.01 %    |
-------------------------------------------------------------------------------------------------------------------------------------
-------------------------------------------------------------------------------------------------------------------------------------
| Area: Kambajawa                                          | Study Case: KHTL                        | Annex:                  / 8  |
-------------------------------------------------------------------------------------------------------------------------------------
|   Volt. Generation   Motor     Load     Compen-  External                      Power       Total      Load     Noload              |
|   Level               Load               sation    Infeed    Interchange     Interchange   Losses     Losses    Losses              |
|            [MW]/     [MW]/     [MW]/     [MW]/     [MW]/        to              [MW]/      [MW]/      [MW]/     [MW]/              |
|   [kV]    [Mvar]    [Mvar]    [Mvar]    [Mvar]    [Mvar]                        [Mvar]     [Mvar]     [Mvar]    [Mvar]              |
-------------------------------------------------------------------------------------------------------------------------------------
|   0.40      2.78      0.00      0.00      0.00      0.00                                    0.00       0.00      0.00              |
|             1.02      0.00      0.00      0.00      0.00                                    0.00       0.00      0.00              |
|                                                                   20.00 kV           2.78       0.02       0.02      0.00              |
|                                                                                      1.02       0.11       0.11      0.00              |
-------------------------------------------------------------------------------------------------------------------------------------
|  20.00      0.00      0.00      1.69      0.00      0.00                                    0.00       0.00      0.00              |
|             0.00      0.00      0.56      0.00      0.00                                    0.00       0.00      0.00              |
|                                                                    0.40 kV          -2.76       0.02       0.02      0.00              |
|                                                                                     -0.91       0.11       0.11      0.00              |
|                                                                    Waingapu          1.01       0.00       0.00     -0.00              |
|                                                                                      0.33       0.00       0.01     -0.00              |
-------------------------------------------------------------------------------------------------------------------------------------
| Total:      2.78      0.00      1.69      0.00      0.00                            1.06       0.02       0.02      0.00              |
|             1.02      0.00      0.56      0.00      0.00                            0.36       0.11       0.11      0.00              |
|                                                                    Waingapu          1.01       0.00       0.00     -0.00              |
|                                                                                      0.33       0.00       0.01     -0.00              |
-------------------------------------------------------------------------------------------------------------------------------------
-------------------------------------------------------------------------------------------------------------------------------------
|                 |                                                                  |   DIgSILENT   | Project:                    |
|                 |                                                                  | PowerFactory  |-----------------------------
|                 |                                                                  |    15.2.1     | Date:  4/22/2015            |
-------------------------------------------------------------------------------------------------------------------------------------
-------------------------------------------------------------------------------------------------------------------------------------
| Load Flow Calculation                Complete System Report: Substations, Voltage Profiles, Grid Interchange, Area Interchange |
-------------------------------------------------------------------------------------------------------------------------------------
|     AC Load Flow, balanced, positive sequence                |    Automatic Model Adaptation for Convergence            No        |
|     Automatic Tap Adjust of Transformers            Yes      |    Max. Acceptable Load Flow Error for                             |
|     Consider Reactive Power Limits                  No       |       Nodes                                          0.01 kVA  |
|                                                              |       Model Equations                                0.01 %    |
```


This report is available at no cost from the National Renewable Energy Laboratory (NREL) at www.nrel.gov/publications.

Area: Waingapu	Study Case: KHTL	Annex: / 9

Volt. Level [kV]	Generation [MW]/ [Mvar]	Motor Load [MW]/ [Mvar]	Load [MW]/ [Mvar]	Compen-sation [MW]/ [Mvar]	External Infeed [MW]/ [Mvar]	Interchange to	Power Interchange [MW]/ [Mvar]	Total Losses [MW]/ [Mvar]	Load Losses [MW]/ [Mvar]	Noload Losses [MW]/ [Mvar]
0.40	0.00	0.00	0.00	0.00	0.00			0.00	0.00	0.00
	0.00	0.00	0.00	0.00	0.00			0.00	0.00	0.00
6.30	0.00	0.00	0.00	0.00	0.00			0.00	0.00	0.00
	0.00	0.00	0.00	0.00	0.00			0.00	0.00	0.00
20.00	0.00	0.00	1.01	0.00	0.00			0.00	0.00	0.00
	0.00	0.00	0.33	0.00	0.00			0.00	0.00	0.00
						Kambajawa	-1.01	0.00	0.00	-0.00
							-0.33	0.00	0.01	-0.00
Total:	0.00	0.00	1.01	0.00	0.00		-1.01	0.00	0.00	-0.00
	0.00	0.00	0.33	0.00	0.00		-0.33	0.00	0.01	-0.00
						Kambajawa	-1.01	0.00	0.00	-0.00
							-0.33	0.00	0.01	-0.00

		DIgSILENT PowerFactory 15.2.1	Project:
			Date: 4/22/2015

Load Flow Calculation	Complete System Report: Substations, Voltage Profiles, Grid Interchange, Area Interchange

AC Load Flow, balanced, positive sequence		Automatic Model Adaptation for Convergence	No
Automatic Tap Adjust of Transformers	Yes	Max. Acceptable Load Flow Error for	
Consider Reactive Power Limits	No	Nodes	0.01 kVA
		Model Equations	0.01 %

Area: Haharu	Study Case: KHTL	Annex: / 10

Volt. Level [kV]	Generation [MW]/ [Mvar]	Motor Load [MW]/ [Mvar]	Load [MW]/ [Mvar]	Compen-sation [MW]/ [Mvar]	External Infeed [MW]/ [Mvar]	Interchange to	Power Interchange [MW]/ [Mvar]	Total Losses [MW]/ [Mvar]	Load Losses [MW]/ [Mvar]	Noload Losses [MW]/ [Mvar]
20.00	0.00	0.00	0.05	0.00	0.00			0.00	0.00	0.00
	0.00	0.00	0.03	0.00	0.00			0.00	0.00	0.00
Total:	0.00	0.00	0.05	0.00	0.00		-0.05	0.00	0.00	0.00
	0.00	0.00	0.03	0.00	0.00		-0.03	0.00	0.00	0.00

		DIgSILENT PowerFactory 15.2.1	Project:
			Date: 4/22/2015

This report is available at no cost from the National Renewable Energy Laboratory (NREL) at www.nrel.gov/publications.

AC Load Flow, balanced, positive sequence		Automatic Model Adaptation for Convergence	No
Automatic Tap Adjust of Transformers	Yes	Max. Acceptable Load Flow Error for	
Consider Reactive Power Limits	No	Nodes	0.01 kVA
		Model Equations	0.01 %

Area Summaries	Study Case: KHTL	Annex: / 11

	Generation [MW]/ [Mvar]	Motor Load [MW]/ [Mvar]	Load [MW]/ [Mvar]	Compen- sation [MW]/ [Mvar]	External Infeed [MW]/ [Mvar]	Inter Area Flow [MW]/ [Mvar]	Total Losses [MW]/ [Mvar]	Load Losses [MW]/ [Mvar]	Noload Losses [MW]/ [Mvar]
\pramod\Sumba-V3_NWLL\Network Model\Network Data\Areas\Kambajawa									
	2.779	0.000	1.691	0.000	0.000	1.06	0.02	0.02	0.00
	1.022	0.000	0.556	0.000	0.000	0.36	0.11	0.11	0.00
\pramod\Sumba-V3_NWLL\Network Model\Network Data\Areas\Waingapu									
	0.000	0.000	1.009	0.000	0.000	-1.01	0.00	0.00	-0.00
	0.000	0.000	0.332	0.000	0.000	-0.33	0.00	0.01	-0.00
\pramod\Sumba-V3_NWLL\Network Model\Network Data\Areas\Haharu									
	0.000	0.000	0.051	0.000	0.000	-0.05	0.00	0.00	0.00
	0.000	0.000	0.032	0.000	0.000	-0.03	0.00	0.00	0.00

This report is available at no cost from the National Renewable Energy Laboratory (NREL) at www.nrel.gov/publications.

High Wind High Load (For One WTG)

```
-----------------------------------------------------------------------------------------------------------------------------------------
|                 |                                                                    |   DIgSILENT   | Project:                      |
|                 |                                                                    | PowerFactory  |-------------------------------
|                 |                                                                    |    15.2.1     | Date:  4/22/2015              |
-----------------------------------------------------------------------------------------------------------------------------------------
-----------------------------------------------------------------------------------------------------------------------------------------
| Load Flow Calculation                 Complete System Report: Substations, Voltage Profiles, Grid Interchange, Area Interchange |
-----------------------------------------------------------------------------------------------------------------------------------------
|     AC Load Flow, balanced, positive sequence                |    Automatic Model Adaptation for Convergence            No        |
|     Automatic Tap Adjust of Transformers            Yes      |    Max. Acceptable Load Flow Error for                             |
|     Consider Reactive Power Limits                  No       |       Nodes                                              0.01 kVA  |
|                                                              |       Model Equations                                    0.01 %    |
-----------------------------------------------------------------------------------------------------------------------------------------
-----------------------------------------------------------------------------------------------------------------------------------------
| Grid: Sumba                System Stage: Sumba           | Study Case: KHTL                      | Annex:                  / 1  |
-----------------------------------------------------------------------------------------------------------------------------------------
|           rated                          Active Reactive Power                                |                                    |
|          Voltage     Bus-voltage         Power   Power   Factor Current Loading|                 Additional Data                    |
|           [kV]  [p.u.]    [kV]   [deg]   [MW]   [Mvar]    [-]    [kA]    [%]  |                                                    |
-----------------------------------------------------------------------------------------------------------------------------------------
|HB(1)                                                                            |                                                    |
|  Haharu  20.00    1.03   20.63  149.98                                          |                                                    |
|   Cub_1  /Lod      Haharu Load            0.10     0.06   0.85    0.00         |Pl0:     0.10 MW   Ql0:   0.06 Mvar                 |
|   Cub_1  /Lne      K-H2 Tline             0.74    -0.12   0.99    0.02    2.09 |Pv:     22.53 kW   cLod:  0.00 Mvar L:   18.00 km|
|   Cub_1  /Tr2      WTG01 Trafo           -0.84     0.06  -1.00    0.02   96.09 |Tap:     0.00      Min:     -2      Max:     2    |
|                                                                                 |                                                    |
|K-BB(1)                                                                          |                                                    |
|  K1 400V Bu.40    1.00    0.40   -0.15                                          |                                                    |
|   Cub_1  /Sym      Volvo                  0.22     0.17   0.80    0.40  100.00 |Typ:    PQ                                          |
|   Cub_1  /Tr2      T8                     0.22     0.17   0.80    0.40   87.14 |Tap:     4.00      Min:      1      Max:     5    |
|                                                                                 |                                                    |
|K-BB(2)                                                                          |                                                    |
|  K3 400V Bu.40    1.00    0.40    0.00                                          |                                                    |
|   Cub_1  /Sym      MTU1                   0.58     0.40   0.82    1.01   86.33 |Typ:    SL                                          |
|   Cub_1  /Tr2      T6                     0.58     0.40   0.82    1.01   70.14 |Tap:     4.00      Min:      1      Max:     5    |
|                                                                                 |                                                    |
|K-BB(3)                                                                          |                                                    |
|  K4 400V Bu.40    1.02    0.41    0.91                                          |                                                    |
|   Cub_1  /Sym      DOOSAN3                0.42     0.31   0.80    0.75  100.00 |Typ:    PQ                                          |
|   Cub_1  /Sym      DOOSAN4                0.42     0.31   0.80    0.75  100.00 |Typ:    PQ                                          |
|   Cub_1  /Sym      DOOSAN5                0.42     0.31   0.80    0.75  100.00 |Typ:    PQ                                          |
|   Cub_1  /Tr2      T4                     1.26     0.94   0.80    2.24   96.83 |Tap:     4.00      Min:      1      Max:     5    |
|                    Total                -------  -------                        |                                                    |
|                    Generation:            1.26     0.94                         |                                                    |
|                                                                                 |                                                    |
-----------------------------------------------------------------------------------------------------------------------------------------
```


This report is available at no cost from the National Renewable Energy Laboratory (NREL) at www.nrel.gov/publications.

Grid: Sumba	System Stage: Sumba	Study Case: KHTL	Annex: / 2

		rated Voltage [kV]	Bus-voltage [p.u.]	[kV]	[deg]	Active Power [MW]	Reactive Power [Mvar]	Power Factor [-]	Current [kA]	Loading [%]	Additional Data					
K-BB(4)																
Kambajawa		0.00	1.00	19.91	148.63											
Cub_1	/Lod		Kambajawa Load			3.49	1.69	0.90	0.11		Pl0:	3.49 MW	Ql0:	1.69 Mvar		
Cub_1	/Lne		K-H1			-0.71	0.13	-0.98	0.02	2.09	Pv:	6.07 kW	cLod:	0.00 Mvar	L:	7.00 km
Cub_1	/Lne		K-W Tline			1.16	0.63	0.88	0.04	3.83	Pv:	6.91 kW	cLod:	0.00 Mvar	L:	7.00 km
Cub_1	/Tr2		T1			-0.33	-0.24	-0.81	0.01	54.19	Tap:	3.00	Min:	1	Max:	5
Cub_1	/Tr2		T2			0.00	-0.00	1.00	0.00	0.00	Tap:	5.00	Min:	1	Max:	5
Cub_1	/Tr2		T3			-0.33	-0.24	-0.81	0.01	54.19	Tap:	3.00	Min:	1	Max:	5
Cub_1	/Tr2		T4			-1.24	-0.86	-0.82	0.04	96.83	Tap:	4.00	Min:	1	Max:	5
Cub_1	/Tr2		T5			-0.83	-0.28	-0.95	0.03	56.55	Tap:	4.00	Min:	1	Max:	5
Cub_1	/Tr2		T6			-0.57	-0.37	-0.84	0.02	70.14	Tap:	4.00	Min:	1	Max:	5
Cub_1	/Tr2		T7			-0.42	-0.30	-0.82	0.02	86.49	Tap:	5.00	Min:	1	Max:	5
Cub_1	/Tr2		T8			-0.22	-0.16	-0.81	0.01	87.14	Tap:	4.00	Min:	1	Max:	5
K-BB(5)																
K4 400V	Bu.40		0.99	0.40	0.33											
Cub_1	/Sym		DOOSAN1			0.42	-0.00	1.00	0.61	80.00	Typ:	PQ				
Cub_1	/Sym		DOOSAN2			0.42	0.31	0.80	0.76	100.00	Typ:	PQ				
Cub_1	/Tr2		T5			0.84	0.31	0.94	1.31	56.55	Tap:	4.00	Min:	1	Max:	5
			Total			-------	-------									
			Generation:			0.84	0.31									
K-BB																
K2 400V	Bu.40		0.99	0.39	0.27											
Cub_1	/Sym		MAN1			0.43	0.32	0.80	0.79	100.00	Typ:	PQ				
Cub_1	/Tr2		T7			0.43	0.32	0.80	0.79	86.49	Tap:	5.00	Min:	1	Max:	5
KBB10																
K5 400V		0.40	1.01	0.41	-0.52											
Cub_1	/Sym		MTU2			0.33	0.25	0.80	0.59	76.74	Typ:	PQ				
Cub_1	/Tr2		T1			0.33	0.25	0.80	0.59	54.19	Tap:	3.00	Min:	1	Max:	5
KBB11																
K6 400V		0.40	0.95	0.38	-1.37											
Cub_1	/Sym		MAN2			0.00	0.00	1.00	0.00	0.00	Typ:	PQ				
Cub_1	/Tr2		T2			-0.00	0.00	-1.00	0.00	0.00	Tap:	5.00	Min:	1	Max:	5
KBB12																
K7 400V		0.40	1.01	0.41	-0.52											
Cub_1	/Sym		MTU4			0.33	0.25	0.80	0.59	76.74	Typ:	PQ				
Cub_1	/Tr2		T3			0.33	0.25	0.80	0.59	54.19	Tap:	3.00	Min:	1	Max:	5

This report is available at no cost from the National Renewable Energy Laboratory (NREL) at www.nrel.gov/publications.

	rated Voltage [kV]	Bus-voltage [p.u.]	Bus-voltage [kV]	Bus-voltage [deg]	Active Power [MW]	Reactive Power [Mvar]	Power Factor [-]	Current [kA]	Loading [%]	Additional Data
Single Busbar(3)										
K-H2	20.00	1.00	20.06	148.98						
Cub_1 /Lne		K-H1			0.71	-0.13	0.98	0.02	2.09	Pv: 6.07 kW cLod: 0.00 Mvar L: 7.00 km
Cub_1 /Lne		K-H2 Tline			-0.71	0.13	-0.98	0.02	2.09	Pv: 22.53 kW cLod: 0.00 Mvar L: 18.00 km
WBB(1)										
W6.3kV	6.30	0.99	6.24	-1.02						
Cub_1 /Sym		SWD1			0.00	0.00	1.00	0.00	0.00	Typ: SL
Cub_1 /Sym		SWD2			0.00	0.00	1.00	0.00	0.00	Typ: SL
Cub_1 /Sym		SWD3								Typ: PQ
Cub_1 /Sym		YANMAR			0.22	0.00	1.00	0.02	80.00	Typ: PQ
Cub_1 /Tr2		T12			0.22	0.00	1.00	0.02	17.78	Tap: 3.00 Min: 1 Max: 5
		Total			-------	-------				
		Generation:			0.22	0.00				
WBB(2)										
W3 400V	0.40	1.01	0.41	-0.33						
Cub_1 /Sym		CAT C32			0.55	0.41	0.80	0.98	100.00	Typ: PQ
Cub_1 /Tr2		T14			0.55	0.41	0.80	0.98	67.81	Tap: 3.00 Min: 1 Max: 5
WBB(3)										
Waingapu	20.00	0.99	19.75	148.42						
Cub_1 /Lod		Waingapu Load			2.08	1.01	0.90	0.07		Plo: 2.08 MW Qlo: 1.01 Mvar
Cub_1 /Lne		K-W Tline			-1.15	-0.62	-0.88	0.04	3.83	Pv: 6.91 kW cLod: 0.00 Mvar L: 7.00 km
Cub_1 /Tr2		T11			0.00	-0.00	1.00	0.00	0.00	Tap: 3.00 Min: 1 Max: 5
Cub_1 /Tr2		T12			-0.22	0.00	-1.00	0.01	17.78	Tap: 3.00 Min: 1 Max: 5
Cub_1 /Tr2		T13			-0.17	0.00	-1.00	0.00	42.82	Tap: 3.00 Min: 1 Max: 5
Cub_1 /Tr2		T14			-0.54	-0.39	-0.81	0.02	67.81	Tap: 3.00 Min: 1 Max: 5
WBB(4)										
W2 400V	0.40	0.99	0.40	-0.62						
Cub_1 /Sym		DEUT Z-2			0.17	0.00	1.00	0.25	75.56	Typ: PQ
Cub_1 /Tr2		T13			0.17	0.00	1.00	0.25	42.82	Tap: 3.00 Min: 1 Max: 5
WBB										
W1 400V	0.40	0.99	0.40	-1.58						
Cub_1 /Sym		DEUT Z-1			0.00	0.00	1.00	0.00	0.00	Typ: SL
Cub_1 /Tr2		T11			-0.00	-0.00	-1.00	0.00	0.00	Tap: 3.00 Min: 1 Max: 5
WTG01LV										
	0.69	1.04	0.72	-176.87						
Cub_4 /Genstat		WTG01			0.85	0.00	1.00	0.68	100.00	
Cub_3 /Tr2		WTG01 Trafo			0.85	0.00	1.00	0.68	96.09	Tap: 0.00 Min: -2 Max: 2

This report is available at no cost from the National Renewable Energy Laboratory (NREL) at www.nrel.gov/publications.

```
| Load Flow Calculation                Complete System Report: Substations, Voltage Profiles, Grid Interchange, Area Interchange |
-------------------------------------------------------------------------------------------------------------------------------------
|     AC Load Flow, balanced, positive sequence              |    Automatic Model Adaptation for Convergence            No        |
|     Automatic Tap Adjust of Transformers            Yes    |    Max. Acceptable Load Flow Error for                             |
|     Consider Reactive Power Limits                  No     |       Nodes                                          0.01 kVA  |
|                                                            |       Model Equations                                0.01 %    |
-------------------------------------------------------------------------------------------------------------------------------------
-------------------------------------------------------------------------------------------------------------------------------------
| Grid: Sumba                System Stage: Sumba           | Study Case: KHTL                      | Annex:                  / 4  |
-------------------------------------------------------------------------------------------------------------------------------------
|                      rtd.V      Bus - voltage                                          Voltage - Deviation [%]                      |
|                       [kV]  [p.u.]     [kV]  [deg]                -10         -5            0           +5         +10            |
-------------------------------------------------------------------------------------------------------------------------------------
|HB(1)                                                                                                                              |
|  Haharu             20.00   1.032    20.63 149.98                                          |>>>>>>>>                          |
|K-BB(1)                                                                                                                            |
|  K1 400V Bus         0.40   1.002     0.40  -0.15                                          |                                  |
|K-BB(2)                                                                                                                            |
|  K3 400V Bus         0.40   1.000     0.40   0.00                                          |                                  |
|K-BB(3)                                                                                                                            |
|  K4 400V Bus         0.40   1.017     0.41   0.91                                          |>>>>                              |
|K-BB(4)                                                                                                                            |
|  Kambajawa          20.00   0.996    19.91 148.63                                         <|                                  |
|K-BB(5)                                                                                                                            |
|  K4 400V Bus         0.40   0.992     0.40   0.33                                        <<|                                  |
|K-BB                                                                                                                               |
|  K2 400V Bus         0.40   0.986     0.39   0.27                                       <<<|                                  |
|KBB10                                                                                                                              |
|  K5 400V             0.40   1.015     0.41  -0.52                                          |>>>>                              |
|KBB11                                                                                                                              |
|  K6 400V             0.40   0.953     0.38  -1.37                                <<<<<<<<<<<|                                  |
|KBB12                                                                                                                              |
|  K7 400V             0.40   1.015     0.41  -0.52                                          |>>>>                              |
|Single Busbar(3)                                                                                                                   |
|  K-H2               20.00   1.003    20.06 148.98                                          |>                                 |
|WBB(1)                                                                                                                             |
|  W6.3kV              6.30   0.990     6.24  -1.02                                        <<|                                  |
|WBB(2)                                                                                                                             |
|  W3 400V             0.40   1.014     0.41  -0.33                                          |>>>                               |
|WBB(3)                                                                                                                             |
|  Waingapu           20.00   0.988    19.75 148.42                                       <<<|                                  |
|WBB(4)                                                                                                                             |
|  W2 400V             0.40   0.993     0.40  -0.62                                        <<|                                  |
|WBB                                                                                                                                |
|  W1 400V             0.40   0.988     0.40  -1.58                                       <<<|                                  |
|WTG01LV                                                                                                                            |
-------------------------------------------------------------------------------------------------------------------------------------
-------------------------------------------------------------------------------------------------------------------------------------
| Grid: Sumba                System Stage: Sumba           | Study Case: KHTL                      | Annex:                  / 5  |
-------------------------------------------------------------------------------------------------------------------------------------
|                      rtd.V      Bus - voltage                                          Voltage - Deviation [%]                      |
|                       [kV]  [p.u.]     [kV]  [deg]                -10         -5            0           +5         +10            |
-------------------------------------------------------------------------------------------------------------------------------------
|                       0.69   1.041     0.72-176.87                                          |>>>>>>>>>>                        |
-------------------------------------------------------------------------------------------------------------------------------------
-------------------------------------------------------------------------------------------------------------------------------------
|                 |                                                                  |   DIgSILENT   | Project:                   |
|                 |                                                                  | PowerFactory  |----------------------------
```


This report is available at no cost from the National Renewable Energy Laboratory (NREL) at www.nrel.gov/publications.

Load Flow Calculation — Complete System Report: Substations, Voltage Profiles, Grid Interchange, Area Interchange

AC Load Flow, balanced, positive sequence		Automatic Model Adaptation for Convergence	No
Automatic Tap Adjust of Transformers	Yes	Max. Acceptable Load Flow Error for	
Consider Reactive Power Limits	No	Nodes	0.01 kVA
		Model Equations	0.01 %

Grid: Sumba — System Stage: Sumba — Study Case: KHTL — Annex: / 6

Volt. Level [kV]	Generation [MW]/ [Mvar]	Motor Load [MW]/ [Mvar]	Load [MW]/ [Mvar]	Compen-sation [MW]/ [Mvar]	External Infeed [MW]/ [Mvar]	Interchange to	Power Interchange [MW]/ [Mvar]	Total Losses [MW]/ [Mvar]	Load Losses [MW]/ [Mvar]	Noload Losses [MW]/ [Mvar]
0.40	4.71	0.00	0.00	0.00	0.00			0.00	0.00	0.00
	3.05	0.00	0.00	0.00	0.00			0.00	0.00	0.00
						20.00 kV	4.71	0.05	0.05	0.00
							3.05	0.22	0.22	0.00
0.69	0.85	0.00	0.00	0.00	0.00			0.00	0.00	0.00
	0.00	0.00	0.00	0.00	0.00			0.00	0.00	0.00
						20.00 kV	0.85	0.01	0.01	0.00
							0.00	0.06	0.05	0.01
6.30	0.22	0.00	0.00	0.00	0.00			0.00	0.00	0.00
	0.00	0.00	0.00	0.00	0.00			0.00	0.00	0.00
						20.00 kV	0.22	0.00	0.00	0.00
							0.00	0.00	0.00	0.00
20.00	0.00	0.00	5.68	0.00	0.00			0.04	0.04	0.00
	0.00	0.00	2.77	0.00	0.00			0.01	0.02	-0.01
						0.40 kV	-4.66	0.05	0.05	0.00
							-2.83	0.22	0.22	0.00
						0.69 kV	-0.84	0.01	0.01	0.00
							0.06	0.06	0.05	0.01
						6.30 kV	-0.22	0.00	0.00	0.00
							0.00	0.00	0.00	0.00
Total:	5.78	0.00	5.68	0.00	0.00		0.00	0.10	0.10	0.00
	3.05	0.00	2.77	0.00	0.00		0.00	0.29	0.29	-0.00

Load Flow Calculation — Complete System Report: Substations, Voltage Profiles, Grid Interchange, Area Interchange

AC Load Flow, balanced, positive sequence		Automatic Model Adaptation for Convergence	No
Automatic Tap Adjust of Transformers	Yes	Max. Acceptable Load Flow Error for	
Consider Reactive Power Limits	No	Nodes	0.01 kVA
		Model Equations	0.01 %

This report is available at no cost from the National Renewable Energy Laboratory (NREL) at www.nrel.gov/publications.

Total System Summary	Study Case: KHTL	Annex: / 7

	Generation [MW]/ [Mvar]	Motor Load [MW]/ [Mvar]	Load [MW]/ [Mvar]	Compen-sation [MW]/ [Mvar]	External Infeed [MW]/ [Mvar]	Inter Area Flow [MW]/ [Mvar]	Total Losses [MW]/ [Mvar]	Load Losses [MW]/ [Mvar]	Noload Losses [MW]/ [Mvar]
\pramod\Sumba-V3_HWHL\Network Model\Network Data\Sumba									
	5.78	0.00	5.68	0.00	0.00	0.00	0.10	0.10	0.00
	3.05	0.00	2.77	0.00	0.00	0.00	0.29	0.29	-0.00
Total:									
	5.78	0.00	5.68	0.00	0.00		0.10	0.10	0.00
	3.05	0.00	2.77	0.00	0.00		0.29	0.29	-0.00

DIgSILENT PowerFactory 15.2.1	Project:
	Date: 4/22/2015

Load Flow Calculation	Complete System Report: Substations, Voltage Profiles, Grid Interchange, Area Interchange

AC Load Flow, balanced, positive sequence		Automatic Model Adaptation for Convergence	No
Automatic Tap Adjust of Transformers	Yes	Max. Acceptable Load Flow Error for	
Consider Reactive Power Limits	No	Nodes	0.01 kVA
		Model Equations	0.01 %

Area: Kambajawa	Study Case: KHTL	Annex: / 8

Volt. Level [kV]	Generation [MW]/ [Mvar]	Motor Load [MW]/ [Mvar]	Load [MW]/ [Mvar]	Compen-sation [MW]/ [Mvar]	External Infeed [MW]/ [Mvar]	Interchange to	Power Interchange [MW]/ [Mvar]	Total Losses [MW]/ [Mvar]	Load Losses [MW]/ [Mvar]	Noload Losses [MW]/ [Mvar]
0.40	3.99	0.00	0.00	0.00	0.00			0.00	0.00	0.00
	2.64	0.00	0.00	0.00	0.00			0.00	0.00	0.00
						20.00 kV	3.99	0.04	0.04	0.00
							2.64	0.19	0.19	0.00
20.00	0.00	0.00	3.49	0.00	0.00			0.00	0.00	0.00
	0.00	0.00	1.69	0.00	0.00			0.00	0.00	0.00
						0.40 kV	-3.94	0.04	0.04	0.00
							-2.45	0.19	0.19	0.00
						Waingapu	1.16	0.01	0.01	0.00
							0.63	0.00	0.01	-0.00
Total:	3.99	0.00	3.49	0.00	0.00		0.45	0.04	0.04	0.00
	2.64	0.00	1.69	0.00	0.00		0.75	0.19	0.19	0.00
						Waingapu	1.16	0.01	0.01	0.00
							0.63	0.00	0.01	-0.00

DIgSILENT PowerFactory 15.2.1	Project:
	Date: 4/22/2015

This report is available at no cost from the National Renewable Energy Laboratory (NREL) at www.nrel.gov/publications.

Load Flow Calculation	Complete System Report: Substations, Voltage Profiles, Grid Interchange, Area Interchange

AC Load Flow, balanced, positive sequence		Automatic Model Adaptation for Convergence	No
Automatic Tap Adjust of Transformers	Yes	Max. Acceptable Load Flow Error for	
Consider Reactive Power Limits	No	Nodes	0.01 kVA
		Model Equations	0.01 %

Area: Waingapu	Study Case: KHTL	Annex: / 9

Volt. Level [kV]	Generation [MW]/ [Mvar]	Motor Load [MW]/ [Mvar]	Load [MW]/ [Mvar]	Compen-sation [MW]/ [Mvar]	External Infeed [MW]/ [Mvar]	Interchange to	Power Interchange [MW]/ [Mvar]	Total Losses [MW]/ [Mvar]	Load Losses [MW]/ [Mvar]	Noload Losses [MW]/ [Mvar]
0.40	0.72	0.00	0.00	0.00	0.00			0.00	0.00	0.00
	0.41	0.00	0.00	0.00	0.00			0.00	0.00	0.00
						20.00 kV	0.72	0.01	0.01	0.00
							0.41	0.03	0.03	0.00
6.30	0.22	0.00	0.00	0.00	0.00			0.00	0.00	0.00
	0.00	0.00	0.00	0.00	0.00			0.00	0.00	0.00
						20.00 kV	0.22	0.00	0.00	0.00
							0.00	0.00	0.00	0.00
20.00	0.00	0.00	2.08	0.00	0.00			0.00	0.00	0.00
	0.00	0.00	1.01	0.00	0.00			0.00	0.00	0.00
						0.40 kV	-0.71	0.01	0.01	0.00
							-0.39	0.03	0.03	0.00
						6.30 kV	-0.22	0.00	0.00	0.00
							0.00	0.00	0.00	0.00
						Kambajawa	-1.16	0.01	0.01	0.00
							-0.63	0.00	0.01	-0.00
Total:	0.94	0.00	2.08	0.00	0.00		-1.16	0.01	0.01	0.00
	0.41	0.00	1.01	0.00	0.00		-0.63	0.03	0.04	-0.00
						Kambajawa	-1.16	0.01	0.01	0.00
							-0.63	0.00	0.01	-0.00

	DIgSILENT PowerFactory 15.2.1	Project:
		Date: 4/22/2015

Load Flow Calculation	Complete System Report: Substations, Voltage Profiles, Grid Interchange, Area Interchange

AC Load Flow, balanced, positive sequence		Automatic Model Adaptation for Convergence	No
Automatic Tap Adjust of Transformers	Yes	Max. Acceptable Load Flow Error for	
Consider Reactive Power Limits	No	Nodes	0.01 kVA
		Model Equations	0.01 %

Area: Haharu	Study Case: KHTL	Annex: / 10

Volt.	Generation	Motor	Load	Compen-	External	Power	Total	Load	Noload

This report is available at no cost from the National Renewable Energy Laboratory (NREL) at www.nrel.gov/publications.

Level [kV]	Load [MW]/ [Mvar]	Load [MW]/ [Mvar]	sation [MW]/ [Mvar]	Infeed [MW]/ [Mvar]	Interchange to	Interchange [MW]/ [Mvar]	Losses [MW]/ [Mvar]	Losses [MW]/ [Mvar]	Losses [MW]/ [Mvar]
20.00	0.00	0.00	0.10	0.00	0.00		0.00	0.00	0.00
	0.00	0.00	0.06	0.00	0.00		0.00	0.00	0.00
					0.69 kV	-0.84	0.01	0.01	0.00
						0.06	0.06	0.05	0.01
Total:	0.00	0.00	0.10	0.00	0.00	-0.11	0.01	0.01	0.00
	0.00	0.00	0.06	0.00	0.00	-0.12	0.06	0.05	0.01

	DIgSILENT PowerFactory 15.2.1	Project:
		Date: 4/22/2015

Load Flow Calculation — Complete System Report: Substations, Voltage Profiles, Grid Interchange, Area Interchange

AC Load Flow, balanced, positive sequence		Automatic Model Adaptation for Convergence	No
Automatic Tap Adjust of Transformers	Yes	Max. Acceptable Load Flow Error for	
Consider Reactive Power Limits	No	Nodes	0.01 kVA
		Model Equations	0.01 %

Area Summaries — Study Case: KHTL — Annex: / 11

Generation [MW]/ [Mvar]	Motor Load [MW]/ [Mvar]	Load [MW]/ [Mvar]	Compen- sation [MW]/ [Mvar]	External Infeed [MW]/ [Mvar]	Inter Area Flow [MW]/ [Mvar]	Total Losses [MW]/ [Mvar]	Load Losses [MW]/ [Mvar]	Noload Losses [MW]/ [Mvar]
\pramod\Sumba-V3_HWHL\Network Model\Network Data\Areas\Kambajawa								
3.988	0.000	3.494	0.000	0.000	0.45	0.04	0.04	0.00
2.640	0.000	1.692	0.000	0.000	0.75	0.19	0.19	0.00
\pramod\Sumba-V3_HWHL\Network Model\Network Data\Areas\Waingapu								
0.940	0.000	2.084	0.000	0.000	-1.16	0.01	0.01	0.00
0.412	0.000	1.009	0.000	0.000	-0.63	0.03	0.04	-0.00
\pramod\Sumba-V3_HWHL\Network Model\Network Data\Areas\Haharu								
0.000	0.000	0.104	0.000	0.000	-0.11	0.01	0.01	0.00
0.000	0.000	0.064	0.000	0.000	-0.12	0.06	0.05	0.01

This report is available at no cost from the National Renewable Energy Laboratory (NREL) at www.nrel.gov/publications.

High Wind Low Load (For One WTG)

```
-----------------------------------------------------------------------------------------------------------------------------------------------
|                 |                                                                    |   DIgSILENT   | Project:                      |
|                 |                                                                    | PowerFactory  |-------------------------------
|                 |                                                                    |    15.2.1     | Date:  4/22/2015              |
-----------------------------------------------------------------------------------------------------------------------------------------------
-----------------------------------------------------------------------------------------------------------------------------------------------
| Load Flow Calculation                 Complete System Report: Substations, Voltage Profiles, Grid Interchange, Area Interchange |
-----------------------------------------------------------------------------------------------------------------------------------------------
|     AC Load Flow, balanced, positive sequence                |    Automatic Model Adaptation for Convergence            No         |
|     Automatic Tap Adjust of Transformers            Yes      |    Max. Acceptable Load Flow Error for                                |
|     Consider Reactive Power Limits                  No       |       Nodes                                              0.01 kVA   |
|                                                              |       Model Equations                                    0.01 %     |
-----------------------------------------------------------------------------------------------------------------------------------------------
-----------------------------------------------------------------------------------------------------------------------------------------------
| Grid: Sumba                System Stage: Sumba           | Study Case: KHTL                      | Annex:                  / 1  |
-----------------------------------------------------------------------------------------------------------------------------------------------
|           rated                          Active Reactive Power                                |                                       |
|          Voltage     Bus-voltage         Power   Power   Factor Current Loading|                 Additional Data                       |
|           [kV]  [p.u.]    [kV]   [deg]   [MW]   [Mvar]    [-]    [kA]    [%]  |                                                       |
-----------------------------------------------------------------------------------------------------------------------------------------------
|HB(1)                                                                            |                                                       |
|  Haharu  20.00    1.04   20.79  150.00                                          |                                                       |
|   Cub_1  /Lod      Haharu Load            0.05     0.03   0.85    0.00         |Pl0:     0.05 MW   Ql0:   0.03 Mvar                    |
|   Cub_1  /Lne      K-H2 Tline             0.79    -0.08   1.00    0.02    2.22 |Pv:     25.40 kW   cLod:  0.00 Mvar L:   18.00 km|
|   Cub_1  /Tr2      WTG01 Trafo           -0.85     0.05  -1.00    0.02   44.03 |Tap:     0.00      Min:     -2      Max:     2    |
|                                                                                 |                                                       |
|K-BB(1)                                                                          |                                                       |
|  K1 400V Bu.40    1.00    0.40    0.00                                          |                                                       |
|   Cub_1  /Sym      Volvo                  0.00     0.00   1.00    0.00    0.00 |Typ:    PQ                                             |
|   Cub_1  /Tr2      T8                     0.00     0.00   1.00    0.00    0.00 |Tap:     3.00      Min:      1      Max:     5    |
|                                                                                 |                                                       |
|K-BB(2)                                                                          |                                                       |
|  K3 400V Bu.40    1.00    0.40    0.00                                          |                                                       |
|   Cub_1  /Sym      MTU1                   0.00     0.00   1.00    0.00    0.00 |Typ:    PQ                                             |
|   Cub_1  /Tr2      T6                     0.00     0.00   1.00    0.00    0.00 |Tap:     3.00      Min:      1      Max:     5    |
|                                                                                 |                                                       |
|K-BB(3)                                                                          |                                                       |
|  K4 400V Bu.40    1.00    0.40    0.00                                          |                                                       |
|   Cub_1  /Sym      DOOSAN3                0.42     0.26   0.85    0.71   94.12 |Typ:    PQ                                             |
|   Cub_1  /Sym      DOOSAN4                0.42     0.26   0.85    0.71   94.12 |Typ:    PQ                                             |
|   Cub_1  /Sym      DOOSAN5                0.27     0.25   0.74    0.54   70.63 |Typ:    SL                                             |
|   Cub_1  /Tr2      T4                     1.11     0.77   0.82    1.95   52.09 |Tap:     4.00      Min:      1      Max:     5    |
|                    Total               -------  -------                         |                                                       |
|                    Generation:            1.11     0.77                        |                                                       |
|                                                                                 |                                                       |
-----------------------------------------------------------------------------------------------------------------------------------------------
```


This report is available at no cost from the National Renewable Energy Laboratory (NREL) at www.nrel.gov/publications.

```
-----------------------------------------------------------------------------------------------------------------------------------------------------
| Grid: Sumba                System Stage: Sumba           | Study Case: KHTL                      | Annex:                   / 2  |
-----------------------------------------------------------------------------------------------------------------------------------------------------
|           rated                          Active Reactive Power                                |                                                |
|          Voltage     Bus-voltage         Power   Power   Factor Current Loading|                Additional Data                 |
|           [kV]  [p.u.]    [kV]   [deg]   [MW]   [Mvar]    [-]    [kA]    [%]  |                                                |
-----------------------------------------------------------------------------------------------------------------------------------------------------
|K-BB(4)                                                                          |                                                |
|  Kambajawa0.00    1.00   19.99  148.73                                          |                                                |
|   Cub_1  /Lod      Kambajawa Load        1.69     0.56   0.95    0.05          |Pl0:     1.69 MW   Ql0:   0.56 Mvar              |
|   Cub_1  /Lne      K-H1                 -0.76     0.08  -0.99    0.02    2.22  |Pv:      6.85 kW   cLod:  0.00 Mvar L:    7.00 km|
|   Cub_1  /Lne      K-W Tline             1.01     0.33   0.95    0.03    3.08  |Pv:      4.49 kW   cLod:  0.00 Mvar L:    7.00 km|
|   Cub_1  /Tr2      T1                   -0.00     0.00  -1.00    0.00    0.00  |Tap:     3.00      Min:      1      Max:     5    |
|   Cub_1  /Tr2      T2                   -0.00    -0.00  -1.00    0.00    0.00  |Tap:     5.00      Min:      1      Max:     5    |
|   Cub_1  /Tr2      T3                   -0.00     0.00  -1.00    0.00    0.00  |Tap:     3.00      Min:      1      Max:     5    |
|   Cub_1  /Tr2      T4                   -1.11    -0.73  -0.83    0.04   52.09  |Tap:     4.00      Min:      1      Max:     5    |
|   Cub_1  /Tr2      T5                   -0.84    -0.24  -0.96    0.03   34.25  |Tap:     4.00      Min:      1      Max:     5    |
|   Cub_1  /Tr2      T6                   -0.00     0.00  -1.00    0.00    0.00  |Tap:     3.00      Min:      1      Max:     5    |
|   Cub_1  /Tr2      T7                   -0.00    -0.00  -1.00    0.00    0.00  |Tap:     3.00      Min:      1      Max:     5    |
|   Cub_1  /Tr2      T8                   -0.00     0.00  -1.00    0.00    0.00  |Tap:     3.00      Min:      1      Max:     5    |
|                                                                                 |                                                |
|K-BB(5)                                                                          |                                                |
|  K4 400V Bu.40    0.99    0.39   -0.21                                          |                                                |
|   Cub_1  /Sym      DOOSAN1               0.42    -0.00   1.00    0.61   80.00  |Typ:    PQ                                      |
|   Cub_1  /Sym      DOOSAN2               0.42     0.26   0.85    0.72   94.12  |Typ:    PQ                                      |
|   Cub_1  /Tr2      T5                    0.84     0.26   0.96    1.29   34.25  |Tap:     4.00      Min:      1      Max:     5    |
|                    Total               -------  -------                         |                                                |
|                    Generation:           0.84     0.26                          |                                                |
|                                                                                 |                                                |
|K-BB                                                                             |                                                |
|  K2 400V Bu.40    1.00    0.40    0.00                                          |                                                |
|   Cub_1  /Sym      MAN1                  0.00     0.00   1.00    0.00    0.00  |Typ:    PQ                                      |
|   Cub_1  /Tr2      T7                    0.00     0.00   1.00    0.00    0.00  |Tap:     3.00      Min:      1      Max:     5    |
|                                                                                 |                                                |
|KBB10                                                                            |                                                |
|  K5 400V  0.40    1.00    0.40    0.00                                          |                                                |
|   Cub_1  /Sym      MTU2                  0.00     0.00   1.00    0.00    0.00  |Typ:    PQ                                      |
|   Cub_1  /Tr2      T1                    0.00     0.00   1.00    0.00    0.00  |Tap:     3.00      Min:      1      Max:     5    |
|                                                                                 |                                                |
|KBB11                                                                            |                                                |
|  K6 400V  0.40    1.00    0.40    0.00                                          |                                                |
|   Cub_1  /Sym      MAN2                  0.00    -0.00   1.00    0.00    0.00  |Typ:    PQ                                      |
|   Cub_1  /Tr2      T2                    0.00     0.00   1.00    0.00    0.00  |Tap:     5.00      Min:      1      Max:     5    |
|                                                                                 |                                                |
|KBB12                                                                            |                                                |
|  K7 400V  0.40    1.00    0.40    0.00                                          |                                                |
|   Cub_1  /Sym      MTU4                  0.00     0.00   1.00    0.00    0.00  |Typ:    PQ                                      |
|   Cub_1  /Tr2      T3                    0.00     0.00   1.00    0.00    0.00  |Tap:     3.00      Min:      1      Max:     5    |
|                                                                                 |                                                |
-----------------------------------------------------------------------------------------------------------------------------------------------------
```


This report is available at no cost from the National Renewable Energy Laboratory (NREL) at www.nrel.gov/publications.

```
-----------------------------------------------------------------------------------------------------------------------------------------
| Grid: Sumba                System Stage: Sumba           | Study Case: KHTL                      | Annex:                  / 3  |
-----------------------------------------------------------------------------------------------------------------------------------------
|           rated                          Active Reactive Power                                |                                      |
|          Voltage     Bus-voltage         Power   Power   Factor Current Loading|                Additional Data                       |
|           [kV]  [p.u.]    [kV]   [deg]   [MW]   [Mvar]    [-]    [kA]    [%]  |                                                      |
-----------------------------------------------------------------------------------------------------------------------------------------
|Single Busbar(3)                                                                |                                                      |
|  K-H2    20.00    1.01   20.16  149.07                                         |                                                      |
|   Cub_1  /Lne      K-H1                  0.77    -0.08   0.99    0.02    2.22  |Pv:      6.85 kW   cLod:  0.00 Mvar L:    7.00 km|
|   Cub_1  /Lne      K-H2 Tline           -0.77     0.08  -0.99    0.02    2.22  |Pv:     25.40 kW   cLod:  0.00 Mvar L:   18.00 km|
|                                                                                |                                                      |
|WBB(1)                                                                          |                                                      |
|  W6.3kV   6.30    0.00    0.00    0.00                                         |                                                      |
|   Cub_1  /Sym      SWD1                  0.00     0.00   1.00    0.00    0.00  |Typ:    PQ                                            |
|   Cub_1  /Sym      SWD2                  0.00     0.00   1.00    0.00    0.00  |Typ:    PQ                                            |
|   Cub_1  /Sym      SWD3                                                        |Typ:    PQ                                            |
|   Cub_1  /Sym      YANMAR                0.00     0.00   1.00    0.00    0.00  |Typ:    PQ                                            |
|   Cub_1  /Tr2      T12                   0.00     0.00   1.00    0.00    0.00  |Tap:     3.00      Min:      1      Max:     5    |
|                    Total               -------  -------                         |                                                      |
|                    Generation:           0.00     0.00                         |                                                      |
|                                                                                |                                                      |
|WBB(2)                                                                          |                                                      |
|  W3 400V  0.40    1.00    0.40    0.00                                         |                                                      |
|   Cub_1  /Sym      CAT C32               0.00     0.00   1.00    0.00    0.00  |Typ:    PQ                                            |
|   Cub_1  /Tr2      T14                   0.00     0.00   1.00    0.00    0.00  |Tap:     3.00      Min:      1      Max:     5    |
|                                                                                |                                                      |
|WBB(3)                                                                          |                                                      |
|  Waingapu20.00    0.99   19.87  148.50                                         |                                                      |
|   Cub_1  /Lod      Waingapu Load         1.01     0.33   0.95    0.03         |Pl0:     1.01 MW   Ql0:   0.33 Mvar                           |
|   Cub_1  /Lne      K-W Tline            -1.01    -0.33  -0.95    0.03    3.08  |Pv:      4.49 kW   cLod:  0.00 Mvar L:    7.00 km|
|   Cub_1  /Tr2      T11                  -0.00     0.00  -1.00    0.00    0.00  |Tap:     3.00      Min:      1      Max:     5    |
|   Cub_1  /Tr2      T12                   0.00     0.00   1.00    0.00    0.00  |Tap:     3.00      Min:      1      Max:     5    |
|   Cub_1  /Tr2      T13                  -0.00     0.00  -1.00    0.00    0.00  |Tap:     3.00      Min:      1      Max:     5    |
|   Cub_1  /Tr2      T14                  -0.00    -0.00  -1.00    0.00    0.00  |Tap:     3.00      Min:      1      Max:     5    |
|                                                                                |                                                      |
|WBB(4)                                                                          |                                                      |
|  W2 400V  0.40    1.00    0.40    0.00                                         |                                                      |
|   Cub_1  /Sym      DEUT Z-2              0.00    -0.00   1.00    0.00    0.00  |Typ:    PQ                                            |
|   Cub_1  /Tr2      T13                   0.00     0.00   1.00    0.00    0.00  |Tap:     3.00      Min:      1      Max:     5    |
|                                                                                |                                                      |
|WBB                                                                             |                                                      |
|  W1 400V  0.40    1.00    0.40    0.00                                         |                                                      |
|   Cub_1  /Sym      DEUT Z-1              0.00    -0.00   1.00    0.00    0.00  |Typ:    PQ                                            |
|   Cub_1  /Tr2      T11                   0.00     0.00   1.00    0.00    0.00  |Tap:     3.00      Min:      1      Max:     5    |
|                                                                                |                                                      |
|WTG01LV                                                                         |                                                      |
|           0.69    1.04    0.72 -178.56                                         |                                                      |
|   Cub_4  /Genstat  WTG01                 0.85     0.00   1.00    0.68  100.00  |                                                      |
|   Cub_3  /Tr2      WTG01 Trafo           0.85     0.00   1.00    0.68   44.03 |Tap:     0.00      Min:     -2      Max:     2    |
|                                                                                |                                                      |
-----------------------------------------------------------------------------------------------------------------------------------------
-----------------------------------------------------------------------------------------------------------------------------------------
|                 |                                                          |   DIgSILENT   | Project:                      |
|                 |                                                          | PowerFactory  |-------------------------------
|                 |                                                          |    15.2.1     | Date:  4/22/2015              |
-----------------------------------------------------------------------------------------------------------------------------------------
-----------------------------------------------------------------------------------------------------------------------------------------
```


This report is available at no cost from the National Renewable Energy Laboratory (NREL) at www.nrel.gov/publications.

```
| Load Flow Calculation                Complete System Report: Substations, Voltage Profiles, Grid Interchange, Area Interchange |
-------------------------------------------------------------------------------------------------------------------------------------
|     AC Load Flow, balanced, positive sequence              |    Automatic Model Adaptation for Convergence            No        |
|     Automatic Tap Adjust of Transformers            Yes    |    Max. Acceptable Load Flow Error for                             |
|     Consider Reactive Power Limits                  No     |       Nodes                                          0.01 kVA  |
|                                                            |       Model Equations                                0.01 %    |
-------------------------------------------------------------------------------------------------------------------------------------
-------------------------------------------------------------------------------------------------------------------------------------
| Grid: Sumba                System Stage: Sumba           | Study Case: KHTL                      | Annex:                  / 4  |
-------------------------------------------------------------------------------------------------------------------------------------
|                      rtd.V      Bus - voltage                                          Voltage - Deviation [%]                      |
|                       [kV]  [p.u.]     [kV]  [deg]                -10         -5            0           +5         +10           |
-------------------------------------------------------------------------------------------------------------------------------------
|HB(1)                                                                                                                              |
|  Haharu             20.00   1.039    20.79 150.00                                          |>>>>>>>>>                          |
|K-BB(1)                                                                                                                            |
|  K1 400V Bus         0.40   1.000     0.40   0.00                                          |                                   |
|K-BB(2)                                                                                                                            |
|  K3 400V Bus         0.40   1.000     0.40   0.00                                          |                                   |
|K-BB(3)                                                                                                                            |
|  K4 400V Bus         0.40   1.000     0.40   0.00                                          |                                   |
|K-BB(4)                                                                                                                            |
|  Kambajawa          20.00   0.999    19.99 148.73                                          |                                   |
|K-BB(5)                                                                                                                            |
|  K4 400V Bus         0.40   0.987     0.39  -0.21                                       <<<|                                   |
|K-BB                                                                                                                               |
|  K2 400V Bus         0.40   1.000     0.40   0.00                                          |                                   |
|KBB10                                                                                                                              |
|  K5 400V             0.40   1.000     0.40   0.00                                          |                                   |
|KBB11                                                                                                                              |
|  K6 400V             0.40   1.000     0.40   0.00                                          |                                   |
|KBB12                                                                                                                              |
|  K7 400V             0.40   1.000     0.40   0.00                                          |                                   |
|Single Busbar(3)                                                                                                                   |
|  K-H2               20.00   1.008    20.16 149.07                                          |>>                                 |
|WBB(1)                                                                                                                             |
|  W6.3kV              6.30   0.000     0.00   0.00                   <\\\\\\\\\\\\\\\\\\\\\\\\|                                   |
|WBB(2)                                                                                                                             |
|  W3 400V             0.40   1.000     0.40   0.00                                          |                                   |
|WBB(3)                                                                                                                             |
|  Waingapu           20.00   0.994    19.87 148.50                                        <|                                   |
|WBB(4)                                                                                                                             |
|  W2 400V             0.40   1.000     0.40   0.00                                          |                                   |
|WBB                                                                                                                                |
|  W1 400V             0.40   1.000     0.40   0.00                                          |                                   |
|WTG01LV                                                                                                                            |
-------------------------------------------------------------------------------------------------------------------------------------
-------------------------------------------------------------------------------------------------------------------------------------
| Grid: Sumba                System Stage: Sumba           | Study Case: KHTL                      | Annex:                  / 5  |
-------------------------------------------------------------------------------------------------------------------------------------
|                      rtd.V      Bus - voltage                                          Voltage - Deviation [%]                      |
|                       [kV]  [p.u.]     [kV]  [deg]                -10         -5            0           +5         +10           |
-------------------------------------------------------------------------------------------------------------------------------------
|                       0.69   1.043     0.72-178.56                                          |>>>>>>>>>>                         |
-------------------------------------------------------------------------------------------------------------------------------------
-------------------------------------------------------------------------------------------------------------------------------------
|                 |                                                                  |   DIgSILENT   | Project:                  |
|                 |                                                                  | PowerFactory  |---------------------------
```


This report is available at no cost from the National Renewable Energy Laboratory (NREL) at www.nrel.gov/publications.

| | | 15.2.1 | Date: 4/22/2015 |

| Load Flow Calculation | Complete System Report: Substations, Voltage Profiles, Grid Interchange, Area Interchange |

AC Load Flow, balanced, positive sequence		Automatic Model Adaptation for Convergence	No
Automatic Tap Adjust of Transformers	Yes	Max. Acceptable Load Flow Error for	
Consider Reactive Power Limits	No	Nodes	0.01 kVA
		Model Equations	0.01 %

| Grid: Sumba | System Stage: Sumba | Study Case: KHTL | Annex: / 6 |

Volt. Level [kV]	Generation [MW]/ [Mvar]	Motor Load [MW]/ [Mvar]	Load [MW]/ [Mvar]	Compen-sation [MW]/ [Mvar]	External Infeed [MW]/ [Mvar]	Interchange to	Power Interchange [MW]/ [Mvar]	Total Losses [MW]/ [Mvar]	Load Losses [MW]/ [Mvar]	Noload Losses [MW]/ [Mvar]
0.40	1.95	0.00	0.00	0.00	0.00			0.00	0.00	0.00
	1.03	0.00	0.00	0.00	0.00			0.00	0.00	0.00
						20.00 kV	1.95	0.01	0.01	0.00
							1.03	0.06	0.06	0.00
0.69	0.85	0.00	0.00	0.00	0.00			0.00	0.00	0.00
	0.00	0.00	0.00	0.00	0.00			0.00	0.00	0.00
						20.00 kV	0.85	0.00	0.00	0.00
							0.00	0.05	0.02	0.02
6.30	0.00	0.00	0.00	0.00	0.00			0.00	0.00	0.00
	0.00	0.00	0.00	0.00	0.00			0.00	0.00	0.00
20.00	0.00	0.00	2.75	0.00	0.00			0.04	0.04	-0.00
	0.00	0.00	0.92	0.00	0.00			0.01	0.02	-0.01
						0.40 kV	-1.94	0.01	0.01	0.00
							-0.97	0.06	0.06	0.00
						0.69 kV	-0.85	0.00	0.00	0.00
							0.05	0.05	0.02	0.02
Total:	2.80	0.00	2.75	0.00	0.00		0.00	0.05	0.05	0.00
	1.03	0.00	0.92	0.00	0.00		0.00	0.11	0.10	0.01

		DIgSILENT PowerFactory 15.2.1	Project:
			Date: 4/22/2015

| Load Flow Calculation | Complete System Report: Substations, Voltage Profiles, Grid Interchange, Area Interchange |

AC Load Flow, balanced, positive sequence		Automatic Model Adaptation for Convergence	No
Automatic Tap Adjust of Transformers	Yes	Max. Acceptable Load Flow Error for	
Consider Reactive Power Limits	No	Nodes	0.01 kVA
		Model Equations	0.01 %

| Total System Summary | Study Case: KHTL | Annex: / 7 |

Generation	Motor	Load	Compen-	External	Inter Area	Total	Load	Noload

This report is available at no cost from the National Renewable Energy Laboratory (NREL) at www.nrel.gov/publications.

	Load [MW]/ [Mvar]	Load [MW]/ [Mvar]	sation [MW]/ [Mvar]	Infeed [MW]/ [Mvar]	Flow [MW]/ [Mvar]	Losses [MW]/ [Mvar]	Losses [MW]/ [Mvar]	Losses [MW]/ [Mvar]
\pramod\Sumba-V3_HWLL\Network Model\Network Data\Sumba								
	2.80	0.00	2.75	0.00	0.00	0.00	0.05	0.05	0.00
	1.03	0.00	0.92	0.00	0.00	0.00	0.11	0.10	0.01
Total:									
	2.80	0.00	2.75	0.00	0.00		0.05	0.05	0.00
	1.03	0.00	0.92	0.00	0.00		0.11	0.10	0.01

	DIgSILENT PowerFactory 15.2.1	Project:
		Date: 4/22/2015

Load Flow Calculation — Complete System Report: Substations, Voltage Profiles, Grid Interchange, Area Interchange

AC Load Flow, balanced, positive sequence		Automatic Model Adaptation for Convergence	No
Automatic Tap Adjust of Transformers	Yes	Max. Acceptable Load Flow Error for	
Consider Reactive Power Limits	No	Nodes	0.01 kVA
		Model Equations	0.01 %

Area: Kambajawa | Study Case: KHTL | Annex: / 8

Volt. Level [kV]	Generation [MW]/ [Mvar]	Motor Load [MW]/ [Mvar]	Load [MW]/ [Mvar]	Compen- sation [MW]/ [Mvar]	External Infeed [MW]/ [Mvar]	Interchange to	Power Interchange [MW]/ [Mvar]	Total Losses [MW]/ [Mvar]	Load Losses [MW]/ [Mvar]	Noload Losses [MW]/ [Mvar]
0.40	1.95	0.00	0.00	0.00	0.00			0.00	0.00	0.00
	1.03	0.00	0.00	0.00	0.00			0.00	0.00	0.00
						20.00 kV	1.95	0.01	0.01	0.00
							1.03	0.06	0.06	0.00
20.00	0.00	0.00	1.69	0.00	0.00			0.00	0.00	0.00
	0.00	0.00	0.56	0.00	0.00			0.00	0.00	0.00
						0.40 kV	-1.94	0.01	0.01	0.00
							-0.97	0.06	0.06	0.00
						Waingapu	1.01	0.00	0.00	0.00
							0.33	0.00	0.01	-0.00
Total:	1.95	0.00	1.69	0.00	0.00		0.25	0.01	0.01	0.00
	1.03	0.00	0.56	0.00	0.00		0.42	0.06	0.06	0.00
						Waingapu	1.01	0.00	0.00	0.00
							0.33	0.00	0.01	-0.00

	DIgSILENT PowerFactory 15.2.1	Project:
		Date: 4/22/2015

Load Flow Calculation — Complete System Report: Substations, Voltage Profiles, Grid Interchange, Area Interchange

This report is available at no cost from the National Renewable Energy Laboratory (NREL) at www.nrel.gov/publications.

AC Load Flow, balanced, positive sequence		Automatic Model Adaptation for Convergence	No
Automatic Tap Adjust of Transformers	Yes	Max. Acceptable Load Flow Error for	
Consider Reactive Power Limits	No	Nodes	0.01 kVA
		Model Equations	0.01 %

Area: Waingapu	Study Case: KHTL	Annex: / 9

Volt. Level [kV]	Generation [MW]/ [Mvar]	Motor Load [MW]/ [Mvar]	Load [MW]/ [Mvar]	Compen-sation [MW]/ [Mvar]	External Infeed [MW]/ [Mvar]	Interchange to	Power Interchange [MW]/ [Mvar]	Total Losses [MW]/ [Mvar]	Load Losses [MW]/ [Mvar]	Noload Losses [MW]/ [Mvar]
0.40	0.00	0.00	0.00	0.00	0.00			0.00	0.00	0.00
	0.00	0.00	0.00	0.00	0.00			0.00	0.00	0.00
6.30	0.00	0.00	0.00	0.00	0.00			0.00	0.00	0.00
	0.00	0.00	0.00	0.00	0.00			0.00	0.00	0.00
20.00	0.00	0.00	1.01	0.00	0.00			0.00	0.00	0.00
	0.00	0.00	0.33	0.00	0.00			0.00	0.00	0.00
						Kambajawa	-1.01	0.00	0.00	0.00
							-0.33	0.00	0.01	-0.00
Total:	0.00	0.00	1.01	0.00	0.00		-1.01	0.00	0.00	0.00
	0.00	0.00	0.33	0.00	0.00		-0.33	0.00	0.01	-0.00
						Kambajawa	-1.01	0.00	0.00	0.00
							-0.33	0.00	0.01	-0.00

	DIgSILENT PowerFactory 15.2.1	Project:
		Date: 4/22/2015

Load Flow Calculation	Complete System Report: Substations, Voltage Profiles, Grid Interchange, Area Interchange

AC Load Flow, balanced, positive sequence		Automatic Model Adaptation for Convergence	No
Automatic Tap Adjust of Transformers	Yes	Max. Acceptable Load Flow Error for	
Consider Reactive Power Limits	No	Nodes	0.01 kVA
		Model Equations	0.01 %

Area: Haharu	Study Case: KHTL	Annex: / 10

Volt. Level [kV]	Generation [MW]/ [Mvar]	Motor Load [MW]/ [Mvar]	Load [MW]/ [Mvar]	Compen-sation [MW]/ [Mvar]	External Infeed [MW]/ [Mvar]	Interchange to	Power Interchange [MW]/ [Mvar]	Total Losses [MW]/ [Mvar]	Load Losses [MW]/ [Mvar]	Noload Losses [MW]/ [Mvar]
20.00	0.00	0.00	0.05	0.00	0.00			0.00	0.00	0.00
	0.00	0.00	0.03	0.00	0.00			0.00	0.00	0.00
						0.69 kV	-0.85	0.00	0.00	0.00
							0.05	0.05	0.02	0.02
Total:	0.00	0.00	0.05	0.00	0.00		-0.06	0.00	0.00	0.00
	0.00	0.00	0.03	0.00	0.00		-0.08	0.05	0.02	0.02

This report is available at no cost from the National Renewable Energy Laboratory (NREL) at www.nrel.gov/publications.

		DIgSILENT PowerFactory 15.2.1	Project:
			Date: 4/22/2015

Load Flow Calculation	Complete System Report: Substations, Voltage Profiles, Grid Interchange, Area Interchange

AC Load Flow, balanced, positive sequence		Automatic Model Adaptation for Convergence	No
Automatic Tap Adjust of Transformers	Yes	Max. Acceptable Load Flow Error for	
Consider Reactive Power Limits	No	Nodes	0.01 kVA
		Model Equations	0.01 %

Area Summaries	Study Case: KHTL	Annex: / 11

	Generation [MW]/ [Mvar]	Motor Load [MW]/ [Mvar]	Load [MW]/ [Mvar]	Compen-sation [MW]/ [Mvar]	External Infeed [MW]/ [Mvar]	Inter Area Flow [MW]/ [Mvar]	Total Losses [MW]/ [Mvar]	Load Losses [MW]/ [Mvar]	Noload Losses [MW]/ [Mvar]
\pramod\Sumba-V3_HWLL\Network Model\Network Data\Areas\Kambajawa									
	1.954	0.000	1.691	0.000	0.000	0.25	0.01	0.01	0.00
	1.031	0.000	0.556	0.000	0.000	0.42	0.06	0.06	0.00
\pramod\Sumba-V3_HWLL\Network Model\Network Data\Areas\Waingapu									
	0.000	0.000	1.009	0.000	0.000	-1.01	0.00	0.00	0.00
	0.000	0.000	0.332	0.000	0.000	-0.33	0.00	0.01	-0.00
\pramod\Sumba-V3_HWLL\Network Model\Network Data\Areas\Haharu									
	0.000	0.000	0.051	0.000	0.000	-0.06	0.00	0.00	0.00
	0.000	0.000	0.032	0.000	0.000	-0.08	0.05	0.02	0.02

This report is available at no cost from the National Renewable Energy Laboratory (NREL) at www.nrel.gov/publications.

High Wind High Load (For Two WTGs)

```
---------------------------------------------------------------------------------------------------------------------------------
|                 |                                                                    |   DIgSILENT   | Project:                    |
|                 |                                                                    | PowerFactory  |-----------------------------
|                 |                                                                    |    15.2.1     | Date:  9/28/2015            |
---------------------------------------------------------------------------------------------------------------------------------
---------------------------------------------------------------------------------------------------------------------------------
| Load Flow Calculation                 Complete System Report: Substations, Voltage Profiles, Grid Interchange, Area Interchange |
---------------------------------------------------------------------------------------------------------------------------------
|     AC Load Flow, balanced, positive sequence                |    Automatic Model Adaptation for Convergence            No        |
|     Automatic Tap Adjust of Transformers            Yes      |    Max. Acceptable Load Flow Error for                             |
|     Consider Reactive Power Limits                  No       |       Nodes                                              0.01 kVA  |
|                                                              |       Model Equations                                    0.01 %    |
---------------------------------------------------------------------------------------------------------------------------------
---------------------------------------------------------------------------------------------------------------------------------
| Grid: Sumba                System Stage: Sumba           | Study Case: KGL-noclear               | Annex:                  / 1  |
---------------------------------------------------------------------------------------------------------------------------------
|           rated                          Active Reactive Power                |                                                          |
|          Voltage     Bus-voltage         Power   Power   Factor Current Loading|                 Additional Data                          |
|           [kV]  [p.u.]    [kV]   [deg]   [MW]   [Mvar]    [-]    [kA]    [%]  |                                                          |
---------------------------------------------------------------------------------------------------------------------------------
|HB(1)                                                                           |                                                          |
|  Haharu  20.00    1.08   21.69  151.82                                         |                                                          |
|   Cub_1  /Lod      Haharu Load            0.10     0.06   0.85    0.00         |Pl0:     0.10 MW   Ql0:   0.06 Mvar                       |
|   Cub_1  /Lne      K-H2 Tline             1.58    -0.17   0.99    0.04    4.23 |Pv:     92.37 kW   cLod:  0.00 Mvar L:   18.00 km|
|   Cub_1  /Lne      Line                  -0.00     0.00  -1.00    0.00    0.00 |Pv:      0.00 kW   cLod: -0.00 Mvar L:    0.00 km|
|   Cub_1  /Tr2      WTG01 Trafo           -0.84     0.05  -1.00    0.02   91.49 |Tap:     0.00      Min:     -2      Max:     2      |
|   Cub_1  /Tr2      WTG01 Trafo(1)        -0.84     0.05  -1.00    0.02   91.49 |Tap:     0.00      Min:     -2      Max:     2      |
|                                                                                |                                                          |
|K-BB(1)                                                                         |                                                          |
|  K1 400V Bu.40    1.06    0.42    0.43                                         |                                                          |
|   Cub_1  /Sym      Volvo                  0.22     0.17   0.80    0.37  100.00 |Typ:    PQ                                                |
|   Cub_1  /Tr2      T8                     0.22     0.17   0.80    0.37   84.34 |Tap:     2.00      Min:      1      Max:     5      |
|                                                                                |                                                          |
|K-BB(2)                                                                         |                                                          |
|  K3 400V Bu.40    1.06    0.42    0.69                                         |                                                          |
|   Cub_1  /Sym      MTU1                   0.65     0.49   0.80    1.10  100.00 |Typ:    PQ                                                |
|   Cub_1  /Tr2      T6                     0.65     0.49   0.80    1.10   78.27 |Tap:     2.00      Min:      1      Max:     5      |
|                                                                                |                                                          |
|K-BB(3)                                                                         |                                                          |
|  K4 400V Bu.40    1.07    0.43    1.38                                         |                                                          |
|   Cub_1  /Sym      DOOSAN3                0.42     0.31   0.80    0.71  100.00 |Typ:    PQ                                                |
|   Cub_1  /Sym      DOOSAN4                0.42     0.31   0.80    0.71  100.00 |Typ:    PQ                                                |
|   Cub_1  /Sym      DOOSAN5                0.42     0.31   0.80    0.71  100.00 |Typ:    PQ                                                |
|   Cub_1  /Tr2      T4                     1.26     0.94   0.80    2.12   93.85 |Tap:     2.00      Min:      1      Max:     5      |
|                    Total                -------  -------                        |                                                          |
|                    Generation:            1.26     0.94                        |                                                          |
|                                                                                |                                                          |
---------------------------------------------------------------------------------------------------------------------------------
---------------------------------------------------------------------------------------------------------------------------------
| Grid: Sumba                System Stage: Sumba           | Study Case: KGL-noclear               | Annex:                  / 2  |
---------------------------------------------------------------------------------------------------------------------------------
|           rated                          Active Reactive Power                |                                                          |
|          Voltage     Bus-voltage         Power   Power   Factor Current Loading|                 Additional Data                          |
|           [kV]  [p.u.]    [kV]   [deg]   [MW]   [Mvar]    [-]    [kA]    [%]  |                                                          |
---------------------------------------------------------------------------------------------------------------------------------
|K-BB(4)                                                                         |                                                          |
```


This report is available at no cost from the National Renewable Energy Laboratory (NREL) at www.nrel.gov/publications.

```
|  Kambajava0.00    1.01   20.19  149.35                                                                |                                                                |
|   Cub_1  /Lod      Kambajava Load        3.49     1.69   0.90    0.11          |Pl0:     3.49 MW   Ql0:   1.69 Mvar                                |
|   Cub_1  /Lne      K-H1                 -1.46     0.21  -0.99    0.04    4.22  |Pv:     24.91 kW   cLod:  0.00 Mvar L:    7.00 km|
|   Cub_1  /Lne      K-W Tline             1.88     0.86   0.91    0.06    5.93  |Pv:     16.59 kW   cLod:  0.00 Mvar L:    7.00 km|
|   Cub_1  /Tr2      T1                   -0.43    -0.31  -0.81    0.02   69.31  |Tap:     3.00      Min:      1      Max:     5    |
|   Cub_1  /Tr2      T2                   -0.00    -0.00  -1.00    0.00    0.00  |Tap:     5.00      Min:      1      Max:     5    |
|   Cub_1  /Tr2      T3                   -0.38    -0.27  -0.81    0.01   61.42  |Tap:     3.00      Min:      1      Max:     5    |
|   Cub_1  /Tr2      T4                   -1.24    -0.87  -0.82    0.04   93.85  |Tap:     2.00      Min:      1      Max:     5    |
|   Cub_1  /Tr2      T5                   -0.83    -0.59  -0.81    0.03   63.33  |Tap:     2.00      Min:      1      Max:     5    |
|   Cub_1  /Tr2      T6                   -0.64    -0.46  -0.81    0.02   78.27  |Tap:     2.00      Min:      1      Max:     5    |
|   Cub_1  /Tr2      T7                   -0.18    -0.12  -0.83    0.01   33.87  |Tap:     4.00      Min:      1      Max:     5    |
|   Cub_1  /Tr2      T8                   -0.22    -0.16  -0.81    0.01   84.34  |Tap:     2.00      Min:      1      Max:     5    |
|                                                                                |                                                                |
|K-BB(5)                                                                         |                                                                |
|  K4 400V Bu.40    1.06    0.42    0.72                                         |                                                                |
|   Cub_1  /Sym      DOOSAN1               0.42     0.31   0.80    0.72  100.00  |Typ:    PQ                                                      |
|   Cub_1  /Sym      DOOSAN2               0.42     0.31   0.80    0.72  100.00  |Typ:    PQ                                                      |
|   Cub_1  /Tr2      T5                    0.84     0.63   0.80    1.43   63.33  |Tap:     2.00      Min:      1      Max:     5    |
|                    Total              -------  -------                          |                                                                |
|                    Generation:           0.84     0.63                          |                                                                |
|                                                                                |                                                                |
|K-BB                                                                            |                                                                |
|  K2 400V Bu.40    1.00    0.40    0.00                                         |                                                                |
|   Cub_1  /Sym      MAN1                  0.18     0.12   0.83    0.31   39.70  |Typ:    SL                                                      |
|   Cub_1  /Tr2      T7                    0.18     0.12   0.83    0.31   33.87  |Tap:     4.00      Min:      1      Max:     5    |
|                                                                                |                                                                |
|KBB10                                                                           |                                                                |
|  K5 400V  0.40    1.03    0.41    0.42                                         |                                                                |
|   Cub_1  /Sym      MTU2                  0.43     0.32   0.80    0.75  100.00  |Typ:    PQ                                                      |
|   Cub_1  /Tr2      T1                    0.43     0.32   0.80    0.75   69.31  |Tap:     3.00      Min:      1      Max:     5    |
|                                                                                |                                                                |
|KBB11                                                                           |                                                                |
|  K6 400V  0.40    1.00    0.40    0.00                                         |                                                                |
|   Cub_1  /Sym      MAN2                  0.00     0.00   1.00    0.00    0.00  |Typ:    PQ                                                      |
|   Cub_1  /Tr2      T2                    0.00     0.00   1.00    0.00    0.00  |Tap:     5.00      Min:      1      Max:     5    |
|                                                                                |                                                                |
|KBB12                                                                           |                                                                |
|  K7 400V  0.40    1.03    0.41    0.30                                         |                                                                |
|   Cub_1  /Sym      MTU4                  0.38     0.28   0.80    0.66   88.37  |Typ:    PQ                                                      |
|   Cub_1  /Tr2      T3                    0.38     0.28   0.80    0.66   61.42  |Tap:     3.00      Min:      1      Max:     5    |
|                                                                                |                                                                |
-------------------------------------------------------------------------------------------------------------------------------------------
-------------------------------------------------------------------------------------------------------------------------------------------
| Grid: Sumba                System Stage: Sumba           | Study Case: KGL-noclear                | Annex:                   / 3  |
-------------------------------------------------------------------------------------------------------------------------------------------
|           rated                          Active Reactive Power                                |                                                                |
|          Voltage     Bus-voltage         Power   Power   Factor Current Loading|                 Additional Data                                |
|           [kV]  [p.u.]    [kV]   [deg]   [MW]   [Mvar]    [-]    [kA]    [%]  |                                                                |
-------------------------------------------------------------------------------------------------------------------------------------------
|Single Busbar(3)                                                                |                                                                |
|  K-H2    20.00    1.02   20.50  150.01                                         |                                                                |
|   Cub_1  /Lne      K-H1                  1.49    -0.21   0.99    0.04    4.22  |Pv:     24.91 kW   cLod:  0.00 Mvar L:    7.00 km|
|   Cub_1  /Lne      K-H2 Tline           -1.49     0.21  -0.99    0.04    4.23  |Pv:     92.37 kW   cLod:  0.00 Mvar L:   18.00 km|
|                                                                                |                                                                |
|WBB(1)                                                                          |                                                                |
|  W6.3kV   6.30    1.01    6.34   -0.57                                         |                                                                |
|   Cub_1  /Sym      SWD1                  0.00     0.00   1.00    0.00    0.00  |Typ:    SL                                                      |
|   Cub_1  /Sym      SWD2                  0.00     0.00   1.00    0.00    0.00  |Typ:    SL                                                      |
```


This report is available at no cost from the National Renewable Energy Laboratory (NREL) at www.nrel.gov/publications.

```
|   Cub_1  /Sym      SWD3                                                          |Typ:    PQ                                          |
|   Cub_1  /Sym      YANMAR                0.22     0.16   0.80    0.03  100.00 |Typ:    PQ                                          |
|   Cub_1  /Tr2      T12                   0.22     0.16   0.80    0.03   21.86 |Tap:     3.00      Min:      1      Max:     5    |
|                    Total               -------  -------                        |                                                |
|                    Generation:           0.22     0.16                         |                                                |
|                                                                                |                                                |
|WBB(2)                                                                          |                                                |
|  W3 400V  0.40    1.00    0.40    0.00                                         |                                                |
|   Cub_1  /Sym      CAT C32               0.00     0.00   1.00    0.00    0.00 |Typ:    PQ                                          |
|   Cub_1  /Tr2      T14                   0.00     0.00   1.00    0.00    0.00 |Tap:     3.00      Min:      1      Max:     5    |
|                                                                                |                                                |
|WBB(3)                                                                          |                                                |
|  Waingapu20.00    1.00   19.95  148.98                                         |                                                |
|   Cub_1  /Lod      Waingapu Load         2.08     1.01   0.90    0.07         |Pl0:     2.08 MW   Ql0:   1.01 Mvar                     |
|   Cub_1  /Lne      K-W Tline            -1.86    -0.85  -0.91    0.06    5.93 |Pv:     16.59 kW   cLod:  0.00 Mvar L:    7.00 km|
|   Cub_1  /Tr2      T11                   0.00     0.00   1.00    0.00    0.00 |Tap:     3.00      Min:      1      Max:     5    |
|   Cub_1  /Tr2      T12                  -0.22    -0.16  -0.80    0.01   21.86 |Tap:     3.00      Min:      1      Max:     5    |
|   Cub_1  /Tr2      T13                  -0.00     0.00  -1.00    0.00    0.00 |Tap:     3.00      Min:      1      Max:     5    |
|   Cub_1  /Tr2      T14                  -0.00    -0.00  -1.00    0.00    0.00 |Tap:     3.00      Min:      1      Max:     5    |
|                                                                                |                                                |
|WBB(4)                                                                          |                                                |
|  W2 400V  0.40    1.00    0.40    0.00                                         |                                                |
|   Cub_1  /Sym      DEUT Z-2              0.00    -0.00   1.00    0.00    0.00 |Typ:    PQ                                          |
|   Cub_1  /Tr2      T13                   0.00     0.00   1.00    0.00    0.00 |Tap:     3.00      Min:      1      Max:     5    |
|                                                                                |                                                |
|WBB                                                                             |                                                |
|  W1 400V  0.40    1.00    0.40   -1.02                                         |                                                |
|   Cub_1  /Sym      DEUT Z-1              0.00     0.00   1.00    0.00    0.00 |Typ:    SL                                          |
|   Cub_1  /Tr2      T11                  -0.00    -0.00  -1.00    0.00    0.00 |Tap:     3.00      Min:      1      Max:     5    |
|                                                                                |                                                |
|WTG01LV                                                                         |                                                |
|           0.69    1.09    0.75 -175.33                                         |                                                |
|   Cub_4  /Genstat  WTG01                 0.85     0.00   1.00    0.65  100.00 |                                                |
|   Cub_3  /Tr2      WTG01 Trafo           0.85     0.00   1.00    0.65   91.49 |Tap:     0.00      Min:     -2      Max:     2    |
|                                                                                |                                                |
-------------------------------------------------------------------------------------------------------------------------------------
-------------------------------------------------------------------------------------------------------------------------------------
| Grid: Sumba                System Stage: Sumba          | Study Case: KGL-noclear              | Annex:                  / 4  |
-------------------------------------------------------------------------------------------------------------------------------------
|           rated                          Active Reactive Power                |                                                |
|          Voltage     Bus-voltage         Power   Power   Factor Current Loading|                Additional Data                 |
|           [kV]  [p.u.]    [kV]   [deg]   [MW]   [Mvar]    [-]    [kA]    [%]  |                                                |
-------------------------------------------------------------------------------------------------------------------------------------
|WTG01LV(1)                                                                      |                                                |
|           0.69    1.09    0.75 -175.33                                         |                                                |
|   Cub_4  /Genstat  WTG02                 0.85     0.00   1.00    0.65  100.00 |                                                |
|   Cub_3  /Tr2      WTG01 Trafo(1)        0.85     0.00   1.00    0.65   91.49 |Tap:     0.00      Min:     -2      Max:     2    |
|                                                                                |                                                |
-------------------------------------------------------------------------------------------------------------------------------------
```


This report is available at no cost from the National Renewable Energy Laboratory (NREL) at www.nrel.gov/publications.

```
---------------------------------------------------------------------------------------------------------------------------------
|                 |                                                                    |   DIgSILENT   | Project:                    |
|                 |                                                                    | PowerFactory  |-----------------------------
|                 |                                                                    |    15.2.1     | Date:  9/28/2015            |
---------------------------------------------------------------------------------------------------------------------------------
---------------------------------------------------------------------------------------------------------------------------------
| Load Flow Calculation                Complete System Report: Substations, Voltage Profiles, Grid Interchange, Area Interchange |
---------------------------------------------------------------------------------------------------------------------------------
|     AC Load Flow, balanced, positive sequence                |    Automatic Model Adaptation for Convergence           No        |
|     Automatic Tap Adjust of Transformers            Yes      |    Max. Acceptable Load Flow Error for                            |
|     Consider Reactive Power Limits                  No       |       Nodes                                             0.01 kVA  |
|                                                              |       Model Equations                                   0.01 %    |
---------------------------------------------------------------------------------------------------------------------------------
---------------------------------------------------------------------------------------------------------------------------------
| Grid: Sumba                System Stage: Sumba           | Study Case: KGL-noclear                | Annex:                  / 5  |
---------------------------------------------------------------------------------------------------------------------------------
|                     rtd.V      Bus - voltage                                          Voltage - Deviation [%]                      |
|                      [kV]  [p.u.]     [kV]  [deg]                -10         -5            0           +5         +10            |
---------------------------------------------------------------------------------------------------------------------------------
|HB(1)                                                                                                                            |
|  Haharu             20.00   1.084    21.69 151.82                                        |>>>>>>>>>>>>>>>>>>>>>                |
|K-BB(1)                                                                                                                          |
|  K1 400V Bus         0.40   1.059     0.42   0.43                                        |>>>>>>>>>>>>>>                       |
|K-BB(2)                                                                                                                          |
|  K3 400V Bus         0.40   1.062     0.42   0.69                                        |>>>>>>>>>>>>>>>                      |
|K-BB(3)                                                                                                                          |
|  K4 400V Bus         0.40   1.073     0.43   1.38                                        |>>>>>>>>>>>>>>>>>>                   |
|K-BB(4)                                                                                                                          |
|  Kambajava          20.00   1.009    20.19 149.35                                        |>>                                   |
|K-BB(5)                                                                                                                          |
|  K4 400V Bus         0.40   1.060     0.42   0.72                                        |>>>>>>>>>>>>>>                       |
|K-BB                                                                                                                             |
|  K2 400V Bus         0.40   1.000     0.40   0.00                                        |                                     |
|KBB10                                                                                                                            |
|  K5 400V             0.40   1.034     0.41   0.42                                        |>>>>>>>>                             |
|KBB11                                                                                                                            |
|  K6 400V             0.40   1.000     0.40   0.00                                        |                                     |
|KBB12                                                                                                                            |
|  K7 400V             0.40   1.031     0.41   0.30                                        |>>>>>>>                              |
|Single Busbar(3)                                                                                                                 |
|  K-H2               20.00   1.025    20.50 150.01                                        |>>>>>>                               |
|WBB(1)                                                                                                                           |
|  W6.3kV              6.30   1.007     6.34  -0.57                                        |>>                                   |
|WBB(2)                                                                                                                           |
|  W3 400V             0.40   1.000     0.40   0.00                                        |                                     |
|WBB(3)                                                                                                                           |
|  Waingapu           20.00   0.997    19.95 148.98                                       <|                                    |
|WBB(4)                                                                                                                           |
|  W2 400V             0.40   1.000     0.40   0.00                                        |                                     |
|WBB                                                                                                                              |
|  W1 400V             0.40   0.997     0.40  -1.02                                       <|                                    |
|WTG01LV                                                                                                                          |
---------------------------------------------------------------------------------------------------------------------------------
---------------------------------------------------------------------------------------------------------------------------------
| Grid: Sumba                System Stage: Sumba           | Study Case: KGL-noclear                | Annex:                  / 6  |
---------------------------------------------------------------------------------------------------------------------------------
|                     rtd.V      Bus - voltage                                          Voltage - Deviation [%]                      |
|                      [kV]  [p.u.]     [kV]  [deg]                -10         -5            0           +5         +10            |
```


This report is available at no cost from the National Renewable Energy Laboratory (NREL) at www.nrel.gov/publications.

	0.69	1.093	0.75-175.33	>>>>>>>>>>>>>>>>>>>>>>	
WTG01LV(1)					
	0.69	1.093	0.75-175.33	>>>>>>>>>>>>>>>>>>>>>>	

		DIgSILENT PowerFactory 15.2.1	Project:
			Date: 9/28/2015

Load Flow Calculation	Complete System Report: Substations, Voltage Profiles, Grid Interchange, Area Interchange

AC Load Flow, balanced, positive sequence		Automatic Model Adaptation for Convergence	No
Automatic Tap Adjust of Transformers	Yes	Max. Acceptable Load Flow Error for	
Consider Reactive Power Limits	No	Nodes	0.01 kVA
		Model Equations	0.01 %

Grid: Sumba	System Stage: Sumba	Study Case: KGL-noclear	Annex: / 7

Volt. Level [kV]	Generation [MW]/ [Mvar]	Motor Load [MW]/ [Mvar]	Load [MW]/ [Mvar]	Compen-sation [MW]/ [Mvar]	External Infeed [MW]/ [Mvar]	Interchange to	Power Interchange [MW]/ [Mvar]	Total Losses [MW]/ [Mvar]	Load Losses [MW]/ [Mvar]	Noload Losses [MW]/ [Mvar]
0.40	3.96	0.00	0.00	0.00	0.00			0.00	0.00	0.00
	2.96	0.00	0.00	0.00	0.00			0.00	0.00	0.00
						20.00 kV	3.96	0.04	0.04	0.00
							2.96	0.18	0.18	0.00
0.48	0.00	0.00	0.00	0.00	0.00			0.00	0.00	0.00
	0.00	0.00	0.00	0.00	0.00			0.00	0.00	0.00
						0.80 kV	-0.01	0.00	0.00	0.00
							-0.03	-0.03	-0.03	0.00
						20.00 kV	0.01	0.01	0.00	0.01
							0.03	0.03	0.00	0.03
0.69	1.70	0.00	0.00	0.00	0.00			0.00	0.00	0.00
	0.00	0.00	0.00	0.00	0.00			0.00	0.00	0.00
						20.00 kV	1.70	0.02	0.02	0.00
							0.00	0.11	0.08	0.02
0.80	0.00	0.00	0.00	0.00	0.01			0.00	0.00	0.00
	0.00	0.00	0.00	0.00	0.00			0.00	0.00	0.00
						0.48 kV	0.01	0.00	0.00	0.00
							0.00	-0.03	-0.03	0.00
6.30	0.22	0.00	0.00	0.00	0.00			0.00	0.00	0.00
	0.16	0.00	0.00	0.00	0.00			0.00	0.00	0.00
						20.00 kV	0.22	0.00	0.00	0.00
							0.16	0.00	0.00	0.00

Grid: Sumba	System Stage: Sumba	Study Case: KGL-noclear	Annex: / 8

Volt. Level	Generation	Motor Load	Load	Compen-sation	External Infeed	Interchange	Power Interchange	Total Losses	Load Losses	Noload Losses

This report is available at no cost from the National Renewable Energy Laboratory (NREL) at www.nrel.gov/publications.

[kV]	[MW]/ [Mvar]	[MW]/ [Mvar]	[MW]/ [Mvar]	[MW]/ [Mvar]	[MW]/ [Mvar]	to	[MW]/ [Mvar]	[MW]/ [Mvar]	[MW]/ [Mvar]	[MW]/ [Mvar]
20.00	0.00	0.00	5.68	0.00	0.00			0.13	0.13	0.00
	0.00	0.00	2.77	0.00	0.00			0.06	0.07	-0.01
						0.40 kV	-3.91	0.04	0.04	0.00
							-2.77	0.18	0.18	0.00
						0.69 kV	-1.68	0.02	0.02	0.00
							0.11	0.11	0.08	0.02
						6.30 kV	-0.22	0.00	0.00	0.00
							-0.16	0.00	0.00	0.00
Total:	5.88	0.00	5.68	0.00	0.01		0.00	0.21	0.19	0.01
	3.12	0.00	2.77	0.00	0.00		0.00	0.35	0.32	0.04

	DIgSILENT PowerFactory 15.2.1	Project:
		Date: 9/28/2015

Load Flow Calculation	Complete System Report: Substations, Voltage Profiles, Grid Interchange, Area Interchange

AC Load Flow, balanced, positive sequence		Automatic Model Adaptation for Convergence	No
Automatic Tap Adjust of Transformers	Yes	Max. Acceptable Load Flow Error for	
Consider Reactive Power Limits	No	Nodes	0.01 kVA
		Model Equations	0.01 %

Total System Summary	Study Case: KGL-noclear	Annex: / 9

	Generation [MW]/ [Mvar]	Motor Load [MW]/ [Mvar]	Load [MW]/ [Mvar]	Compen- sation [MW]/ [Mvar]	External Infeed [MW]/ [Mvar]	Inter Area Flow [MW]/ [Mvar]	Total Losses [MW]/ [Mvar]	Load Losses [MW]/ [Mvar]	Noload Losses [MW]/ [Mvar]
\pramod\Sumba-V3_HWHL_twoWTG_powerstore\Network Model\Network Data\Sumba									
	5.88	0.00	5.68	0.00	0.01	0.00	0.21	0.19	0.01
	3.12	0.00	2.77	0.00	0.00	0.00	0.35	0.32	0.04
Total:									
	5.88	0.00	5.68	0.00	0.01		0.21	0.19	0.01
	3.12	0.00	2.77	0.00	0.00		0.35	0.32	0.04

	DIgSILENT PowerFactory 15.2.1	Project:
		Date: 9/28/2015

Load Flow Calculation	Complete System Report: Substations, Voltage Profiles, Grid Interchange, Area Interchange

AC Load Flow, balanced, positive sequence		Automatic Model Adaptation for Convergence	No
Automatic Tap Adjust of Transformers	Yes	Max. Acceptable Load Flow Error for	
Consider Reactive Power Limits	No	Nodes	0.01 kVA
		Model Equations	0.01 %

This report is available at no cost from the National Renewable Energy Laboratory (NREL) at www.nrel.gov/publications.

| Area: Kambajava | Study Case: KGL-noclear | Annex: / 10 |

Volt. Level [kV]	Generation [MW]/ [Mvar]	Motor Load [MW]/ [Mvar]	Load [MW]/ [Mvar]	Compen- sation [MW]/ [Mvar]	External Infeed [MW]/ [Mvar]	Interchange to	Power Interchange [MW]/ [Mvar]	Total Losses [MW]/ [Mvar]	Load Losses [MW]/ [Mvar]	Noload Losses [MW]/ [Mvar]
0.40	3.96	0.00	0.00	0.00	0.00			0.00	0.00	0.00
	2.96	0.00	0.00	0.00	0.00			0.00	0.00	0.00
						20.00 kV	3.96	0.04	0.04	0.00
							2.96	0.18	0.18	0.00
20.00	0.00	0.00	3.49	0.00	0.00			0.00	0.00	0.00
	0.00	0.00	1.69	0.00	0.00			0.00	0.00	0.00
						0.40 kV	-3.91	0.04	0.04	0.00
							-2.77	0.18	0.18	0.00
						Waingapu	1.88	0.02	0.02	0.00
							0.86	0.02	0.02	-0.00
Total:	3.96	0.00	3.49	0.00	0.00		0.42	0.04	0.04	0.00
	2.96	0.00	1.69	0.00	0.00		1.08	0.18	0.18	0.00
						Waingapu	1.88	0.02	0.02	0.00
							0.86	0.02	0.02	-0.00

	DIgSILENT PowerFactory 15.2.1	Project:
		Date: 9/28/2015

Load Flow Calculation	Complete System Report: Substations, Voltage Profiles, Grid Interchange, Area Interchange

AC Load Flow, balanced, positive sequence		Automatic Model Adaptation for Convergence	No
Automatic Tap Adjust of Transformers	Yes	Max. Acceptable Load Flow Error for	
Consider Reactive Power Limits	No	Nodes	0.01 kVA
		Model Equations	0.01 %

| Area: Waingapu | Study Case: KGL-noclear | Annex: / 11 |

Volt. Level [kV]	Generation [MW]/ [Mvar]	Motor Load [MW]/ [Mvar]	Load [MW]/ [Mvar]	Compen- sation [MW]/ [Mvar]	External Infeed [MW]/ [Mvar]	Interchange to	Power Interchange [MW]/ [Mvar]	Total Losses [MW]/ [Mvar]	Load Losses [MW]/ [Mvar]	Noload Losses [MW]/ [Mvar]
0.40	0.00	0.00	0.00	0.00	0.00			0.00	0.00	0.00
	0.00	0.00	0.00	0.00	0.00			0.00	0.00	0.00
6.30	0.22	0.00	0.00	0.00	0.00			0.00	0.00	0.00
	0.16	0.00	0.00	0.00	0.00			0.00	0.00	0.00
						20.00 kV	0.22	0.00	0.00	0.00
							0.16	0.00	0.00	0.00
20.00	0.00	0.00	2.08	0.00	0.00			0.00	0.00	0.00
	0.00	0.00	1.01	0.00	0.00			0.00	0.00	0.00
						6.30 kV	-0.22	0.00	0.00	0.00
							-0.16	0.00	0.00	0.00
						Kambajava	-1.88	0.02	0.02	0.00

This report is available at no cost from the National Renewable Energy Laboratory (NREL) at www.nrel.gov/publications.

						-0.86	0.02	0.02	-0.00	
Total:	0.22	0.00	2.08	0.00	0.00	-1.88	0.02	0.02	0.00	
	0.16	0.00	1.01	0.00	0.00	-0.86	0.02	0.03	-0.00	
					Kambajava	-1.88	0.02	0.02	0.00	
						-0.86	0.02	0.02	-0.00	

DIgSILENT PowerFactory 15.2.1	Project:	
	Date: 9/28/2015	

Load Flow Calculation — Complete System Report: Substations, Voltage Profiles, Grid Interchange, Area Interchange

AC Load Flow, balanced, positive sequence		Automatic Model Adaptation for Convergence	No
Automatic Tap Adjust of Transformers	Yes	Max. Acceptable Load Flow Error for	
Consider Reactive Power Limits	No	Nodes	0.01 kVA
		Model Equations	0.01 %

Area: Haharu — Study Case: KGL-noclear — Annex: / 12

Volt. Level [kV]	Generation [MW]/ [Mvar]	Motor Load [MW]/ [Mvar]	Load [MW]/ [Mvar]	Compen-sation [MW]/ [Mvar]	External Infeed [MW]/ [Mvar]	Interchange to	Power Interchange [MW]/ [Mvar]	Total Losses [MW]/ [Mvar]	Load Losses [MW]/ [Mvar]	Noload Losses [MW]/ [Mvar]
20.00	0.00	0.00	0.10	0.00	0.00			0.00	0.00	0.00
	0.00	0.00	0.06	0.00	0.00			0.00	0.00	0.00
						0.69 kV	-1.68	0.02	0.02	0.00
							0.11	0.11	0.08	0.02
Total:	0.00	0.00	0.10	0.00	0.00		-0.12	0.02	0.02	0.00
	0.00	0.00	0.06	0.00	0.00		-0.17	0.11	0.08	0.02

DIgSILENT PowerFactory 15.2.1	Project:	
	Date: 9/28/2015	

Load Flow Calculation — Complete System Report: Substations, Voltage Profiles, Grid Interchange, Area Interchange

AC Load Flow, balanced, positive sequence		Automatic Model Adaptation for Convergence	No
Automatic Tap Adjust of Transformers	Yes	Max. Acceptable Load Flow Error for	
Consider Reactive Power Limits	No	Nodes	0.01 kVA
		Model Equations	0.01 %

Area Summaries — Study Case: KGL-noclear — Annex: / 13

Generation [MW]/ [Mvar]	Motor Load [MW]/ [Mvar]	Load [MW]/ [Mvar]	Compen-sation [MW]/ [Mvar]	External Infeed [MW]/ [Mvar]	Inter Area Flow [MW]/ [Mvar]	Total Losses [MW]/ [Mvar]	Load Losses [MW]/ [Mvar]	Noload Losses [MW]/ [Mvar]

\pramod\Sumba-V3_HWHL_twoWTG_powerstore\Network Model\Network Data\Areas\Kambajava

This report is available at no cost from the National Renewable Energy Laboratory (NREL) at www.nrel.gov/publications.

```
|             3.956      0.000      3.494      0.000      0.000                      0.42          0.04       0.04      0.00
|
|             2.955      0.000      1.692      0.000      0.000                      1.08          0.18       0.18      0.00
|
-------------------------------------------------------------------------------------------------------------------------------
| \pramod\Sumba-V3_HWHL_twoWTG_powerstore\Network Model\Network Data\Areas\Waingapu                                            |
|             0.220      0.000      2.084      0.000      0.000                     -1.88          0.02       0.02      0.00
|
|             0.165      0.000      1.009      0.000      0.000                     -0.86          0.02       0.03     -0.00
|
-------------------------------------------------------------------------------------------------------------------------------
| \pramod\Sumba-V3_HWHL_twoWTG_powerstore\Network Model\Network Data\Areas\Haharu                                              |
|             0.000      0.000      0.104      0.000      0.000                     -0.12          0.02       0.02      0.00
|
|             0.000      0.000      0.064      0.000      0.000                     -0.17          0.11       0.08      0.02
|
-------------------------------------------------------------------------------------------------------------------------------
```


This report is available at no cost from the National Renewable Energy Laboratory (NREL) at www.nrel.gov/publications.

High Wind Low Load (For Two WTGs)

```
------------------------------------------------------------------------------------------------------------------------------------
|                 |                                                                    |   DIgSILENT   | Project:                    |
|                 |                                                                    | PowerFactory  |-----------------------------
|                 |                                                                    |    15.2.1     | Date:  9/28/2015            |
------------------------------------------------------------------------------------------------------------------------------------
------------------------------------------------------------------------------------------------------------------------------------
| Load Flow Calculation                 Complete System Report: Substations, Voltage Profiles, Grid Interchange, Area Interchange|
------------------------------------------------------------------------------------------------------------------------------------
|     AC Load Flow, balanced, positive sequence                |    Automatic Model Adaptation for Convergence            No       |
|     Automatic Tap Adjust of Transformers            Yes      |    Max. Acceptable Load Flow Error for                            |
|     Consider Reactive Power Limits                  No       |       Nodes                                              0.01 kVA |
|                                                              |       Model Equations                                    0.01 %   |
------------------------------------------------------------------------------------------------------------------------------------
------------------------------------------------------------------------------------------------------------------------------------
| Grid: Sumba                System Stage: Sumba           | Study Case: KGL                       | Annex:                  / 1 |
------------------------------------------------------------------------------------------------------------------------------------
|           rated                          Active Reactive Power                |                                                          |
|          Voltage     Bus-voltage         Power   Power   Factor Current Loading|                 Additional Data                          |
|           [kV]  [p.u.]    [kV]   [deg]   [MW]   [Mvar]    [-]    [kA]    [%]  |                                                          |
------------------------------------------------------------------------------------------------------------------------------------
|HB(1)                                                                           |                                                          |
|  Haharu  20.00    1.08   21.62  152.18                                         |                                                          |
|   Cub_1  /Lod      Haharu Load            0.05     0.03   0.85    0.00         |Plo:     0.05 MW   Qlo:   0.03 Mvar                       |
|   Cub_1  /Lne      K-H2 Tline             1.64    -0.12   1.00    0.04    4.39 |Pv:     99.80 kW   cLod:  0.00 Mvar L:   18.00km|
|   Cub_1  /Lne      Line                  -0.00    -0.00  -1.00    0.00    0.00 |Pv:      0.00 kW   cLod: -0.00 Mvar L:    0.00km|
|   Cub_1  /Tr2      WTG01 Trafo           -0.85     0.05  -1.00    0.02   42.36 |Tap:     0.00      Min:     -2      Max:     2  |
|   Cub_1  /Tr2      WTG01 Trafo(1)        -0.85     0.05  -1.00    0.02   42.36 |Tap:     0.00      Min:     -2      Max:     2  |
|                                                                                |                                                          |
|K-BB(1)                                                                         |                                                          |
|  K1 400V Bu.40    1.00    0.40    0.00                                         |                                                          |
|   Cub_1  /Sym      Volvo                  0.00     0.00   1.00    0.00    0.00 |Typ:    PQ                                                |
|   Cub_1  /Tr2      T8                     0.00     0.00   1.00    0.00    0.00 |Tap:     3.00      Min:      1      Max:     5  |
|                                                                                |                                                          |
|K-BB(2)                                                                         |                                                          |
|  K3 400V Bu.40    1.00    0.40    0.00                                         |                                                          |
|   Cub_1  /Sym      MTU1                   0.00     0.00   1.00    0.00    0.00 |Typ:    PQ                                                |
|   Cub_1  /Tr2      T6                     0.00     0.00   1.00    0.00    0.00 |Tap:     3.00      Min:      1      Max:     5  |
|                                                                                |                                                          |
|K-BB(3)                                                                         |                                                          |
|  K4 400V Bu.40    1.00    0.40    0.00                                         |                                                          |
|   Cub_1  /Sym      DOOSAN3                0.36     0.83   0.39    1.31  172.96 |Typ:    SL                                                |
|   Cub_1  /Sym      DOOSAN4                0.00     0.00   1.00    0.00    0.00 |Typ:    PQ                                                |
|   Cub_1  /Sym      DOOSAN5                0.00     0.00   1.00    0.00    0.00 |Typ:    SL                                                |
|   Cub_1  /Tr2      T4                     0.36     0.83   0.39    1.31   34.93 |Tap:     4.00      Min:      1      Max:     5  |
|                    Total                -------  -------                        |                                                          |
|                    Generation:            0.36     0.83                         |                                                          |
|                                                                                |                                                          |
------------------------------------------------------------------------------------------------------------------------------------
------------------------------------------------------------------------------------------------------------------------------------
| Grid: Sumba                System Stage: Sumba           | Study Case: KGL                       | Annex:                  / 2 |
------------------------------------------------------------------------------------------------------------------------------------
|           rated                          Active Reactive Power                |                                                          |
|          Voltage     Bus-voltage         Power   Power   Factor Current Loading|                 Additional Data                          |
|           [kV]  [p.u.]    [kV]   [deg]   [MW]   [Mvar]    [-]    [kA]    [%]  |                                                          |
------------------------------------------------------------------------------------------------------------------------------------
|K-BB(4)                                                                         |                                                          |
```


This report is available at no cost from the National Renewable Energy Laboratory (NREL) at www.nrel.gov/publications.

```
|  Kambajava0.00    1.00   20.02  149.75                                                  |                                                                  |
|   Cub_1  /Lod      Kambajava Load        1.69     0.56   0.95    0.05                   |Pl0:     1.69 MW   Ql0:   0.56 Mvar                               |
|   Cub_1  /Lne      K-H1                 -1.51     0.17  -0.99    0.04    4.39           |Pv:     26.93 kW   cLod:  0.00 Mvar L:    7.00km|
|   Cub_1  /Lne      K-W Tline             1.01     0.33   0.95    0.03    3.08           |Pv:      4.47 kW   cLod:  0.00 Mvar L:    7.00km|
|   Cub_1  /Tr2      T1                   -0.00     0.00  -1.00    0.00    0.00           |Tap:     3.00      Min:      1      Max:     5  |
|   Cub_1  /Tr2      T2                   -0.00     0.00  -1.00    0.00    0.00           |Tap:     5.00      Min:      1      Max:     5  |
|   Cub_1  /Tr2      T3                   -0.00     0.00  -1.00    0.00    0.00           |Tap:     3.00      Min:      1      Max:     5  |
|   Cub_1  /Tr2      T4                   -0.35    -0.82  -0.40    0.03   34.93           |Tap:     4.00      Min:      1      Max:     5  |
|   Cub_1  /Tr2      T5                   -0.84    -0.24  -0.96    0.03   34.19           |Tap:     4.00      Min:      1      Max:     5  |
|   Cub_1  /Tr2      T6                   -0.00    -0.00  -1.00    0.00    0.00           |Tap:     3.00      Min:      1      Max:     5  |
|   Cub_1  /Tr2      T7                   -0.00     0.00  -1.00    0.00    0.00           |Tap:     3.00      Min:      1      Max:     5  |
|   Cub_1  /Tr2      T8                   -0.00     0.00  -1.00    0.00    0.00           |Tap:     3.00      Min:      1      Max:     5  |
|                                                                                          |                                                                  |
|K-BB(5)                                                                                   |                                                                  |
|  K4 400V Bu.40    0.99    0.40    0.80                                                   |                                                                  |
|   Cub_1  /Sym      DOOSAN1               0.42    -0.00   1.00    0.61   80.00           |Typ:    PQ                                                |
|   Cub_1  /Sym      DOOSAN2               0.42     0.26   0.85    0.72   94.12           |Typ:    PQ                                                |
|   Cub_1  /Tr2      T5                    0.84     0.26   0.96    1.28   34.19           |Tap:     4.00      Min:      1      Max:     5  |
|                    Total               -------  -------                                   |                                                                  |
|                    Generation:           0.84     0.26                                   |                                                                  |
|                                                                                          |                                                                  |
|K-BB                                                                                      |                                                                  |
|  K2 400V Bu.40    1.00    0.40    0.00                                                   |                                                                  |
|   Cub_1  /Sym      MAN1                  0.00     0.00   1.00    0.00    0.00           |Typ:    PQ                                                |
|   Cub_1  /Tr2      T7                    0.00     0.00   1.00    0.00    0.00           |Tap:     3.00      Min:      1      Max:     5  |
|                                                                                          |                                                                  |
|KBB10                                                                                     |                                                                  |
|  K5 400V  0.40    1.00    0.40    0.00                                                   |                                                                  |
|   Cub_1  /Sym      MTU2                  0.00     0.00   1.00    0.00    0.00           |Typ:    PQ                                                |
|   Cub_1  /Tr2      T1                    0.00     0.00   1.00    0.00    0.00           |Tap:     3.00      Min:      1      Max:     5  |
|                                                                                          |                                                                  |
|KBB11                                                                                     |                                                                  |
|  K6 400V  0.40    1.00    0.40    0.00                                                   |                                                                  |
|   Cub_1  /Sym      MAN2                  0.00    -0.00   1.00    0.00    0.00           |Typ:    PQ                                                |
|   Cub_1  /Tr2      T2                    0.00    -0.00   1.00    0.00    0.00           |Tap:     5.00      Min:      1      Max:     5  |
|                                                                                          |                                                                  |
|KBB12                                                                                     |                                                                  |
|  K7 400V  0.40    1.00    0.40    0.00                                                   |                                                                  |
|   Cub_1  /Sym      MTU4                  0.00     0.00   1.00    0.00    0.00           |Typ:    PQ                                                |
|   Cub_1  /Tr2      T3                    0.00     0.00   1.00    0.00    0.00           |Tap:     3.00      Min:      1      Max:     5  |
|                                                                                          |                                                                  |
-------------------------------------------------------------------------------------------------------------------------------------------------
-------------------------------------------------------------------------------------------------------------------------------------------------
| Grid: Sumba                System Stage: Sumba           | Study Case: KGL                       | Annex:                   / 3 |
-------------------------------------------------------------------------------------------------------------------------------------------------
|           rated                          Active Reactive Power                                   |                                                                  |
|          Voltage     Bus-voltage         Power   Power   Factor Current Loading                  |                Additional Data                                   |
|           [kV]  [p.u.]    [kV]   [deg]    [MW]   [Mvar]    [-]    [kA]    [%]                   |                                                                  |
-------------------------------------------------------------------------------------------------------------------------------------------------
|Single Busbar(3)                                                                                  |                                                                  |
|  K-H2    20.00    1.02   20.36  150.41                                                          |                                                                  |
|   Cub_1  /Lne      K-H1                  1.54    -0.16   0.99    0.04    4.39           |Pv:     26.93 kW   cLod:  0.00 Mvar L:    7.00km|
|   Cub_1  /Lne      K-H2 Tline           -1.54     0.16  -0.99    0.04    4.39           |Pv:     99.80 kW   cLod:  0.00 Mvar L:   18.00km|
|                                                                                          |                                                                  |
|WBB(1)                                                                                    |                                                                  |
|  W6.3kV   6.30    0.00    0.00    0.00                                                   |                                                                  |
|   Cub_1  /Sym      SWD1                  0.00     0.00   1.00    0.00    0.00           |Typ:    PQ                                                |
|   Cub_1  /Sym      SWD2                  0.00     0.00   1.00    0.00    0.00           |Typ:    PQ                                                |
```


This report is available at no cost from the National Renewable Energy Laboratory (NREL) at www.nrel.gov/publications.

```
|   Cub_1  /Sym      SWD3                                                    |Typ:    PQ                                          |
|   Cub_1  /Sym      YANMAR                0.00     0.00   1.00    0.00    0.00 |Typ:    PQ                                          |
|   Cub_1  /Tr2      T12                   0.00     0.00   1.00    0.00    0.00 |Tap:     3.00      Min:      1      Max:     5  |
|                    Total               -------  -------                      |                                                |
|                    Generation:           0.00     0.00                       |                                                |
|                                                                               |                                                |
|WBB(2)                                                                         |                                                |
|  W3 400V  0.40    1.00    0.40    0.00                                       |                                                |
|   Cub_1  /Sym      CAT C32               0.00     0.00   1.00    0.00    0.00 |Typ:    PQ                                          |
|   Cub_1  /Tr2      T14                   0.00     0.00   1.00    0.00    0.00 |Tap:     3.00      Min:      1      Max:     5  |
|                                                                               |                                                |
|WBB(3)                                                                         |                                                |
|  Waingapu20.00    1.00   19.91  149.52                                       |                                                |
|   Cub_1  /Lod      Waingapu Load         1.01     0.33   0.95    0.03        |Pl0:     1.01 MW   Ql0:   0.33 Mvar                |
|   Cub_1  /Lne      K-W Tline            -1.01    -0.33  -0.95    0.03    3.08 |Pv:      4.47 kW   cLod:  0.00 Mvar L:    7.00km|
|   Cub_1  /Tr2      T11                  -0.00     0.00  -1.00    0.00    0.00 |Tap:     3.00      Min:      1      Max:     5  |
|   Cub_1  /Tr2      T12                   0.00     0.00   1.00    0.00    0.00 |Tap:     3.00      Min:      1      Max:     5  |
|   Cub_1  /Tr2      T13                  -0.00     0.00  -1.00    0.00    0.00 |Tap:     3.00      Min:      1      Max:     5  |
|   Cub_1  /Tr2      T14                  -0.00    -0.00  -1.00    0.00    0.00 |Tap:     3.00      Min:      1      Max:     5  |
|                                                                               |                                                |
|WBB(4)                                                                         |                                                |
|  W2 400V  0.40    1.00    0.40    0.00                                       |                                                |
|   Cub_1  /Sym      DEUT Z-2              0.00    -0.00   1.00    0.00    0.00 |Typ:    PQ                                          |
|   Cub_1  /Tr2      T13                   0.00     0.00   1.00    0.00    0.00 |Tap:     3.00      Min:      1      Max:    5  |
|                                                                               |                                                |
|WBB                                                                            |                                                |
|  W1 400V  0.40    1.00    0.40    0.00                                       |                                                |
|   Cub_1  /Sym      DEUT Z-1              0.00    -0.00   1.00    0.00    0.00 |Typ:    PQ                                          |
|   Cub_1  /Tr2      T11                   0.00     0.00   1.00    0.00    0.00 |Tap:     3.00      Min:      1      Max:     5  |
|                                                                               |                                                |
|WTG01LV                                                                        |                                                |
|           0.69    1.08    0.75 -176.49                                       |                                                |
|   Cub_4  /Genstat  WTG01                 0.85     0.00   1.00    0.66  100.00 |                                                |
|   Cub_3  /Tr2      WTG01 Trafo           0.85     0.00   1.00    0.66   42.36 |Tap:     0.00      Min:     -2      Max:     2  |
|                                                                               |                                                |
-------------------------------------------------------------------------------------------------------------------------------
-------------------------------------------------------------------------------------------------------------------------------
| Grid: Sumba                System Stage: Sumba          | Study Case: KGL                       | Annex:                  / 4 |
-------------------------------------------------------------------------------------------------------------------------------
|           rated                          Active Reactive Power                |                                                |
|          Voltage     Bus-voltage         Power   Power   Factor Current Loading|                Additional Data                 |
|           [kV]  [p.u.]    [kV]   [deg]   [MW]   [Mvar]    [-]    [kA]    [%] |                                                |
-------------------------------------------------------------------------------------------------------------------------------
|WTG01LV(1)                                                                     |                                                |
|           0.69    1.08    0.75 -176.49                                       |                                                |
|   Cub_4  /Genstat  WTG02                 0.85     0.00   1.00    0.66  100.00 |                                                |
|   Cub_3  /Tr2      WTG01 Trafo(1)        0.85     0.00   1.00    0.66   42.36 |Tap:     0.00      Min:     -2      Max:     2  |
|                                                                               |                                                |
-------------------------------------------------------------------------------------------------------------------------------
-------------------------------------------------------------------------------------------------------------------------------
|                 |                                                          |   DIgSILENT   | Project:                    |
|                 |                                                          | PowerFactory  |-----------------------------
|                 |                                                          |    15.2.1     | Date:  9/28/2015            |
-------------------------------------------------------------------------------------------------------------------------------
-------------------------------------------------------------------------------------------------------------------------------
| Load Flow Calculation                Complete System Report: Substations, Voltage Profiles, Grid Interchange, Area Interchange|
-------------------------------------------------------------------------------------------------------------------------------
|     AC Load Flow, balanced, positive sequence              |    Automatic Model Adaptation for Convergence           No       |
```


This report is available at no cost from the National Renewable Energy Laboratory (NREL) at www.nrel.gov/publications.

```
|     Automatic Tap Adjust of Transformers            Yes    |    Max. Acceptable Load Flow Error for                          |
|     Consider Reactive Power Limits                  No     |       Nodes                                        0.01 kVA |
|                                                            |       Model Equations                              0.01 %   |
-------------------------------------------------------------------------------------------------------------------------------
-------------------------------------------------------------------------------------------------------------------------------
| Grid: Sumba                System Stage: Sumba           | Study Case: KGL                       | Annex:                  / 5 |
-------------------------------------------------------------------------------------------------------------------------------
|                     rtd.V      Bus - voltage                                        Voltage - Deviation [%]                   |
|                      [kV]  [p.u.]     [kV]  [deg]                -10         -5            0           +5         +10          |
-------------------------------------------------------------------------------------------------------------------------------
|HB(1)                                                                                                                        |
|  Haharu             20.00   1.081    21.62 152.18                                        |>>>>>>>>>>>>>>>>>>>>                |
|K-BB(1)                                                                                                                      |
|  K1 400V Bus         0.40   1.000     0.40   0.00                                        |                                    |
|K-BB(2)                                                                                                                      |
|  K3 400V Bus         0.40   1.000     0.40   0.00                                        |                                    |
|K-BB(3)                                                                                                                      |
|  K4 400V Bus         0.40   1.000     0.40   0.00                                        |                                    |
|K-BB(4)                                                                                                                      |
|  Kambajava          20.00   1.001    20.02 149.75                                        |                                    |
|K-BB(5)                                                                                                                      |
|  K4 400V Bus         0.40   0.989     0.40   0.80                                    <<<|                                    |
|K-BB                                                                                                                         |
|  K2 400V Bus         0.40   1.000     0.40   0.00                                        |                                    |
|KBB10                                                                                                                        |
|  K5 400V             0.40   1.000     0.40   0.00                                        |                                    |
|KBB11                                                                                                                        |
|  K6 400V             0.40   1.000     0.40   0.00                                        |                                    |
|KBB12                                                                                                                        |
|  K7 400V             0.40   1.000     0.40   0.00                                        |                                    |
|Single Busbar(3)                                                                                                             |
|  K-H2               20.00   1.018    20.36 150.41                                        |>>>>                                |
|WBB(1)                                                                                                                       |
|  W6.3kV              6.30   0.000     0.00   0.00                  <\\\\\\\\\\\\\\\\\\\\\\\\|                                |
|WBB(2)                                                                                                                       |
|  W3 400V             0.40   1.000     0.40   0.00                                        |                                    |
|WBB(3)                                                                                                                       |
|  Waingapu           20.00   0.996    19.91 149.52                                      <|                                    |
|WBB(4)                                                                                                                       |
|  W2 400V             0.40   1.000     0.40   0.00                                        |                                    |
|WBB                                                                                                                          |
|  W1 400V             0.40   1.000     0.40   0.00                                        |                                    |
|WTG01LV                                                                                                                      |
-------------------------------------------------------------------------------------------------------------------------------
-------------------------------------------------------------------------------------------------------------------------------
| Grid: Sumba                System Stage: Sumba           | Study Case: KGL                       | Annex:                  / 6 |
-------------------------------------------------------------------------------------------------------------------------------
|                     rtd.V      Bus - voltage                                        Voltage - Deviation [%]                   |
|                      [kV]  [p.u.]     [kV]  [deg]                -10         -5            0           +5         +10          |
-------------------------------------------------------------------------------------------------------------------------------
|                      0.69   1.085     0.75-176.49                                        |>>>>>>>>>>>>>>>>>>>>                |
|WTG01LV(1)                                                                                                                   |
|                      0.69   1.085     0.75-176.49                                        |>>>>>>>>>>>>>>>>>>>>                |
-------------------------------------------------------------------------------------------------------------------------------
-------------------------------------------------------------------------------------------------------------------------------
|                 |                                                          |   DIgSILENT   | Project:                    |
|                 |                                                          | PowerFactory  |-----------------------------
|                 |                                                          |    15.2.1     | Date:  9/28/2015            |
```


This report is available at no cost from the National Renewable Energy Laboratory (NREL) at www.nrel.gov/publications.

Load Flow Calculation	Complete System Report: Substations, Voltage Profiles, Grid Interchange, Area Interchange

AC Load Flow, balanced, positive sequence		Automatic Model Adaptation for Convergence	No
Automatic Tap Adjust of Transformers	Yes	Max. Acceptable Load Flow Error for	
Consider Reactive Power Limits	No	Nodes	0.01 kVA
		Model Equations	0.01 %

Grid: Sumba	System Stage: Sumba	Study Case: KGL	Annex: / 7

Volt. Level [kV]	Generation [MW]/ [Mvar]	Motor Load [MW]/ [Mvar]	Load [MW]/ [Mvar]	Compen-sation [MW]/ [Mvar]	External Infeed [MW]/ [Mvar]	Interchange to	Power Interchange [MW]/ [Mvar]	Total Losses [MW]/ [Mvar]	Load Losses [MW]/ [Mvar]	Noload Losses [MW]/ [Mvar]
0.40	1.20	0.00	0.00	0.00	0.00			0.00	0.00	0.00
	1.09	0.00	0.00	0.00	0.00			0.00	0.00	0.00
						20.00 kV	1.20	0.01	0.01	0.00
							1.09	0.04	0.04	0.00
0.48	0.00	0.00	0.00	0.00	0.00			0.00	0.00	0.00
	0.00	0.00	0.00	0.00	0.00			0.00	0.00	0.00
						0.80 kV	-0.01	0.00	0.00	0.00
							-0.03	-0.03	-0.03	0.00
						20.00 kV	0.01	0.01	0.00	0.01
							0.03	0.03	0.00	0.03
0.69	1.70	0.00	0.00	0.00	0.00			0.00	0.00	0.00
	0.00	0.00	0.00	0.00	0.00			0.00	0.00	0.00
						20.00 kV	1.70	0.01	0.01	0.00
							0.00	0.09	0.04	0.05
0.80	0.00	0.00	0.00	0.00	0.01			0.00	0.00	0.00
	0.00	0.00	0.00	0.00	0.00			0.00	0.00	0.00
						0.48 kV	0.01	0.00	0.00	0.00
							0.00	-0.03	-0.03	0.00
6.30	0.00	0.00	0.00	0.00	0.00			0.00	0.00	0.00
	0.00	0.00	0.00	0.00	0.00			0.00	0.00	0.00

Grid: Sumba	System Stage: Sumba	Study Case: KGL	Annex: / 8

Volt. Level [kV]	Generation [MW]/ [Mvar]	Motor Load [MW]/ [Mvar]	Load [MW]/ [Mvar]	Compen-sation [MW]/ [Mvar]	External Infeed [MW]/ [Mvar]	Interchange to	Power Interchange [MW]/ [Mvar]	Total Losses [MW]/ [Mvar]	Load Losses [MW]/ [Mvar]	Noload Losses [MW]/ [Mvar]
20.00	0.00	0.00	2.75	0.00	0.00			0.13	0.13	0.00
	0.00	0.00	0.92	0.00	0.00			0.05	0.06	-0.01
						0.40 kV	-1.19	0.01	0.01	0.00
							-1.06	0.04	0.04	0.00
						0.69 kV	-1.69	0.01	0.01	0.00
							0.09	0.09	0.04	0.05
Total:	2.90	0.00	2.75	0.00	0.01		0.00	0.16	0.15	0.01

This report is available at no cost from the National Renewable Energy Laboratory (NREL) at www.nrel.gov/publications.

```
|            1.09      0.00      0.92      0.00      0.00                        0.00       0.18       0.11      0.07          |
-------------------------------------------------------------------------------------------------------------------------------
-------------------------------------------------------------------------------------------------------------------------------
|                 |                                                          |   DIgSILENT   | Project:                    |
|                 |                                                          | PowerFactory  |-----------------------------
|                 |                                                          |    15.2.1     | Date:  9/28/2015            |
-------------------------------------------------------------------------------------------------------------------------------
-------------------------------------------------------------------------------------------------------------------------------
| Load Flow Calculation                Complete System Report: Substations, Voltage Profiles, Grid Interchange, Area Interchange|
-------------------------------------------------------------------------------------------------------------------------------
|     AC Load Flow, balanced, positive sequence              |    Automatic Model Adaptation for Convergence            No       |
|     Automatic Tap Adjust of Transformers           Yes     |    Max. Acceptable Load Flow Error for                              |
|     Consider Reactive Power Limits                 No      |       Nodes                                          0.01 kVA |
|                                                            |       Model Equations                                0.01 %   |
-------------------------------------------------------------------------------------------------------------------------------
-------------------------------------------------------------------------------------------------------------------------------
| Total System Summary                                   | Study Case: KGL                       | Annex:                  / 9 |
-------------------------------------------------------------------------------------------------------------------------------
|         Generation   Motor     Load     Compen-  External                  Inter Area      Total      Load     Noload          |
|                       Load              sation    Infeed                     Flow        Losses     Losses    Losses          |
|           [MW]/     [MW]/     [MW]/     [MW]/     [MW]/                     [MW]/       [MW]/      [MW]/     [MW]/          |
|          [Mvar]    [Mvar]    [Mvar]    [Mvar]    [Mvar]                    [Mvar]      [Mvar]     [Mvar]    [Mvar]          |
-------------------------------------------------------------------------------------------------------------------------------
| \pramod\Sumba-V3_HWLL_twoWTG_powerstore\Network Model\Network Data\Sumba                                                     |
|            2.90      0.00      2.75      0.00      0.01                      0.00          0.16       0.15      0.01          |
|            1.09      0.00      0.92      0.00      0.00                      0.00          0.18       0.11      0.07          |
-------------------------------------------------------------------------------------------------------------------------------
| Total:                                                                                                                       |
|            2.90      0.00      2.75      0.00      0.01                                    0.16       0.15      0.01          |
|            1.09      0.00      0.92      0.00      0.00                                    0.18       0.11      0.07          |
-------------------------------------------------------------------------------------------------------------------------------
-------------------------------------------------------------------------------------------------------------------------------
|                 |                                                          |   DIgSILENT   | Project:                    |
|                 |                                                          | PowerFactory  |-----------------------------
|                 |                                                          |    15.2.1     | Date:  9/28/2015            |
-------------------------------------------------------------------------------------------------------------------------------
-------------------------------------------------------------------------------------------------------------------------------
| Load Flow Calculation                Complete System Report: Substations, Voltage Profiles, Grid Interchange, Area Interchange|
-------------------------------------------------------------------------------------------------------------------------------
|     AC Load Flow, balanced, positive sequence              |    Automatic Model Adaptation for Convergence            No       |
|     Automatic Tap Adjust of Transformers           Yes     |    Max. Acceptable Load Flow Error for                              |
|     Consider Reactive Power Limits                 No      |       Nodes                                          0.01 kVA |
|                                                            |       Model Equations                                0.01 %   |
-------------------------------------------------------------------------------------------------------------------------------
-------------------------------------------------------------------------------------------------------------------------------
| Area: Kambajava                                        | Study Case: KGL                       | Annex:                  / 10|
-------------------------------------------------------------------------------------------------------------------------------
|   Volt. Generation   Motor     Load     Compen-  External                    Power       Total      Load     Noload          |
|   Level               Load              sation    Infeed    Interchange     Interchange   Losses     Losses    Losses          |
|           [MW]/     [MW]/     [MW]/     [MW]/     [MW]/        to              [MW]/       [MW]/      [MW]/     [MW]/          |
|   [kV]   [Mvar]    [Mvar]    [Mvar]    [Mvar]    [Mvar]                       [Mvar]      [Mvar]     [Mvar]    [Mvar]          |
-------------------------------------------------------------------------------------------------------------------------------
|   0.40      1.20      0.00      0.00      0.00      0.00                                  0.00       0.00      0.00          |
|             1.09      0.00      0.00      0.00      0.00                                  0.00       0.00      0.00          |
|                                                                  20.00 kV          1.20       0.01       0.01      0.00          |
|                                                                                    1.09       0.04       0.04      0.00          |
-------------------------------------------------------------------------------------------------------------------------------
|  20.00      0.00      0.00      1.69      0.00      0.00                                  0.00       0.00      0.00          |
```


This report is available at no cost from the National Renewable Energy Laboratory (NREL) at www.nrel.gov/publications.

	0.00	0.00	0.56	0.00	0.00			0.00	0.00	0.00	
						0.40 kV	-1.19	0.01	0.01	0.00	
							-1.06	0.04	0.04	0.00	
						Waingapu	1.01	0.00	0.00	0.00	
							0.33	0.00	0.01	-0.00	
Total:	1.20	0.00	1.69	0.00	0.00		-0.50	0.01	0.01	0.00	
	1.09	0.00	0.56	0.00	0.00		0.50	0.04	0.04	0.00	
						Waingapu	1.01	0.00	0.00	0.00	
							0.33	0.00	0.01	-0.00	

	DIgSILENT PowerFactory 15.2.1	Project:
		Date: 9/28/2015

Load Flow Calculation — Complete System Report: Substations, Voltage Profiles, Grid Interchange, Area Interchange

AC Load Flow, balanced, positive sequence		Automatic Model Adaptation for Convergence	No
Automatic Tap Adjust of Transformers	Yes	Max. Acceptable Load Flow Error for	
Consider Reactive Power Limits	No	Nodes	0.01 kVA
		Model Equations	0.01 %

Area: Waingapu | Study Case: KGL | Annex: / 11

Volt. Level [kV]	Generation [MW]/ [Mvar]	Motor Load [MW]/ [Mvar]	Load [MW]/ [Mvar]	Compen-sation [MW]/ [Mvar]	External Infeed [MW]/ [Mvar]	Interchange to	Power Interchange [MW]/ [Mvar]	Total Losses [MW]/ [Mvar]	Load Losses [MW]/ [Mvar]	Noload Losses [MW]/ [Mvar]
0.40	0.00	0.00	0.00	0.00	0.00			0.00	0.00	0.00
	0.00	0.00	0.00	0.00	0.00			0.00	0.00	0.00
6.30	0.00	0.00	0.00	0.00	0.00			0.00	0.00	0.00
	0.00	0.00	0.00	0.00	0.00			0.00	0.00	0.00
20.00	0.00	0.00	1.01	0.00	0.00			0.00	0.00	0.00
	0.00	0.00	0.33	0.00	0.00			0.00	0.00	0.00
						Kambajava	-1.01	0.00	0.00	0.00
							-0.33	0.00	0.01	-0.00
Total:	0.00	0.00	1.01	0.00	0.00		-1.01	0.00	0.00	0.00
	0.00	0.00	0.33	0.00	0.00		-0.33	0.00	0.01	-0.00
						Kambajava	-1.01	0.00	0.00	0.00
							-0.33	0.00	0.01	-0.00

	DIgSILENT PowerFactory 15.2.1	Project:
		Date: 9/28/2015

Load Flow Calculation — Complete System Report: Substations, Voltage Profiles, Grid Interchange, Area Interchange

AC Load Flow, balanced, positive sequence		Automatic Model Adaptation for Convergence	No
Automatic Tap Adjust of Transformers	Yes	Max. Acceptable Load Flow Error for	

This report is available at no cost from the National Renewable Energy Laboratory (NREL) at www.nrel.gov/publications.

Consider Reactive Power Limits	No	Nodes	0.01 kVA
		Model Equations	0.01 %

Area: Haharu	Study Case: KGL	Annex: / 12

Volt. Level [kV]	Generation [MW]/ [Mvar]	Motor Load [MW]/ [Mvar]	Load [MW]/ [Mvar]	Compen-sation [MW]/ [Mvar]	External Infeed [MW]/ [Mvar]	Interchange to	Power Interchange [MW]/ [Mvar]	Total Losses [MW]/ [Mvar]	Load Losses [MW]/ [Mvar]	Noload Losses [MW]/ [Mvar]
20.00	0.00	0.00	0.05	0.00	0.00			0.00	0.00	0.00
	0.00	0.00	0.03	0.00	0.00			0.00	0.00	0.00
						0.69 kV	-1.69	0.01	0.01	0.00
							0.09	0.09	0.04	0.05
Total:	0.00	0.00	0.05	0.00	0.00		-0.06	0.01	0.01	0.00
	0.00	0.00	0.03	0.00	0.00		-0.12	0.09	0.04	0.05

	DIgSILENT PowerFactory 15.2.1	Project:
		Date: 9/28/2015

Load Flow Calculation	Complete System Report: Substations, Voltage Profiles, Grid Interchange, Area Interchange

AC Load Flow, balanced, positive sequence		Automatic Model Adaptation for Convergence	No
Automatic Tap Adjust of Transformers	Yes	Max. Acceptable Load Flow Error for	
Consider Reactive Power Limits	No	Nodes	0.01 kVA
		Model Equations	0.01 %

Area Summaries	Study Case: KGL	Annex: / 13

	Generation [MW]/ [Mvar]	Motor Load [MW]/ [Mvar]	Load [MW]/ [Mvar]	Compen-sation [MW]/ [Mvar]	External Infeed [MW]/ [Mvar]	Inter Area Flow [MW]/ [Mvar]	Total Losses [MW]/ [Mvar]	Load Losses [MW]/ [Mvar]	Noload Losses [MW]/ [Mvar]
\pramod\Sumba-V3_HWLL_twoWTG_powerstore\Network Model\Network Data\Areas\Kambajava									
	1.198	0.000	1.691	0.000	0.000	-0.50	0.01	0.01	0.00
	1.095	0.000	0.556	0.000	0.000	0.50	0.04	0.04	0.00
\pramod\Sumba-V3_HWLL_twoWTG_powerstore\Network Model\Network Data\Areas\Waingapu									
	0.000	0.000	1.009	0.000	0.000	-1.01	0.00	0.00	0.00
	0.000	0.000	0.332	0.000	0.000	-0.33	0.00	0.01	-0.00
\pramod\Sumba-V3_HWLL_twoWTG_powerstore\Network Model\Network Data\Areas\Haharu									
	0.000	0.000	0.051	0.000	0.000	-0.06	0.01	0.01	0.00
	0.000	0.000	0.032	0.000	0.000	-0.12	0.09	0.04	0.05

This report is available at no cost from the National Renewable Energy Laboratory (NREL) at www.nrel.gov/publications.

Appendix D: List of Dynamic Models

This report is available at no cost from the National Renewable Energy Laboratory (NREL) at www.nrel.gov/publications.

Table of Contents

Wind Turbine Generator Model **129**
Governor Model (GAST) **132**
IEEET1: AVR Model **133**

This report is available at no cost from the National Renewable Energy Laboratory (NREL) at www.nrel.gov/publications.

List of Figures

Figure D-1. WTG detailed control model 131
Figure D-2. GAST detailed control model 132
Figure D-3. IEEET1 detailed control model 134

This report is available at no cost from the National Renewable Energy Laboratory (NREL) at www.nrel.gov/publications.

Wind Turbine Generator Model

```
-------------------------------------------------------------------------------
|Grid:Sumba          Syst.Stage:Sumba          | Annex:                  / 125|
-------------------------------------------------------------------------------
|(WTG) 01 V52 DSL                      Common Model                  1   /10  |
-------------------------------------------------------------------------------
|Model Definition                     ...\Library\V52-0.85 MW VCS 50 Hz V7.5.0 |
|Out of Service                       No                                       |
|A-stable integration algorithm       No                                       |
|Characteristic Name                                                           |
|Data source                          MAN                                      |
|Foreign Key                                                                   |
|Description                                                                   |
|Approval Information                                                          |
|   Status                            Not Approved                             |
|   Modified                                                12/31/1969 7:00:00 PM
|   Modified by                                                                |
|                                                                              |
| Parameter                                                                    |
|   S_Rated  : Base Power [VA]                                     850000.0000 |
|   Nunits  : Number of Units in wind Park [-]                          1.0000 |
|   TauFud  :(Meas.) Shaft Speed Filter Time Constant [s]               0.1000 |
|   TauP   :(Meas.) Active Power Filter Time Constant [s]               0.1000 |
|   TauQ   :(Meas.) Reactive Power Filter Time Constant [s]             0.1000 |
|   Kp     :(Gen. Control) Power Controller Proportional Gain [-]       3.0025 |
|   Ki     :(Gen. Control) Power Controller Integral gain [-]           8.3264 |
|   Kud    :(Gen. Control) Torsion damper Gain [A/rad/s]              100.0000 |
|   Taucud  :(Gen. Control) Torsion damper Time Constant [s]            0.4000 |
|   RatedRotorInv  :Rated Rotor Inverter Current [A]                   450.0000 |
|   IRRated  :(Gen. Control) Rated Rotor Current [A]                   380.8300 |
|   Winding_Ratio  :(Generator) Nrotor/Nstator [-]                       2.6300 |
|   Xm     :(Generator) Magnetizing Reactance [Ohm]                      1.9700 |
|   Xls    :(Generator) Stator leakage reactance [Ohm]                   0.0420 |
|   U_Rated  : Base Voltage [V]                                        690.0000 |
|   Rs     :(Generator) Stator resistance [Ohm]                          0.0029 |
|   Xlr    :(Generator) Rotor leakage reactance [Ohm]                    0.0430 |
|   Vrmax  :(Generator) Maximum Rotor Voltage (referred to the stator) [V]43 |
|   w1     :(Grid) Nominel Grid Pulsation [rad/s]                      314.1593 |
|   Tfaultclear  :(LVRT Logic) Voltage recovery time constant [s]       0.0600 |
|   Xs     :(Generator) Stator reactance [Ohm]                           2.0120 |
|   Xr     :(Generator) Rotor reactance [Ohm]                            2.0130 |
|   Xss    :(Generator) Transient reactance [Ohm]                        0.0840 |
|   T0     :(Generator) Transient open-circuit time constant [s]         2.0600 |
|   AGO_enable  :(Protection) LVRT Enable/Disable [1/0]                  1.0000 |
|   ULVRT1  :(Protection) LVRT Voltage Limit Stage 1 [pu]                0.0000 |
|   TLVRT1  :(Protection) LVRT Voltage Timeout Stage 1 [s]               0.3000 |
|   ULVRT2  :(Protection) LVRT Voltage Limit Stage 2 [pu]                0.7000 |
|   TLVRT2  :(Protection) LVRT Voltage Timeout Stage 2 [s]               2.6500 |
|   ULVRT3  :(Protection) LVRT Voltage Limit Stage 3 [pu]                0.8500 |
|   TLVRT3  :(Protection) LVRT Voltage Timeout Stage 3 [s]              11.0000 |
|   ULVRT4  :(Protection) LVRT Voltage Limit Stage 4 [pu]                0.9000 |
|   TLVRT4  :(Protection) LVRT Voltage Timeout Stage 4 [s]              60.0000 |
|   UV1    :(Protection) Under Voltage Limit Stage 1 [pu]                0.9000 |
|   Tuv1   :(Protection) Under Voltage Timeout Stage 1 [s]              60.0000 |
|   UV2    :(Protection) Under Voltage Limit Stage 2 [pu]                0.8500 |
|   Tuv2   :(Protection) Under Voltage Timeout Stage 2 [s]              11.0000 |
|   UV3    :(Protection) Under Voltage Limit Stage 3 [pu]                0.8500 |
|   Tuv3   :(Protection) Under Voltage Timeout Stage 3 [s]              11.0000 |
|   OV1    :(Protection) Over Voltage Limit Stage 1 [pu]                 1.1000 |
|   Tov1   :(Protection) Over Voltage Timeout Stage 1 [s]               60.0000 |
|   OV2    :(Protection) Over Voltage Limit Stage 2 [pu]                 1.1800 |
|   Tov2   :(Protection) Over Voltage Timeout Stage 2 [s]                2.0000 |
|   OV3    :(Protection) Over Voltage Limit Stage 3 [pu]                 1.2000 |
|   Tov3   :(Protection) Over Voltage Timeout Stage 3 [s]                0.0800 |
|   UF1    :(Protection) Low Frequency Limit [Hz]                       47.0000 |
|   Tuf1   :(Protection) Low Frequency Timeout [s]                       0.2000 |
|   OF1    :(Protection) High Frequency Limit [Hz]                      53.0000 |
|   Tof1   :(Protection) High Frequency Timeout [s]                      0.2000 |
|   Prot_enable  :(Protection) Trip Enable/Disable [1/0]                 1.0000 |
|   Krg    :(Drive Train) Shaft Stiffness [Nm/rad]                    6002.0000 |
|   Drg    :(Drive Train) Shaft damping [Nm/rad/s]                      24.7000 |
|   Wgen   :(Drive Train) Nominal Shaft Speed [rad/s]                  387.4631 |
|   Jgen   :(Drive Train) Generator Inertia [Kgm2]                      31.0000 |
|   Jrot   :(Drive Train) Turbine Rotor Inertia [Kgm2]                 158.0000 |
|   ModeSel  :(PQ Limits) PF(=1)or Q(=0) Mode Selector [-]               0.0000 |
|   PFmin_cap  :(PQ Chart) Min Power Factor,Capacitive [-]               0.2000 |
|   PFmin_ind  :(PQ Chart) Min Power Factor,Inductive [-]               -0.2000 |
|   Qmax_cap  :(PQ Chart) Max Q,Capacitive [pu]                          0.5882 |
|   Qmax_ind  :(PQ Chart) Max Q,Inductive [pu]                          -0.5882 |
```


This report is available at no cost from the National Renewable Energy Laboratory (NREL) at www.nrel.gov/publications.

```
|   PFmax_cap  :(PQ Chart) Max Power Factor,Capacitive [-]            0.9800   |
|   PFmax_ind  :(PQ Chart) Max Power Factor,Inductive [-]            -0.9500   |
|   PQmax_cap  :(PQ Chart) PQ Corner,Capacitive [pu]                  0.6056   |
|   PQmax_ind  :(PQ Chart) PQ Corner,Inductive [pu]                   0.8405   |
|   dPmin  :(PQ Limits) Minimum Slope Limit P ref. [pu/s]           -10.0000   |
|   dPmax  :(PQ Limits) Maximum Slope Limit P ref. [pu/s]             1.0000   |
|   TauPref  :(PQ Limits) Filter Time Constant P ref. [s]             0.1000   |
|   TauQref  :(PQ Limits) Filter Time Constant Q ref [s]              0.1000   |
|   F_GS   :(LVRT Logic) WTG type DFIG(=0)/Full Scale (=1) [1/0]      0.0000   |
|   RegainPQdelay  :(LVRT Logic) PQ Control Delay [s]                 0.2000   |
|   RTUdip  :(LVRT Logic) Parameter IRD Calculation [pu]              0.5000   |
|   RTIreac  :(LVRT Logic) Parameter IRD Calculation [pu]             1.0000   |
|   Tsdfigwashout  :(LVRT Logic) Washout Filter Time Constant [s]     0.0160   |
|   Ttimeout  :(LVRT Logic) NO (SDFIG=2) timeout [s]                  3.0000   |
|   Tbco   :(LVRT Logic) BCO duration [s]                             0.0250   |
|   Tsrvo  :(LVRT Logic) SRVO duration [s]                            0.0200   |
|   Ubco   :(LVRT Logic) BCO triggering level [pu]                    0.3500   |
|   Usrvo  :(LVRT Logic) SRVO triggering level [pu]                   0.2500   |
|   Tmeas  :(LVRT Logic) Voltage measurement time constant [s]        0.0100   |
|   Ird_ramplim_neg  :(LVRT Logic) IRD negative ramp limit [pu]     -16.8300   |
|   Ird_ramplim_pos  :(LVRT Logic) IRD positive ramp limit [pu]      40.0000   |
|   Irq_ramplim_neg  :(LVRT Logic) IRQ negative ramp limit [pu]     -67.3350   |
|   Irq_ramplim_pos  :(LVRT Logic) IRQ positive ramp limit [pu]      67.3350   |
|   LIP    :(LVRT Logic) IRQ (active power limit during current control [pu]   |
|   Ugrid_delay  :(LVRT Logic) Voltage measurement time delay (Full Scale [s]  |
|   Imag_comp_factor  :(LVRT Logic) Parameter Magnetisation compensation factor
|   G_Angle                                                          80.0000   |
|   SCR                                                              10.0000   |
|                                                                              |
| Characteristics                                                              |
|                                                                              |
|                                                                              |
|                              Net Element            Signal Name              |
|                                                                              |
-------------------------------------------------------------------------------
```


This report is available at no cost from the National Renewable Energy Laboratory (NREL) at www.nrel.gov/publications.

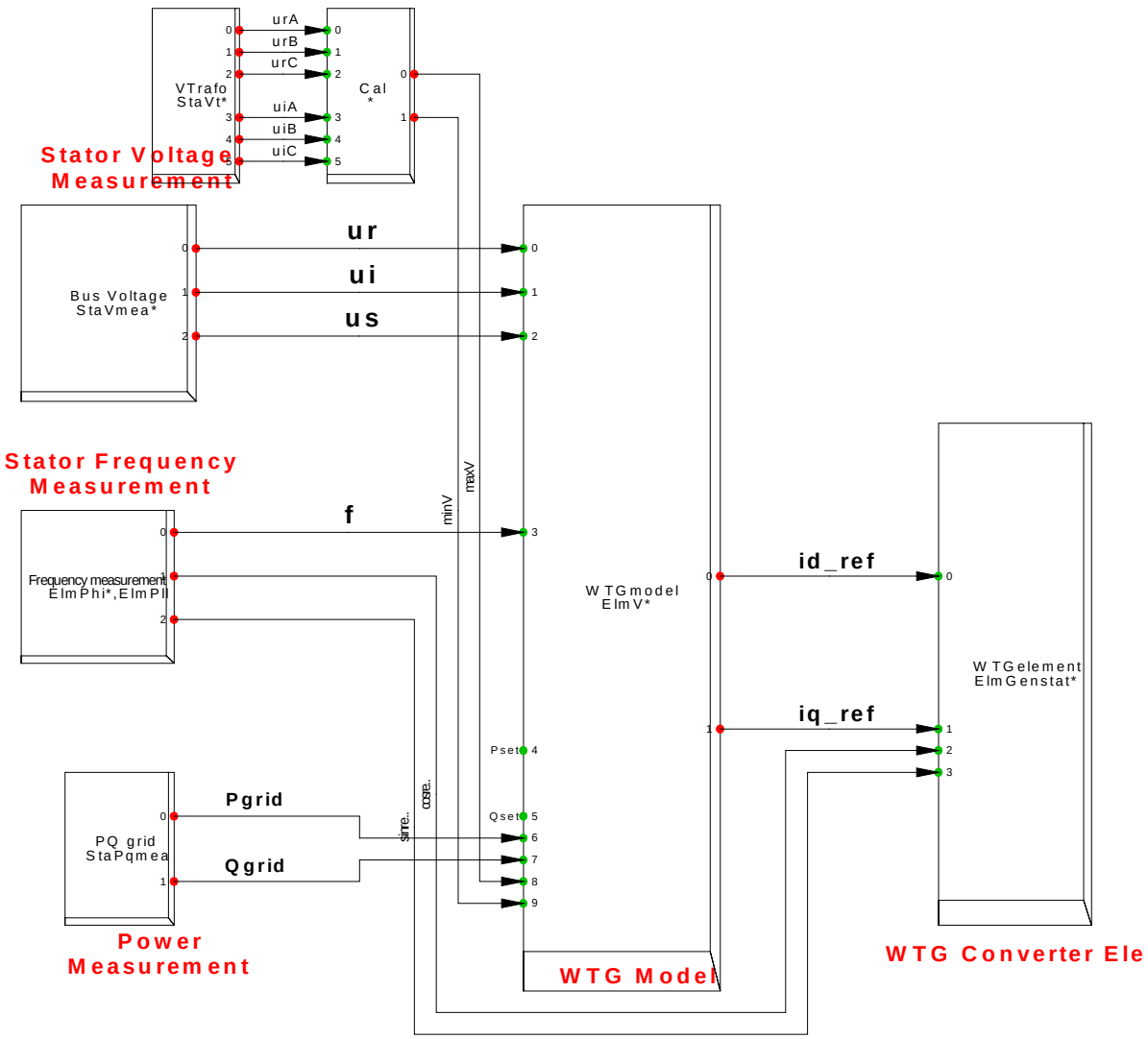

Figure D-1. WTG detailed control model

This report is available at no cost from the National Renewable Energy Laboratory (NREL) at www.nrel.gov/publications.

Governor Model (GAST)

The governor model was used in all generators.

```
-------------------------------------------------------------------------------
|Grid:Sumba          Syst.Stage:Sumba          | Annex:                  / 315|
-------------------------------------------------------------------------------
|GAST                                   Common Model                  18  /38  |
-------------------------------------------------------------------------------
|Model Definition                     ...\Library\User Defined Models\gov_GAST |
|Out of Service                       No                                       |
|A-stable integration algorithm       No                                       |
|Characteristic Name                                                           |
|Data source                          MAN                                      |
|Foreign Key                                                                   |
|Description                                                                   |
|Approval Information                                                          |
|   Status                            Not Approved                             |
|   Modified                                          11/18/2013 4:11:49 AM    |
|   Modified by                       Administrator                            |
|                                                                              |
| Parameter                                                                    |
|   R     Speed Droop [pu]                                            0.0470   |
|   T1    Controller Time Constant [s]                                0.4000   |
|   T2    Actuator Time Constant [s]                                  0.1000   |
|   T3    Compressor Time Constant [s]                                3.0000   |
|   AT    Ambient Temperature Load Limit [pu]                         1.0000   |
|   Kt    Turbine Factor [pu]                                         2.0000   |
|   Dturb frictional losses factor pu [pu]                            0.0000   |
|   PN    Turbine Rated Power(=0->PN=Pgnn) [MW]                       0.0000   |
|   Vmin  Controller Minimum Output [pu]                              0.0000   |
|   Vmax  Controller Maximum Output [pu]                              1.0000   |
|                                                                              |
| Characteristics                                                              |
|                                                                              |
|                                                                              |
|                              Net Element            Signal Name              |
|                                                                              |
-------------------------------------------------------------------------------
```

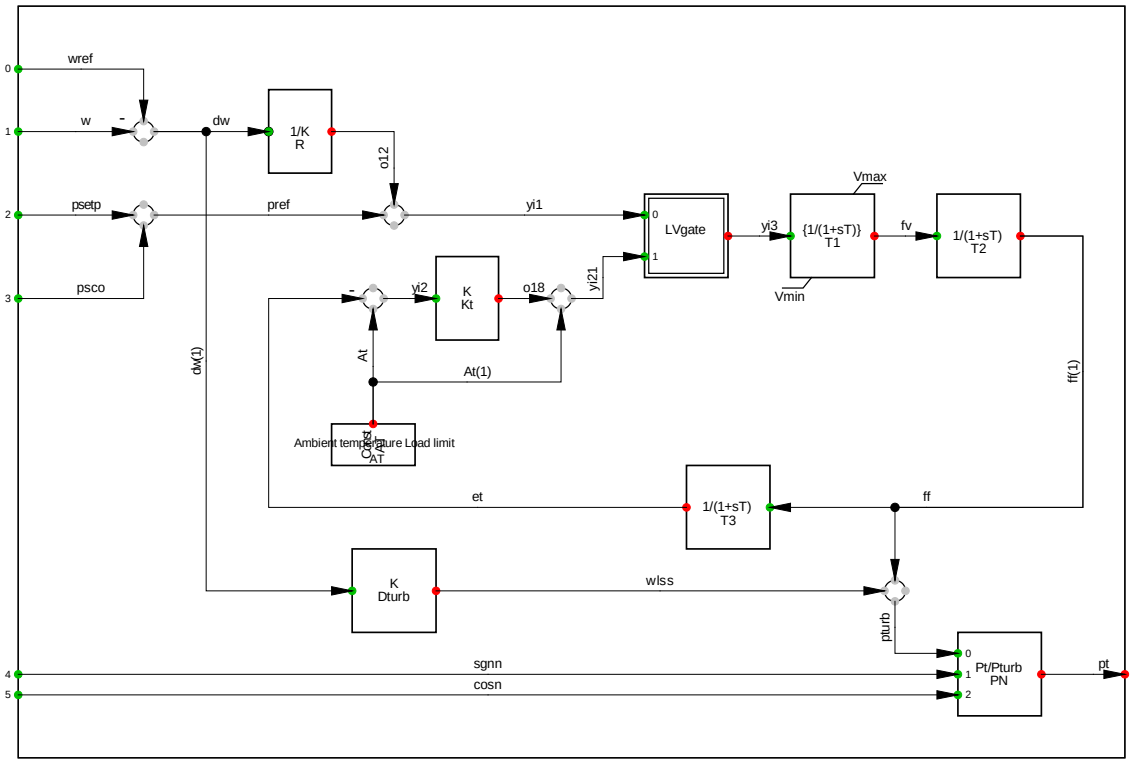

Figure D-2. GAST detailed control model

This report is available at no cost from the National Renewable Energy Laboratory (NREL) at www.nrel.gov/publications.

IEEET1: AVR Model

The governor model was used in all generators.

```
-------------------------------------------------------------------------------
|Grid:Sumba          Syst.Stage:Sumba          | Annex:                  / 131|
-------------------------------------------------------------------------------
|IEEET1                                  Common Model                  6   /10  |
-------------------------------------------------------------------------------
|Model Definition                     \Library\Standard Models\avr_IEEET1      |
|Out of Service                       No                                       |
|A-stable integration algorithm       No                                       |
|Characteristic Name                                                           |
|Data source                          MAN                                      |
|Foreign Key                                                                   |
|Description                                                                   |
|Approval Information                                                          |
|   Status                            Not Approved                             |
|   Modified                                                3/21/2015 7:58:32 PM|
|   Modified by                       pramod                                   |
|                                                                              |
| Parameter                                                                    |
|   Tr    Measurement Delay [s]                                        0.0200  |
|   Ka    Controller Gain [pu]                                       200.0000  |
|   Ta    Controller Time Constant [s]                                 0.0300  |
|   Ke    Exciter Constant [pu]                                        1.0000  |
|   Te    Exciter Time Constant [s]                                    0.2000  |
|   Kf    Stabilization Path Gain [pu]                                 0.0500  |
|   Tf    Stabilization Path Time Constant [s]                         1.5000  |
|   E1    Saturation Factor 1 [pu]                                     3.9000  |
|   Se1   Saturation Factor 2 [pu]                                     0.1000  |
|   E2    Saturation Factor 3 [pu]                                     5.2000  |
|   Se2   Saturation Factor 4 [pu]                                     0.5000  |
|   Vrmin Controller Output Minimum [pu]                             -10.0000  |
|   Vrmax Controller Output Maximum [pu]                              10.0000  |
|                                                                              |
| Characteristics                                                              |
|                                                                              |
|                                                                              |
|                            Net Element            Signal Name                |
|                                                                              |
-------------------------------------------------------------------------------
```


This report is available at no cost from the National Renewable Energy Laboratory (NREL) at www.nrel.gov/publications.

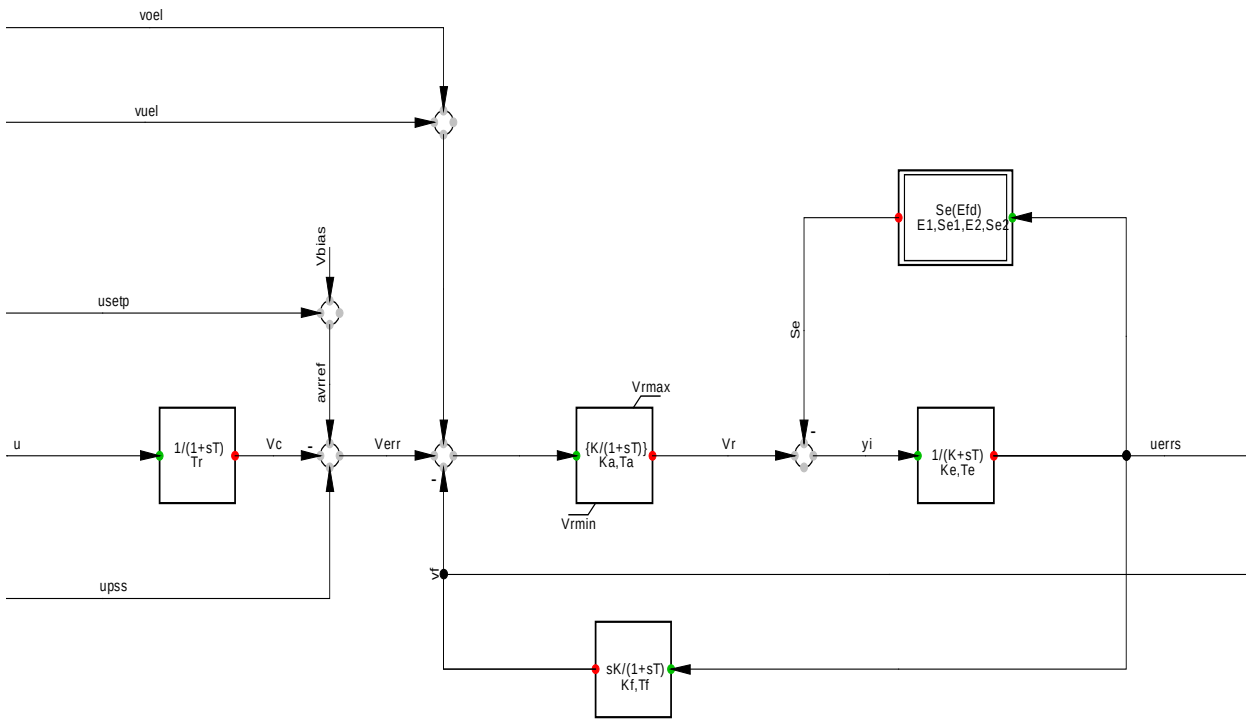

Figure D-3. IEEET1 detailed control model

This report is available at no cost from the National Renewable Energy Laboratory (NREL) at www.nrel.gov/publications.

Appendix E: Steady-State and Dynamic System Modeling for the Integration of One 850-kW Wind Turbine Generator

This 115 MB file is available at http://www.nrel.gov/docs/fy16osti/65458-E.pdf

This report is available at no cost from the National Renewable Energy Laboratory (NREL) at www.nrel.gov/publications.

Appendix F: Report 1—Dynamic System Impact Study by ABB

This report is available at no cost from the National Renewable Energy Laboratory (NREL) at www.nrel.gov/publications.

SYSTEM IMPACT STUDIES OF WIND TURBINE CONNECTION IN SUMBA ISLAND, INDONESIA

Report 1. Dynamic study

DOCUMENT Nº: 15SV00931S01R00

EDITION: 1, Rev 0

June 2015

Asea Brown Boveri, S.A.

San Romualdo, 13; E-28037 Madrid (España)
Tel.: +34 91 581 93 93 / Fax: +34 91 581 56 90
www.abb.com

REVISION HISTORY

Edition nº	Description	Date
1, Rev. 0	Document. First edition	01-06-2015

	Performed	Revised	Approved
Name	LdA, FDF	JM	IRN
Date	02/06/2015	03/06/2015	03/06/2015

INDEX

1. OBJECT AND SCOPE 1-1

2. NETWORK MODEL 2-1

2.1. SCENARIO 1 MODEL 2-1

2.2. SCENARIO 2 MODEL 2-2

3. STUDY CASES 3-1

4. CRITERIA 4-1

5. STABILITY ANALYSIS 5-1

5.1. SCENARIO 1 ANALYSIS 5-1

5.1.1. LOSS OF DIESEL GENERATOR WITH HIGH LOAD 5-1

5.1.2. LOSS OF LOAD WITH HIGH LOAD 5-2

5.1.3. LOSS OF WIND GENERATOR WITH HIGH LOAD 5-2

5.1.4. LOSS OF DIESEL GENERATOR WITH LOW LOAD 5-6

5.1.5. LOSS OF LOAD WITH LOW LOAD 5-6

5.1.6. LOSS OF WIND GENERATOR WITH LOW LOAD 5-7

5.2. SCENARIO 2 ANALYSIS 5-11

5.2.1. LOSS OF DIESEL GENERATOR WITH HIGH LOAD 5-11

5.2.2. LOSS OF LOAD WITH HIGH LOAD 5-12

5.2.3. LOSS OF WIND GENERATOR WITH HIGH LOAD 5-12

5.2.4. LOSS OF DIESEL GENERATOR WITH LOW LOAD 5-16

5.2.5. LOSS OF LOAD WITH LOW LOAD 5-16

5.2.6. LOSS OF WIND GENERATOR WITH LOW LOAD 5-17

6. INTERCONNECTION LINE EVALUATION 6-21

7. CONCLUSIONS AND RECOMMENDATIONS 7-1

1. OBJECT AND SCOPE

This report shows the dynamic studies conducted on the power grid of the Sumba Island in Indonesia in order to estimate the impact of the commissioning of a wind turbine park in the system.

The study is divided into two scenario. The first scenario studies the impact of the introduction of a 850 kW wind turbine in the grid of the island that will be scheduled for 2016. The second scenario studies the impact of the introduction of four more 850 kW wind turbine in the east of the island grid and the interconnection of this network with the network of west side of the island by a 92 km overhead line that will be scheduled for 2018.

Is proposed for both scenarios the use of an equipment to provide support to the system stability during transient events. Two technologies are proposed for the selection of this equipment, battery banks and Flywheel.

Figure 1 shows the Sumba Island grid with two separate areas (east and west) and a future grid interconnection between both areas.

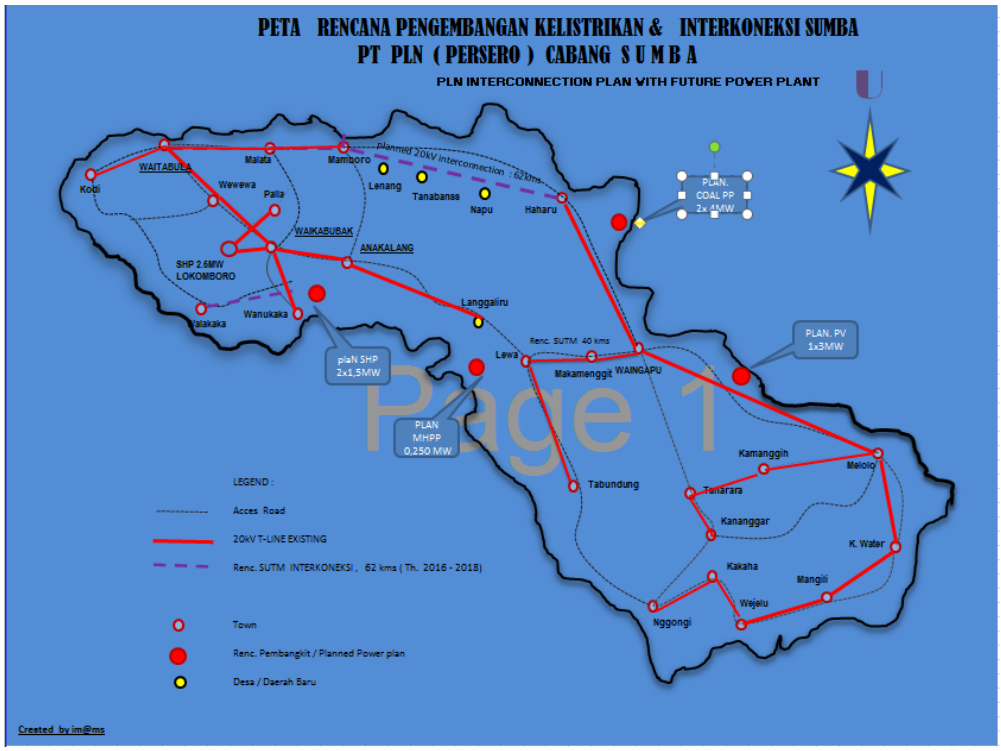

Figure 1. Sumba Island grid

2. NETWORK MODEL

Two electrical models for the software tool DigSilent PowerFactory V 15.2 has been provided by the client at the kick-off meeting. The model represents both scenarios and it has been updated in accordance with the data provided to be suitable for the current studies.

The objective of this chapter is to indicate the main elements included in both models. The information concerning this grid has been provided by the client in several emails.

2.1. SCENARIO 1 MODEL

For the scenario 1 just the east side of the grid was included in the model. The model is composed for three main 20 kV substations, Kambajava, Waingapu and Haharu. There are one 850 kW wind turbine on the Kambajava substation and 7412.5 kVA of installed capacity of diesel generation on the Waingapu and Haharu substations. There are also a maximum load capacity of 5682 kW distributed around the system.

Figure 2 shows the Sumba grid model used for the studies of the scenario 1.

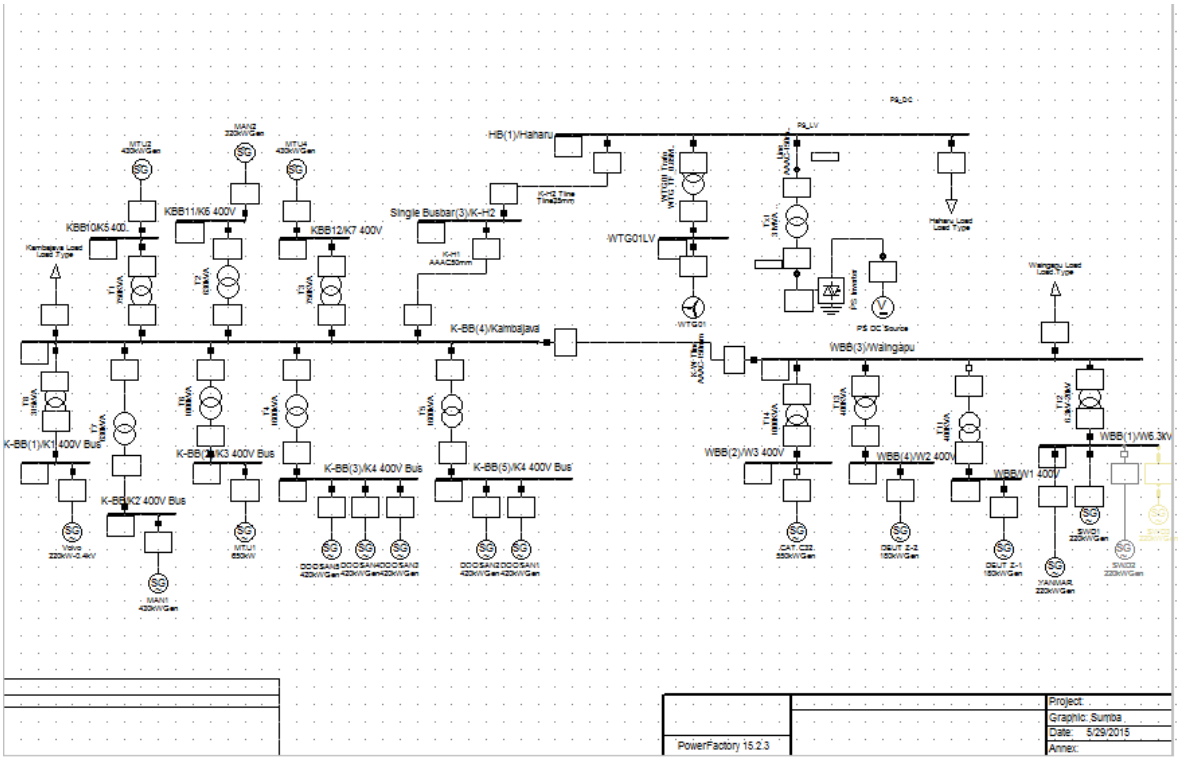

Figure 2. Sumba grid model for scenario 1

2.2. SCENARIO 2 MODEL

For the scenario 2, the east and the west side of the grid was included in the model. The east side is composed for the three main 20 kV substations used on scenario 1, Kambajava, Waingapu and Haharu. And the west side is composed by other three 20 kV substation, Waitabula, Waikabubak and Lokomboro. This model deals with the diesel generation of the whole grid in a consolidated manner in order to facilitate the computer work required.

There are five 850 kW wind turbines on the Kambajava substation (4250 kW of total wind capacity), 6725 kVA of installed capacity of diesel generation on the other east side substations and 8450 kVA of installed capacity of diesel generation on the west side substations. There are also a maximum load capacity of 6876 kW distributed around the east side and 8393 kW distributed around the west side.

Both sides are interconnected with a 92 km overhead line between the Kambajava and the Waitabula substation.

Figure 3 shows the Sumba grid model used for the studies of the scenario 2.

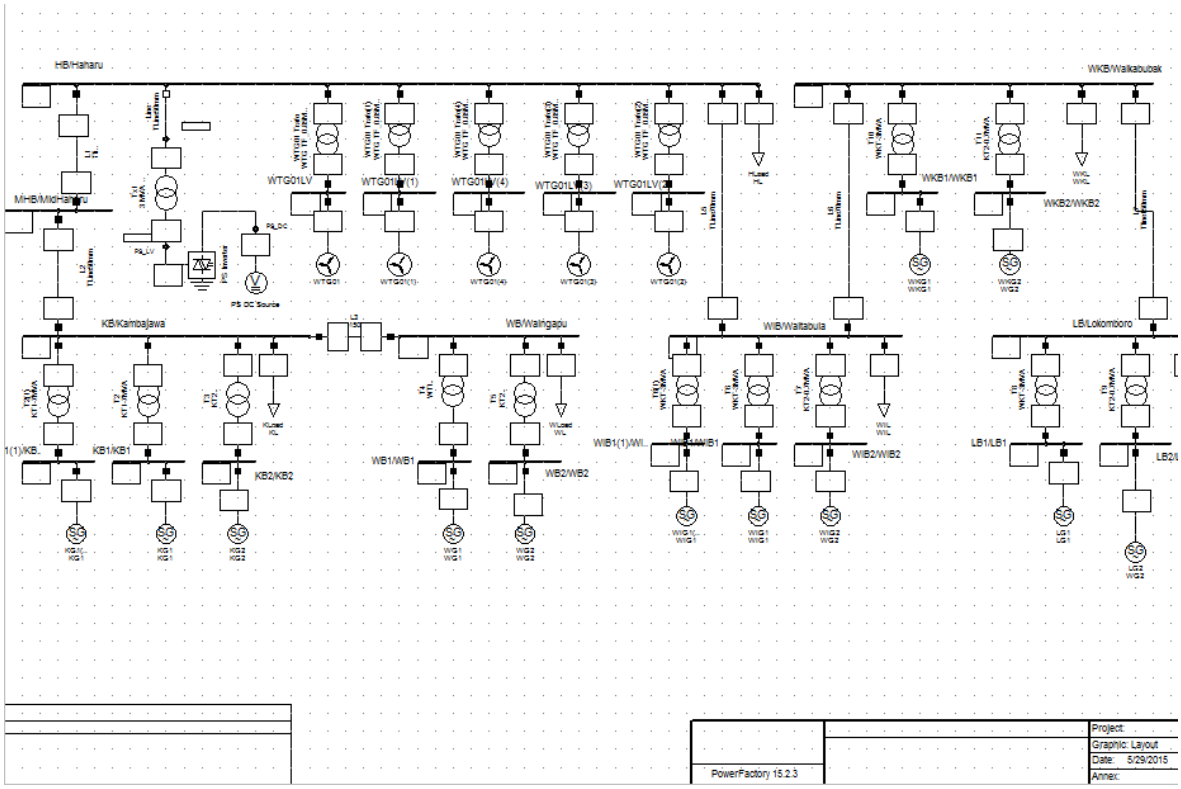

Figure 2. Sumba grid model for scenario 2

3. STUDY CASES

Three different study cases have been evaluated considering the energy storage solution in and out of service and different operation conditions.

The three study cases have been selected by considered the most extreme cases in a design stage n-1 contingency. The three selected stud cases are:

1. Loss of the largest diesel generator that would be in operation.
2. Loss of the largest load block of the system.
3. Sudden drop of wind, which results in simultaneous loss of all wind generation that would be in operation.

According to the loading description provided by the client, two different loading scenarios have been defined, High Load (HL) and Low Load (LL) scenarios.

Each of the three case studies will be evaluated taking into account the two load levels set (HL and LL) and also all this raised for both future scenarios (2016 and 2018). All this gives a total of 12 simulations to be analyzed.

For all configurations, the use of an equipment to provide support to the system stability also was considered in order to select between battery banks and Flywheel. That means duplicate the number of simulations to be analyzed.

4. CRITERIA

Based on the documents and the information exchanged with the client, this chapter summarizes the main criteria for the studies.

- Total Priority is given to wind generation over diesel generation whenever the wind is available.
- The utilization voltage to be considered in this study shall be 400 V for diesel generation, 690 V for wind generation and 20 kV for the power grid.
- The voltage operation limits are defined on ±10% of the nominal voltages.
- The limits of low voltage operation for the wind turbine are defined on 0,9 p.u. during 60 s and 0,85 p.u. during 11 s.
- The limits of High voltage operation for the wind turbine are defined on 1,1 p.u. during 60 s, 1,15 p.u. during 2 s and 1,2 p.u. during 80 ms.
- The limits of low frequency operation for the wind turbine are defined on 47 Hz during 200 ms.
- The limits of high frequency operation for the wind turbine are defined on 53 Hz during 200 ms.
- The limits of voltage operation for the diesel generation are defined between 0,9 to 1,1 p.u.
- The limits of frequency operation for the diesel generation are defined between 47 to 53 Hz.

5. STABILITY ANALYSIS

The main purpose of this chapter is to validate the system frequency stability in terms of loading levels and the characteristics of the wind turbines.

The evaluation is done from a system perspective considering the study cases defined in chapter 3. All cases were simulated with and without using a stability support equipment. For all simulations, the contingency occurs at t = 0.5 s. The start-up time of backup generators is limited by the client. For these simulations was taken 10 s for time of cold start-up, but the results are equally applicable to times of start-up higher as discussed in the conclusions.

All simulation result are shown after each analysis by figures. Each figures show graphics (from the top to the bottom) for bus voltage, system frequency, diesel active power and at the last graphic the wind power and the stability support equipment power. Left side of the figures show the graphics simulation using the stability support equipment and the right side show the graphics simulation without using it.

5.1. SCENARIO 1 ANALYSIS

For scenario 1, just the east side of the grid are analyzed using the load and generation expected at 2016. All figures are shown after the whole analysis in order to facilitate reading comprehension.

5.1.1. LOSS OF DIESEL GENERATOR WITH HIGH LOAD

In this event the loss of the largest diesel generator (650 kW) is simulated, then the stability support equipment supplies power (400 kW) for a few seconds until it comes into operation another 550 kW diesel generator and stabilizes the system.

Figure 4 shows how the frequency decreases but is stopped by the action of the stabilizer equipment until comes the backup generator and then the load is shared between the both. When the stabilizer equipment provides no more power, the frequency goes down but is stabilized within acceptable values range (48.65 Hz). The voltages are also kept within the allowable range (between 0.99 to 1.03 p.u.). So the system is stable for this case.

Without the use of the stability support equipment, the system does not withstand the contingency because the frequency drops so sharply that the wind generator is also lost and there is not enough time to put in service the backup generator.

5.1.2. LOSS OF LOAD WITH HIGH LOAD

In this event the loss of the largest load (3494 kW) is simulated, then the stability support equipment absorbs power (200 kW) for a few seconds and stabilizes the system.

Figure 5 show how the frequency increases but it remains within acceptable values. When the equipment absorbs no more power, the frequency goes up again but is stabilized within acceptable values (51.6 Hz). The voltages are also kept within the allowable range (between 1.01 to 1.06 p.u.). So the system is stable for this case.

Without the use of the stability support equipment, the system withstand the contingency because the generators change their operation point fast enough to compensate for the loss of load. So the use of the stability support equipment is not decisive for the system stability in this case.

5.1.3. LOSS OF WIND GENERATOR WITH HIGH LOAD

In this event the loss of the wind turbine (850 kW) is simulated, then the stability support equipment supplies power (400 kW) for a few seconds until it comes into operation another 550 kW diesel generator and stabilizes the system.

Figure 6 shows how the frequency decreases but is stopped by the actions of the stabilizer equipment until comes the backup generator and then the load is shared between the both. When the equipment provides no more power, the frequency goes down but is stabilized within acceptable values. The frequency is stabilized at a lower value (47.65 Hz) than that obtained in 5.1.1 because the generation loss is greater. The voltages are also kept within the allowable range (between 0.99 to 1 p.u.). So the system is stable for this case.

Without the use of the stability support equipment, the system does not support because the frequency drops so sharply that the backup generator does not have enough power to compensate the loss generation and stabilize the system frequency.

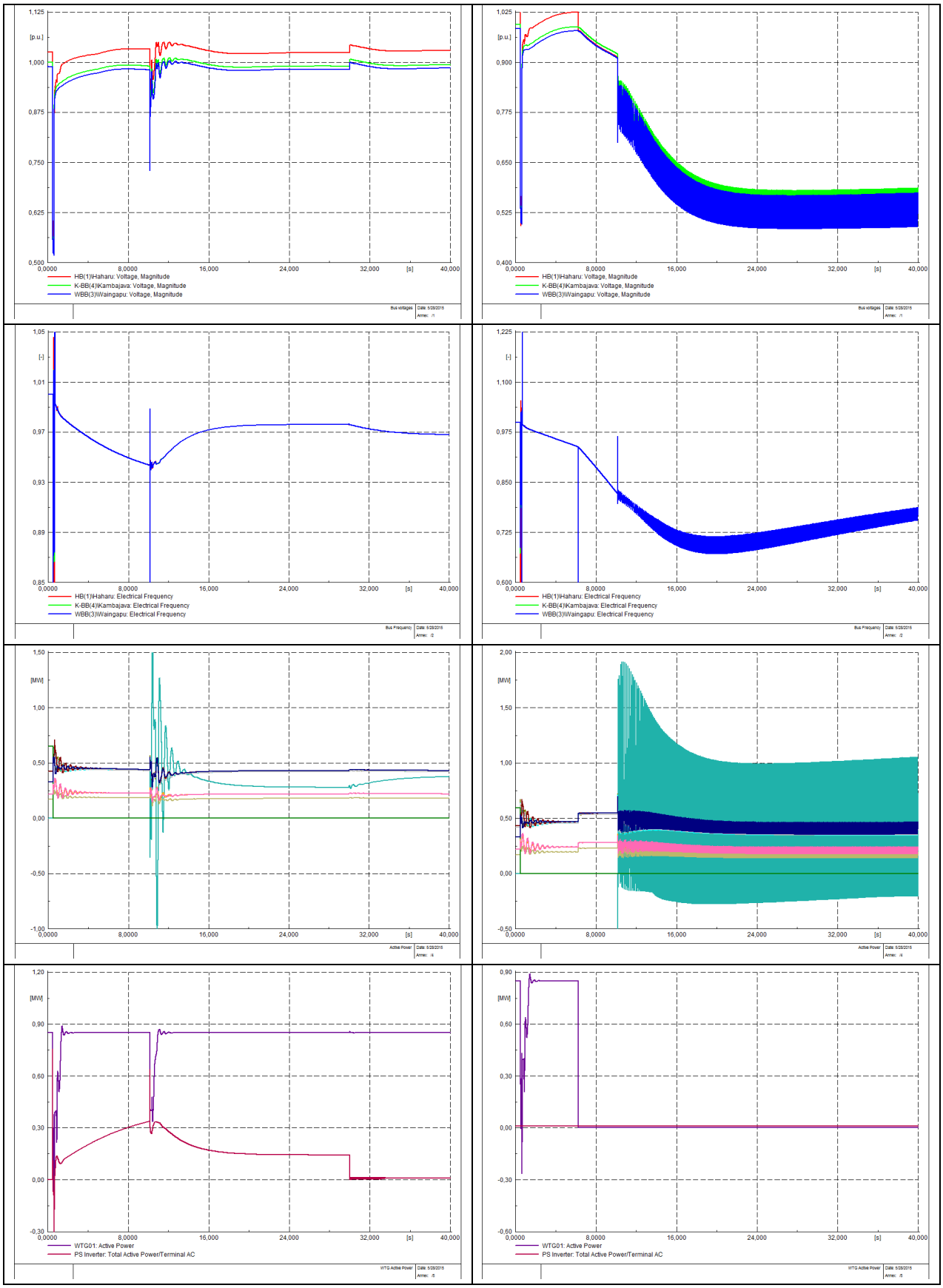

Figure 4. Loss of diesel generator with high load for scenario 1.

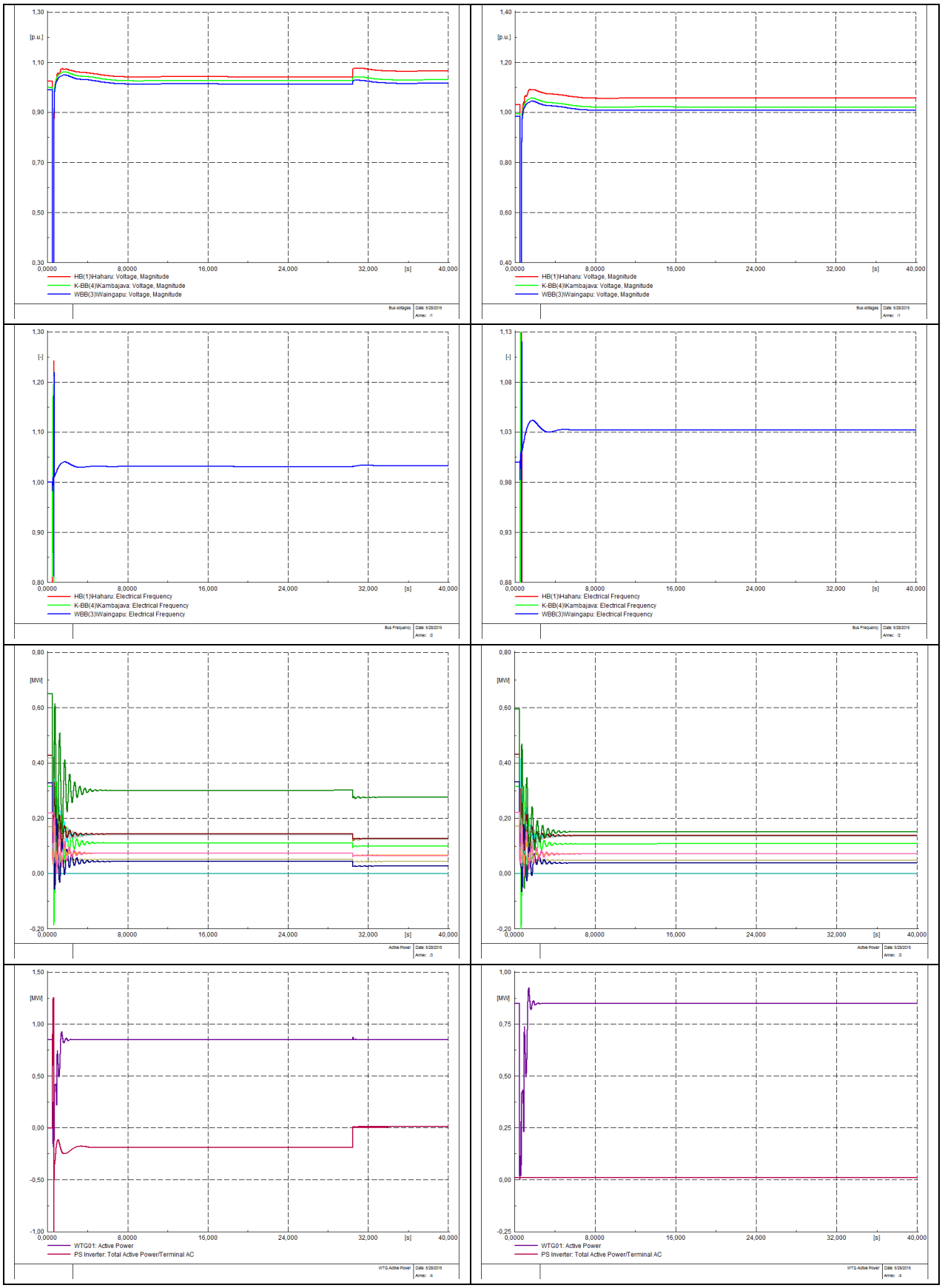

Figure 5. Loss of load with high load for scenario 1

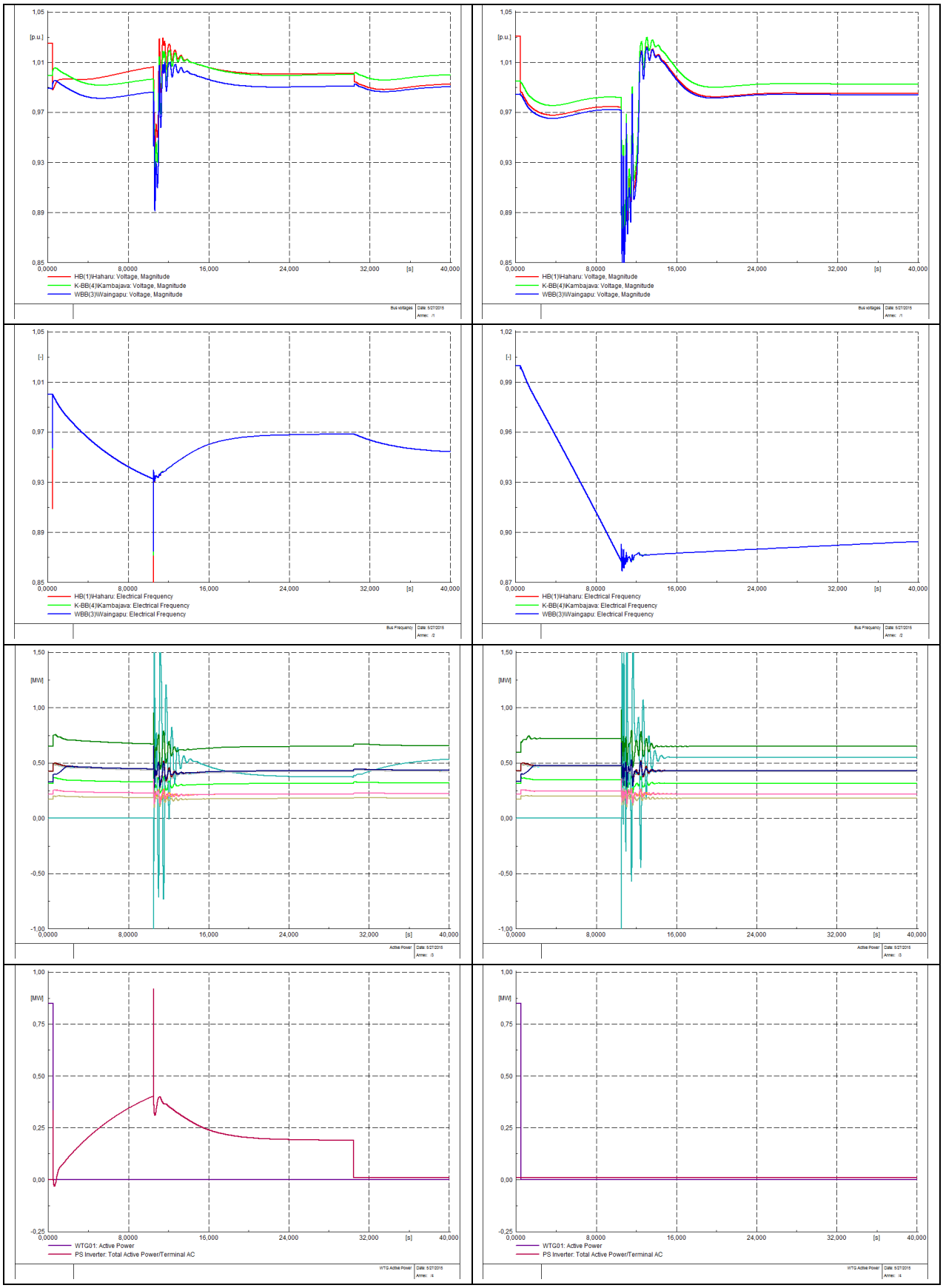

Figure 6. Loss of wind generation with high load for scenario 1

5.1.4. LOSS OF DIESEL GENERATOR WITH LOW LOAD

In this event the loss of the largest diesel generator (420 kW) is simulated, then the stability support equipment supplies power (200 kW) for a few seconds until it comes into operation another 550 kW diesel generator and stabilizes the system.

Figure 7 shows how the frequency decreases but is stopped by the actions of the stabilizer equipment until the backup generator comes in operation and then the load is shared between the both. When the stabilizer equipment provides no more power, the frequency goes down but is stabilized within acceptable values range (49.4 Hz). In this case the backup generator adjusted its operating point to a lower value because the lost generation is smaller than its nominal capacity. The voltages are also kept within the allowable range (between 1 to 1.04 p.u.). So the system is stable for this case.

Without the use of the stability support equipment, the system does not withstand the contingency like in point 5.1.1 because the frequency drops so sharply that the wind generator is also lost and there is not enough time to put in service the backup generator.

5.1.5. LOSS OF LOAD WITH LOW LOAD

In this event the loss of the largest load (1691 kW) is simulated, then the stability support equipment absorbs power (330 kW) for a few seconds and stabilizes the system.

Figure 8 show how the frequency increases but it remains within acceptable values. When the equipment absorbs no more power, the frequency goes up again but is stabilized within acceptable values (52.1 Hz). The voltages are also kept within the allowable range (between 1.01 to 1.06 p.u.). So the system is stable for this case.

Without the use of the stability support equipment, the system withstands the contingency because the generators change its operation point fast enough to compensate for the loss of load. So the use of the stability support equipment is not decisive for the system stability of this case.

5.1.6. LOSS OF WIND GENERATOR WITH LOW LOAD

In this event the loss of the wind turbine (850 kW) is simulated, then the stability support equipment supplies power (500 kW) for a few seconds until it comes into operation another 550 kW diesel generator and stabilizes the system.

Figure 9 show how the frequency decreases but is stopped by the actions of the stabilizer equipment until the backup generator comes and then the load is shared between the both. When the equipment provides no more power, the frequency goes down but is stabilized within acceptable values. The frequency is stabilized at a lower value (47.9 Hz) than that obtained in 5.1.4 because the generation loss is greater. The voltages are also kept within the allowable range (between 0.99 to 1 p.u.). The system is stable for this case but even so, this case is the most critical in this scenario because the loss of the wind generator represents a large percentage of the load supplied and the spinning reserve available is low.

Without the use of the stability support equipment, the system does not withstand the contingency because the frequency drops so sharply that the backup generator don't have enough power to compensate the loss generation and stabilize the system frequency.

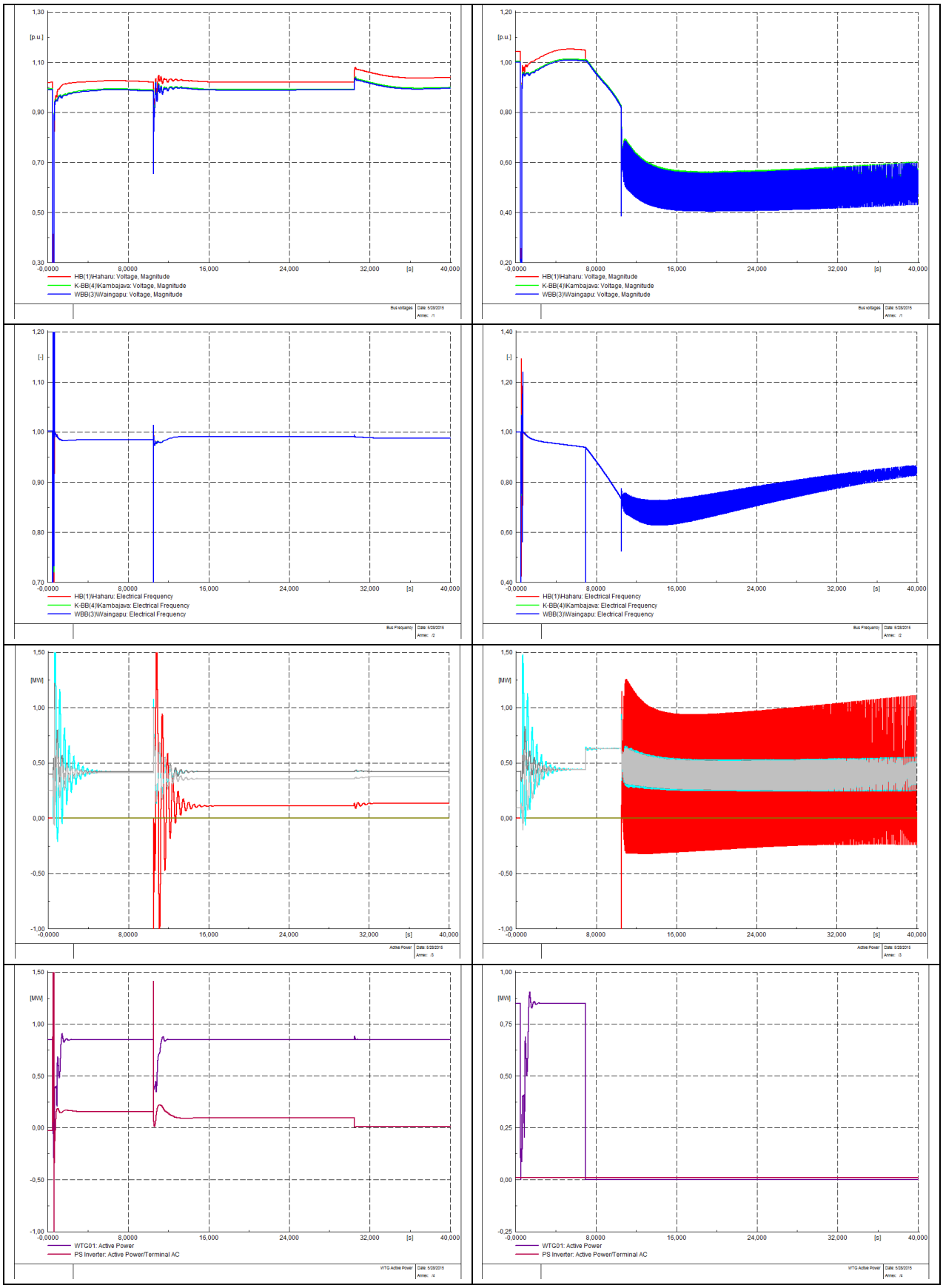

Figure 7. Loss of diesel generator with low load for scenario 1

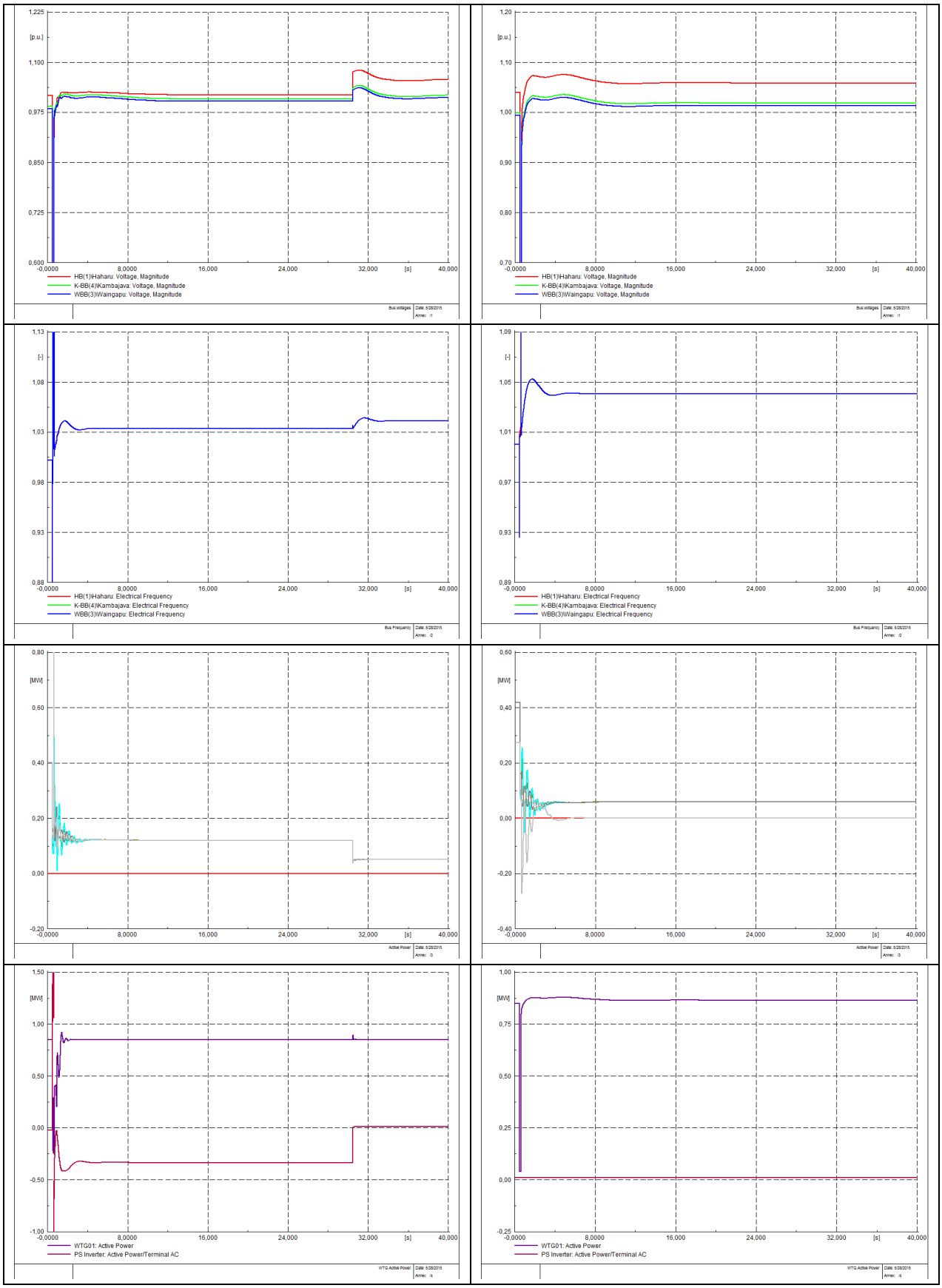

Figure 8. Loss of load with low load for scenario 1

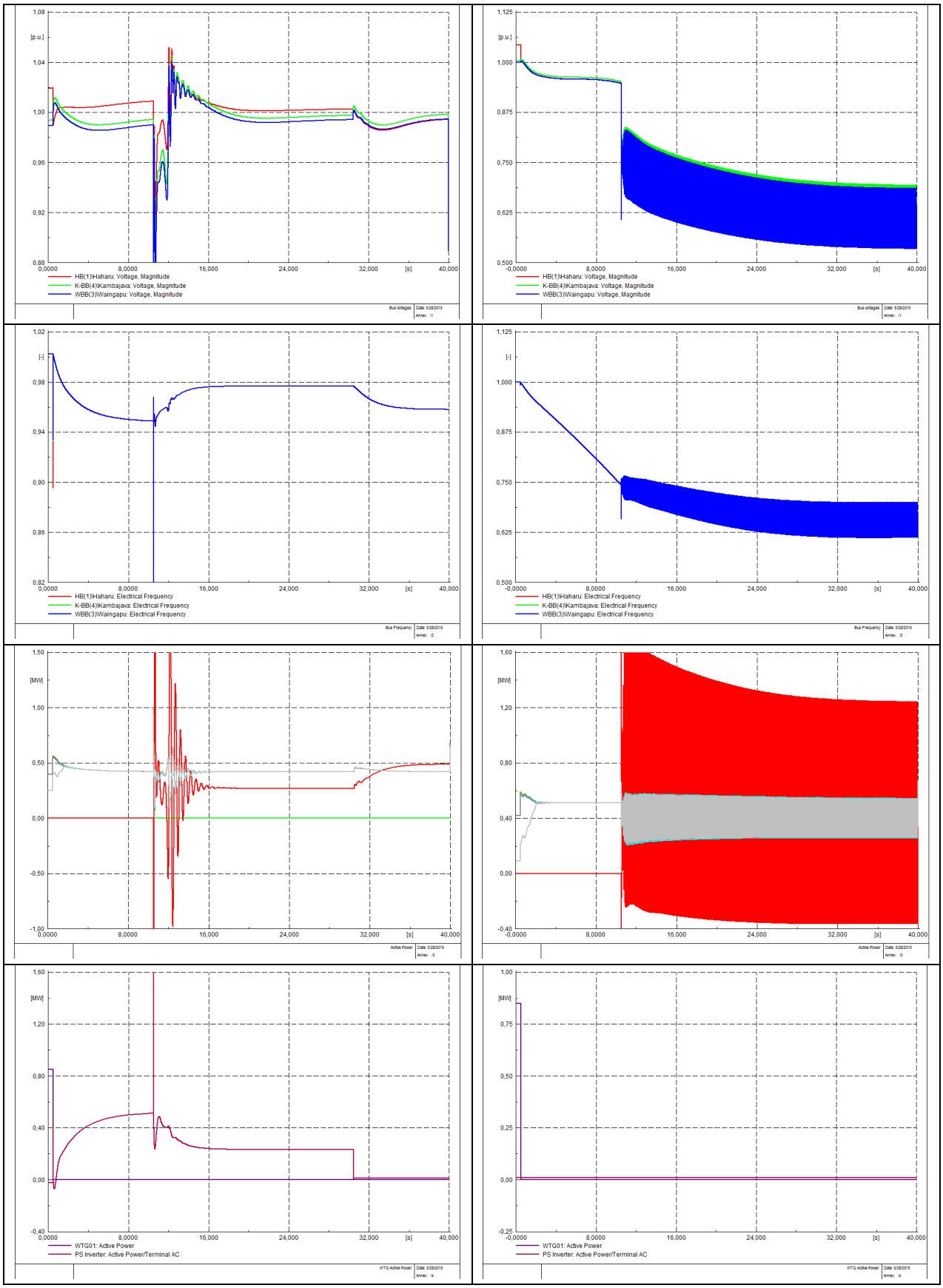

Figure 9. Loss of wind generation with low load for scenario 1

5.2. SCENARIO 2 ANALYSIS

For scenario 2, the east and west side of the grid are analyzed using the load and generation expected at 2018. All figures are shown after the whole analysis in order to facilitate reading comprehension.

The consolidated east-west grid have some problems from the voltage stability point of view. The system is more sensitive to disturbances and it takes a longer time to recover the balance. In all simulations can be seen reactive exchanges between the east and west sides after the disturbances.

5.2.1. LOSS OF DIESEL GENERATOR WITH HIGH LOAD

In this event the loss of the largest diesel generator (650 kW) is simulated at the east side, then the stability support equipment supplies power (990 kW) for a few seconds until it comes into operation another 425 kW diesel generator at the east side and stabilizes the system.

In this scenario each generator is represented as a consolidated generator, the loss of a consolidated generator exceed the design stage of n-1 contingency. So, the simulation of the loss of a generator was done by dropping the power supplied by one consolidated generator.

Figure 10 shows how the frequency decreases but is stopped by the actions of the stabilizer equipment until the backup generator comes and then the load is shared between the both. When the stabilizer equipment provides no more power, the frequency goes down but is stabilized within acceptable values range (49.77 Hz). The voltages are also kept within the allowable range (between 0.95 to 1.08 p.u.). So the system is stable for this case.

Without the use of the stability support equipment, the system does not support because the frequency drops so sharply that the wind generator is also lost and there is not enough time to put in service the backup generator.

5.2.2. LOSS OF LOAD WITH HIGH LOAD

In this event the loss of the largest load (4228 kW) of the system located at east side is simulated, then the stability support equipment absorbs power (100 kW) for a few seconds and stabilizes the system.

Figure 11 shows how the frequency increases but it remains within acceptable values. When the equipment absorbs no more power, the frequency goes up again but is stabilized within acceptable values (50.1 Hz). The voltages are also kept within the allowable range (between 0.90 to 1.09 p.u.). So the system is stable for this case.

Without the use of the stability support equipment, the system withstands the loss of load because the generators change their operation point fast enough to compensate for the loss of load. So the use of the stability support equipment is not decisive for the system stability of this case.

5.2.3. LOSS OF WIND GENERATOR WITH HIGH LOAD

In this event the loss of five wind turbine (4250 kW) is simulated, then the stability support equipment supplies power (4700 kW) for a few seconds until it comes into operation another 2900 kW diesel generator on the east side and 1300 kW on the west side and stabilizes the system.

Figure 12 shows how the frequency decreases after the contingency but is stopped by the actions stabilizer equipment until the backup generators come and then the load is shared between the both. When the stabilizer equipment provides no more power, the frequency goes up but is stabilized within acceptable values. The frequency is stabilized at a value of 50.1 Hz. The voltages are also kept within the allowable range (between 0.92 to 0.97 p.u.). So the system is stable for this case, although there are some issues from the standpoint of voltage stability which are commented in the recommendations and conclusions.

Without the use of the stability support equipment, the system does not withstand the loss of wind generation because the frequency drops so sharply that the backup generator don't have enough power to compensate the loss generation and stabilize the system frequency.

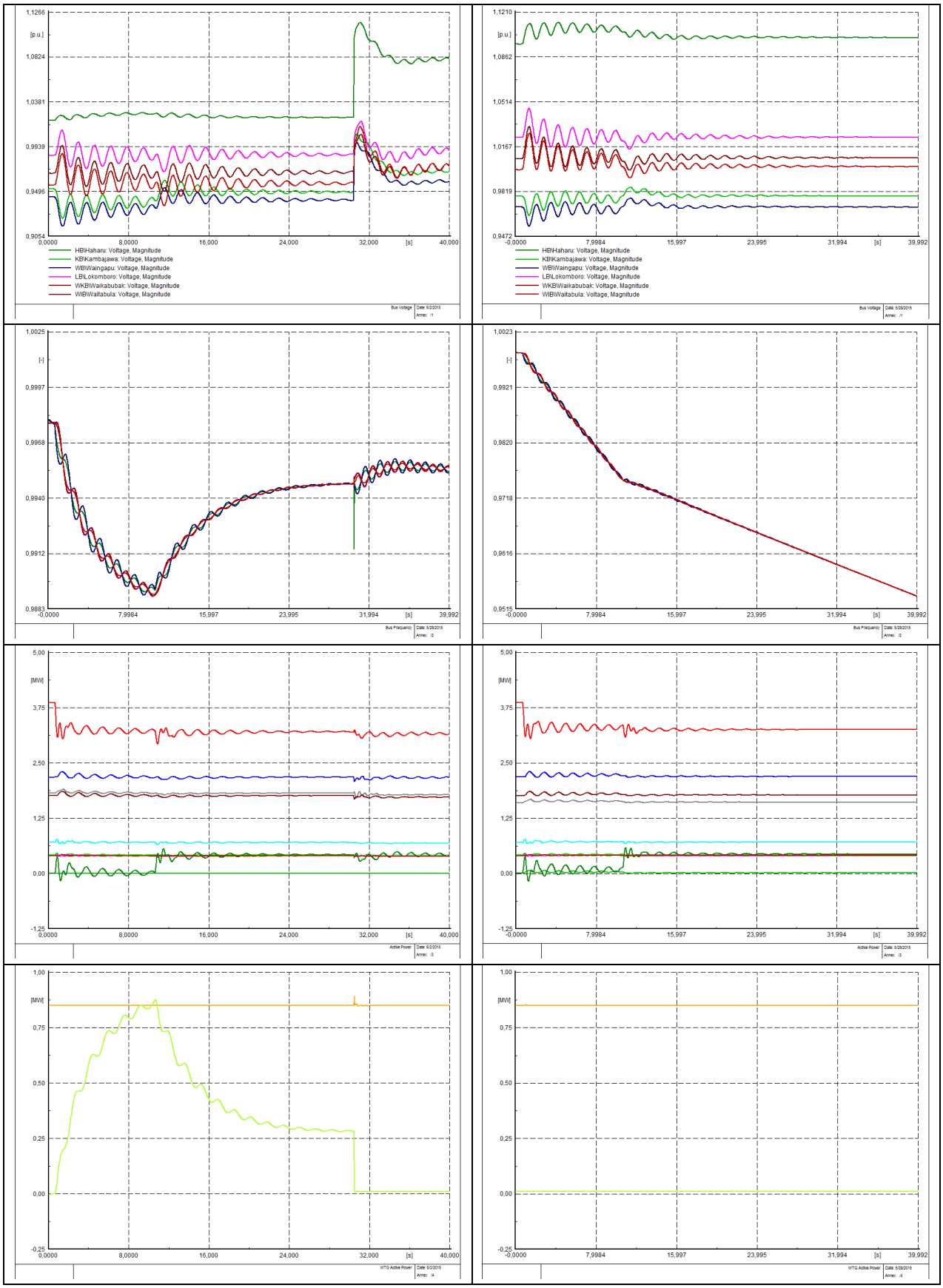

Figure 10. Loss of diesel generator with high load for scenario 2.

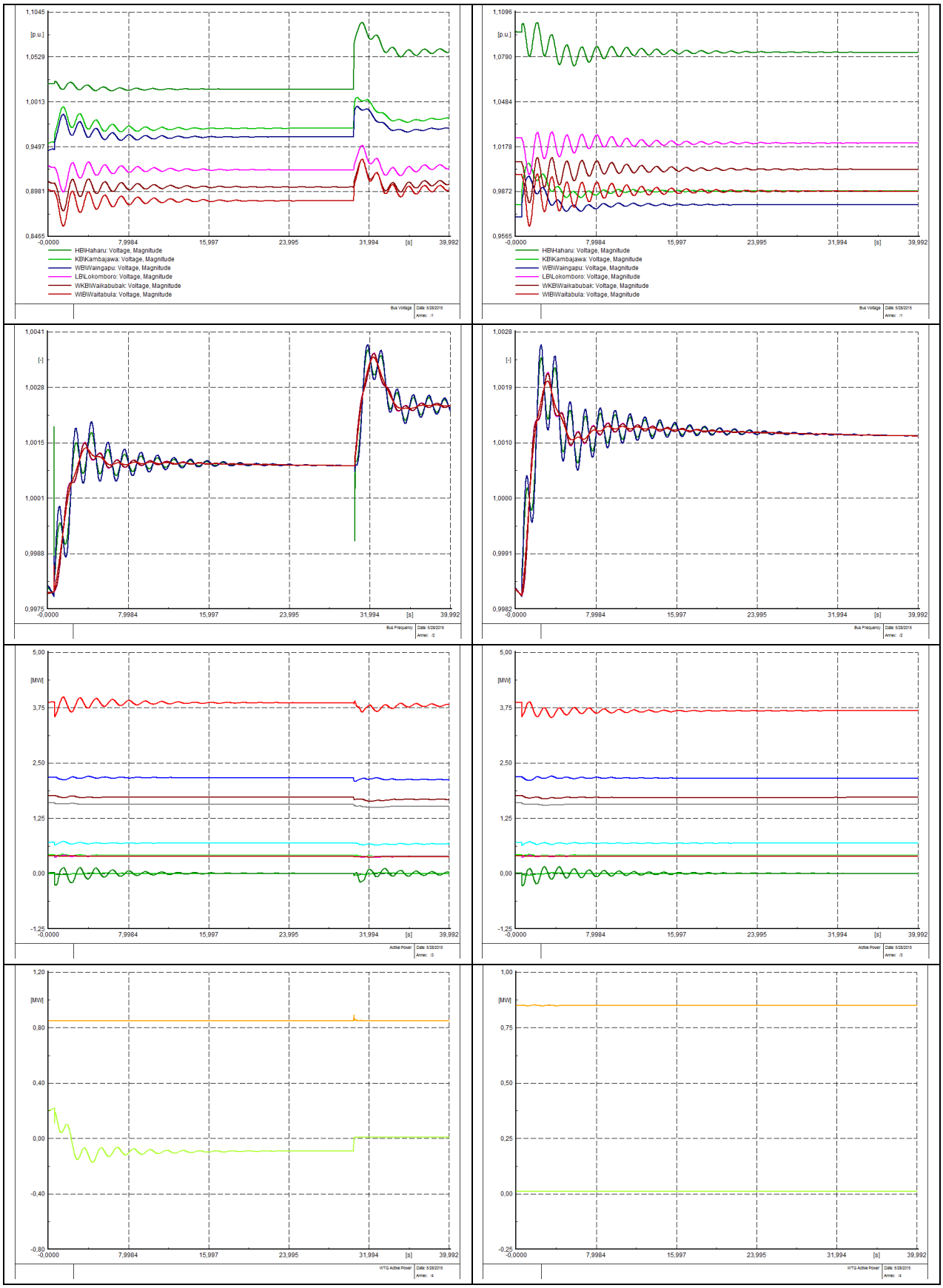

Figure 11. Loss of load with high load for scenario 2.

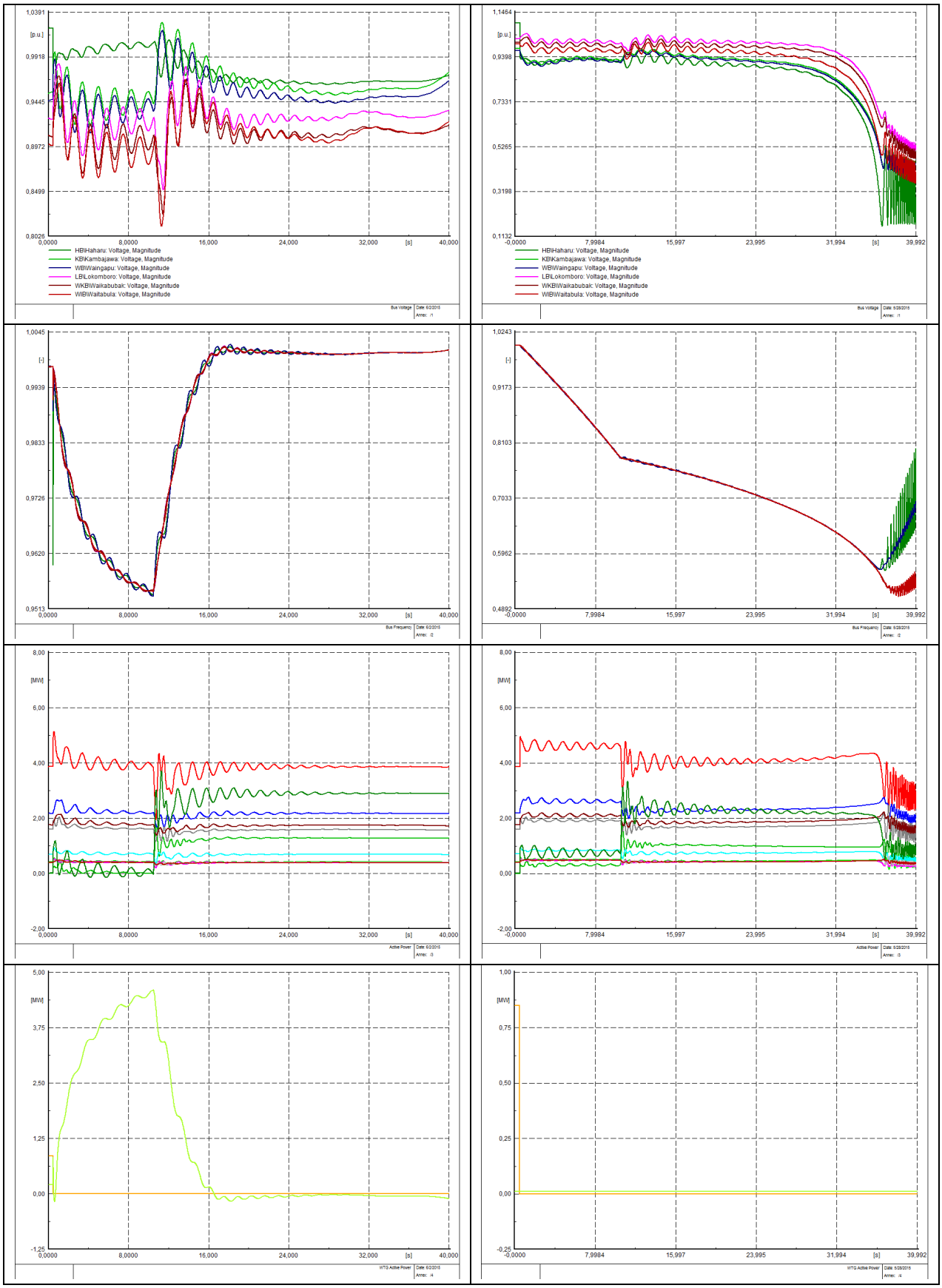

Figure 12. Loss of wind generation with high load for scenario 2

5.2.4. LOSS OF DIESEL GENERATOR WITH LOW LOAD

In this event the loss of the largest diesel generator (200 kW) is simulated, then the stability support equipment supplies power (140 kW) for a few seconds until it comes into operation another 150 kW diesel generator and stabilizes the system.

In this scenario each generator are represented as consolidated generator, the loss of a consolidated generator exceed the design stage of n-1 contingency. So, the simulation of the loss of a generator was done by dropping the power supplied by one consolidated generator.

Figure 13 shows how the frequency decreases but is stopped by the actions of the stabilizer equipment until the backup generator comes and then the load is shared between the both. When the equipment provide no more power, the frequency goes down but is stabilized within acceptable values range (49.9 Hz). In this case the backup generator adjusted its operating point to a lower value because the lost generation is smaller than its nominal capacity. The voltages are also kept within the allowable range (between 0.9 to 1.01 p.u.). So the system is stable for this case.

Without the use of the stability support equipment, the system does not support because the frequency drops so sharply that the wind generator is also lost and there is not enough time to put in service the backup generator.

5.2.5. LOSS OF LOAD WITH LOW LOAD

In this event the loss of the largest load (2046 kW) is simulated, then the stability support equipment absorbs power (36 kW) for a few seconds and stabilizes the system.

Figure 14 show how the frequency increases but it remains within acceptable values. When the equipment absorbs no more power, the frequency goes up again but is stabilized within acceptable values (50.01 Hz). The voltages are also kept within the allowable range (between 0.9 to 1.01 p.u.). So the system is stable for this case.

Without the use of the stability support equipment, the system withstands the contingency because the generators change their operation point fast enough to compensate for the loss of load. So the use of the stability support equipment is not decisive for the system stability of this case.

5.2.6. LOSS OF WIND GENERATOR WITH LOW LOAD

In this event the loss of five wind turbine (4250 kW) is simulated, then the stability support equipment supplies power (3600 kW) for a few seconds until it comes into operation another 2000 kW diesel generator on the east side and 1900 kW on the west side and stabilizes the system.

Figure 15 show how the frequency decreases but is stopped by the actions stabilizer equipment until the backup generators come and then the load is shared between all three. When the stabilizer equipment provides no more power, the frequency goes down but is stabilized within acceptable values. The frequency is stabilized at a higher value (50.1 Hz) than that obtained in 5.2.4 because the backup generation is greater. The voltages are also kept within the allowable range (between 0.96 to 0.99 p.u.). The system is stable for this case but even so, this case is the most critical in this scenario because the loss of wind generation represents a large percentage of the load supplied and the spinning reserve available is low.

Without the use of the stability support equipment, the system does not withstand the contingency because the frequency drops so sharply that the backup generator don't have enough power to compensate the loss generation and stabilize the system frequency.

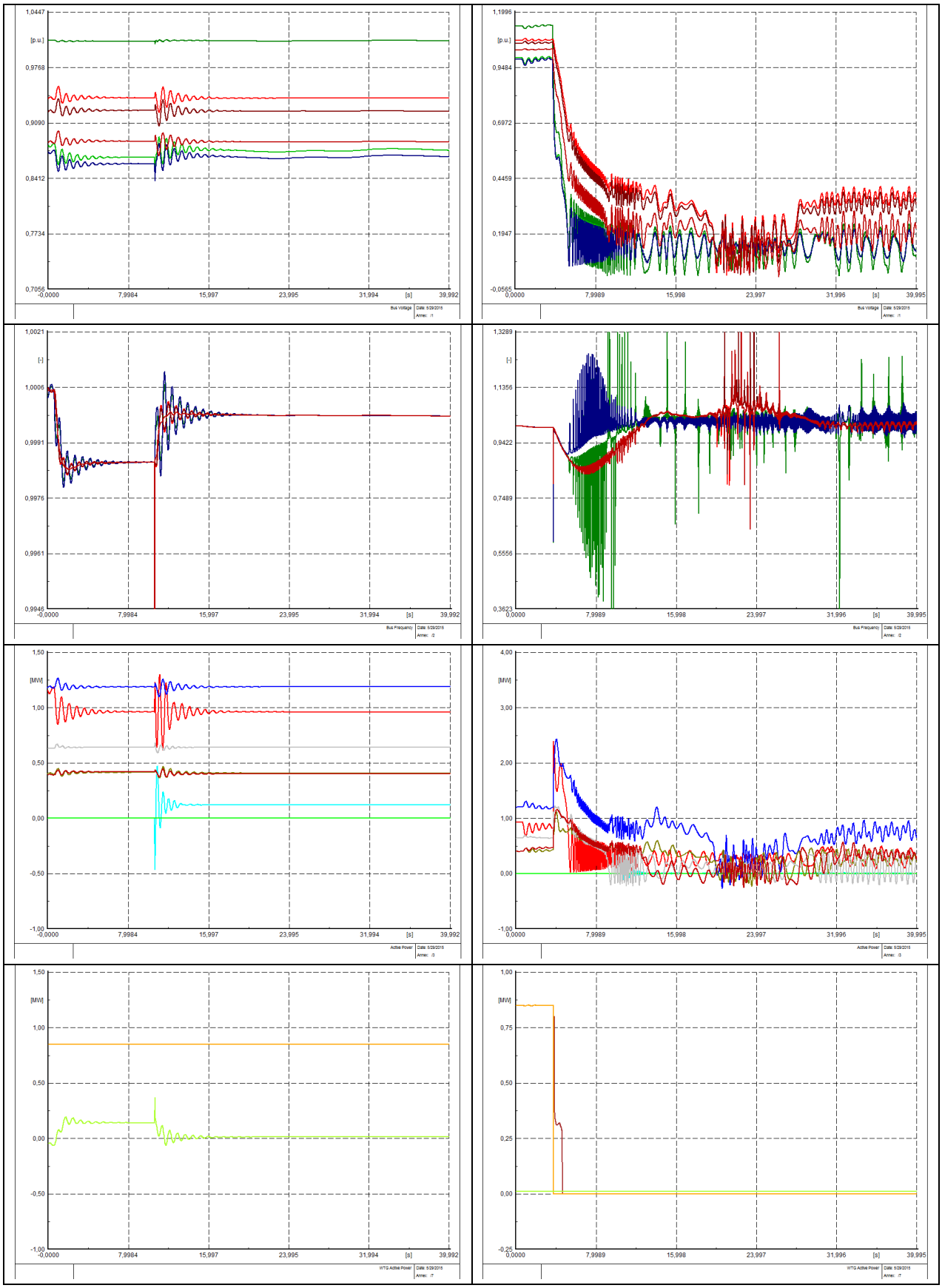

Figure 13. Loss of diesel generator with low load for scenario 2

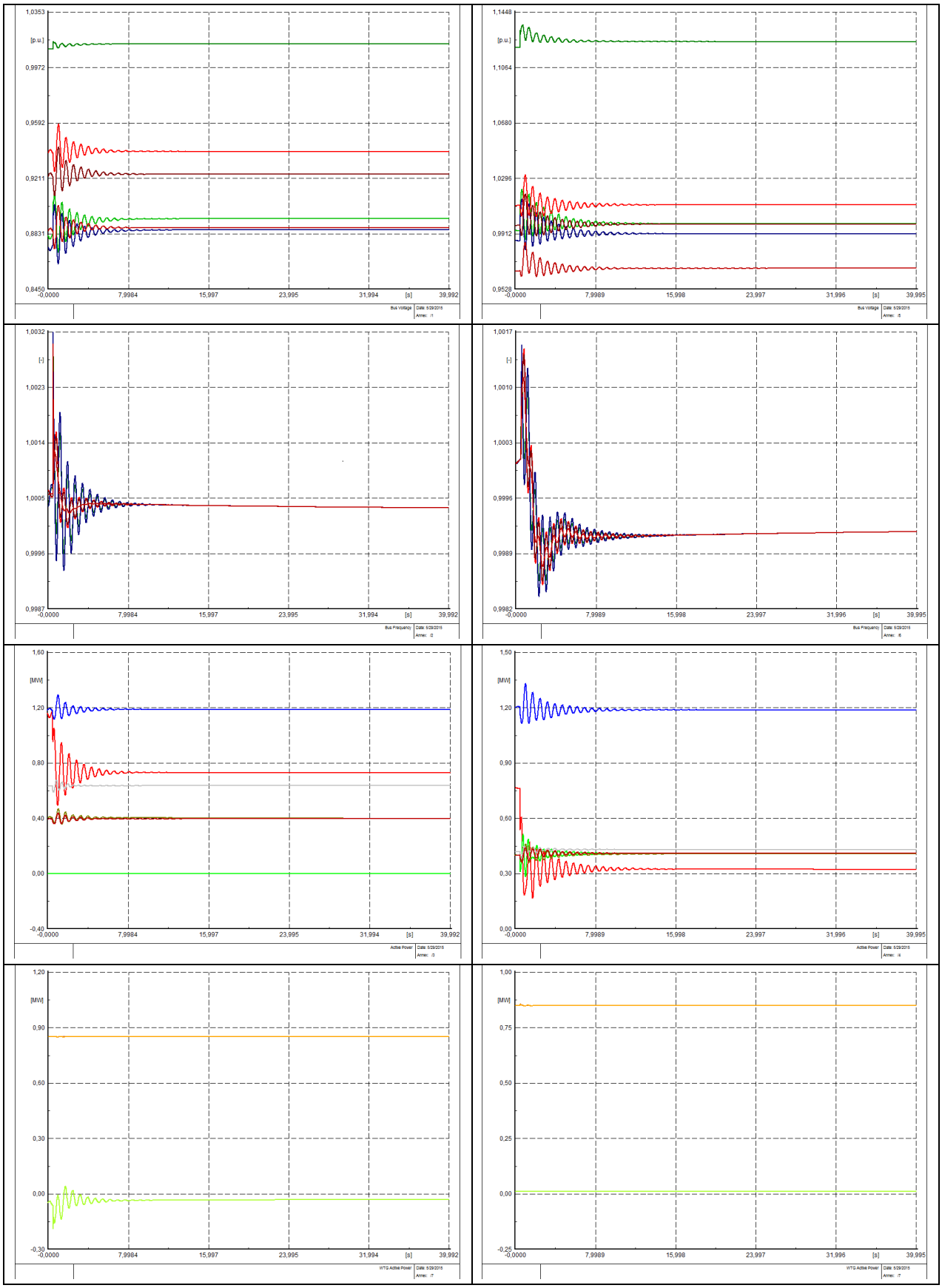

Figure 14. Loss of load with low load for scenario 2

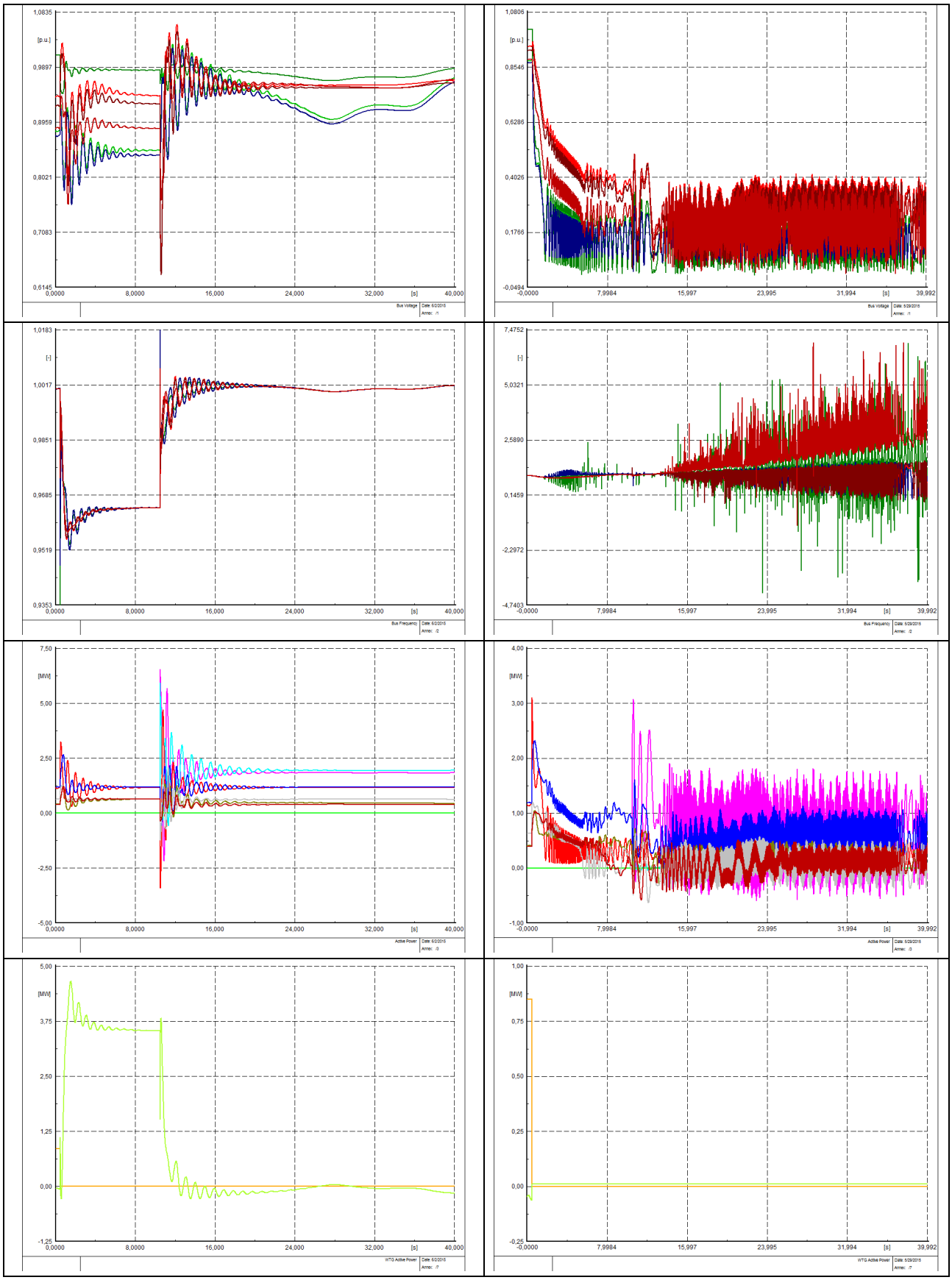

Figure 15. Loss of wind generation with low load for scenario 2

6. INTERCONNECTION LINE EVALUATION

In the projected 2018 system is expected to have the east and west sides connected by a 92 km line. In this point is evaluated how the stability of the system is affected by the introduction of this connection.

The interconnection line has the purpose of carry wind power to the load of the west side. But being a relatively long overhead line, it is one of the most vulnerable points in the system. So it is expected a faults occurrence rather high and the system needs to be prepared to deal with the problems this entails.

This system is a typical example of a system with two zones connected by a long line. One side of the system is strong, with more generation that load. While the other side is weak, with more load that generation. All this leads to problems of voltage stability.

For this analysis, a fault is simulated in the interconnection line with a clearance of the line in 0.15 s. The results are shown in Figure 16. With the system operating under the conditions given by the client, the west side collapses due to lack of generation (right side of figure) and the stabilizer equipment is not capable of contributing because it is in the east side.

For the left side of figure 16, the operation of the west side of the system was changed and more spinning reserve was added to that side. This makes that the generation is already available to the line loss and thus not have to depend to stabilizer equipment. For this simulation 1100 kW of spinning reserve was added and with the contingency, the west side frequency goes down but stabilizes at 50.1 Hz. The voltage were also stabilized between 1.07 and 1.09 p.u.

Figure 16 also shows that the east side frequency raises but stabilizes at 50.75 Hz. The voltage was stabilized between 0.94 and 1.1 p.u.

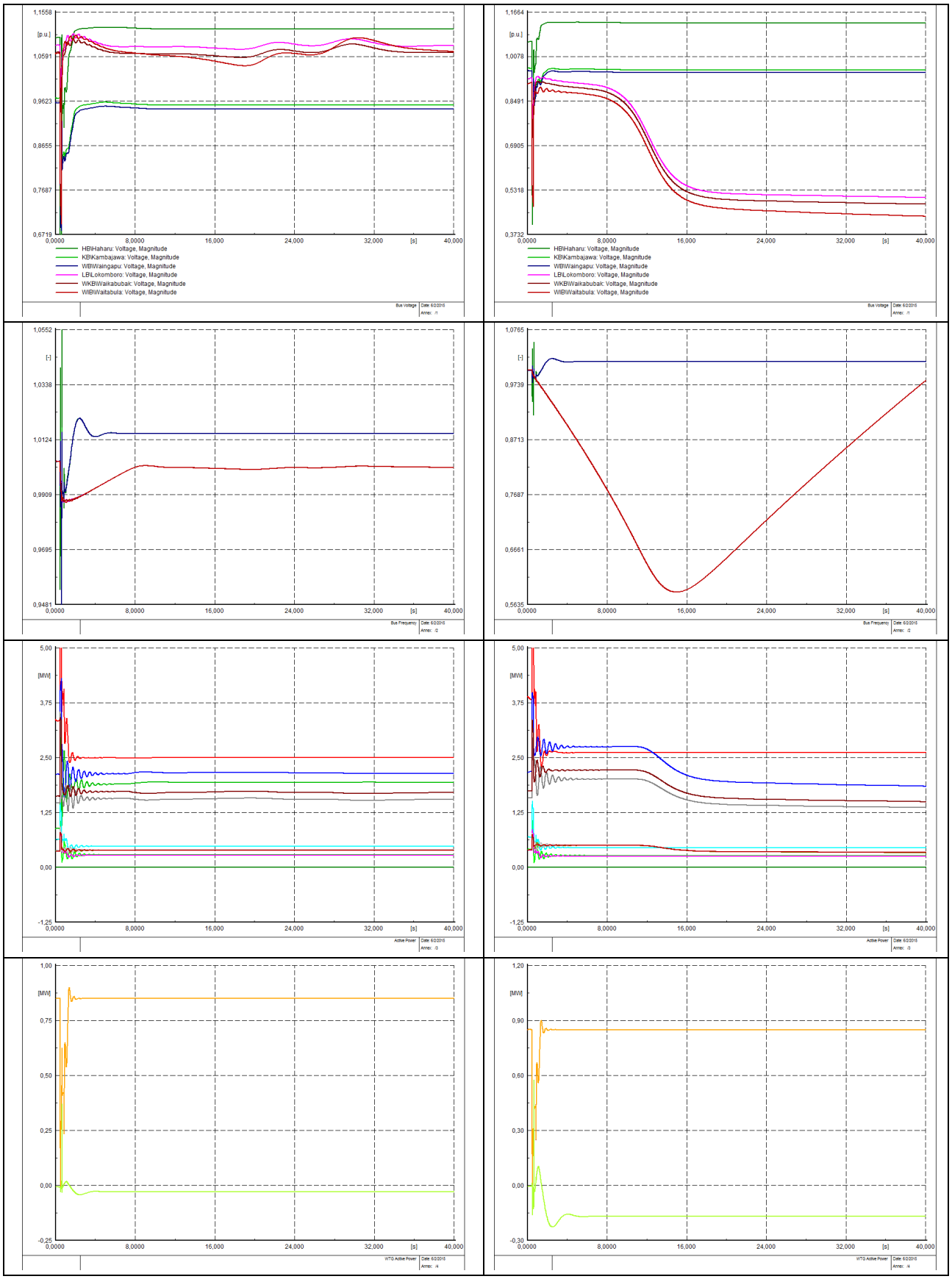

Figure 16. Fault in the interconnection line with high load for scenario 2.

7. CONCLUSIONS AND RECOMMENDATIONS

This report shows the stability study conducted to the Sumba Island system in Indonesia in order to analyze the impact of the introduction of wind power in the system.

This study has shown that, with the system operating criteria given by the client, it is not possible to introduce just wind turbines. Therefore, is recommended the use of an equipment to provide support to the system stability during transient events. Two technologies were proposed for the selection of this equipment, battery banks and Flywheel.

For scenario 1, 2016, it will be needed an equipment with at least of 500 kW of capacity and for scenario 2, 2018, it will be needed an equipment with at least of 4500 kW in order to supply transitory support to the stability of the system. The contribution time of the additional equipment is determined by the starting time of the back-up diesel generators that were defined as inputs by the client.

Regardless of the time of action, the capacity required for scenario 2 is not met for a single flywheel and the use of several in parallel will significantly increase the cost of the solution and the complexity of the operation. For all this, the use of battery banks are recommended, with capacities of at least 500 kW for 2016 scenario and 4500 kW for 2018 scenario and with a time of action defined by the final starting up process of the back-up diesel generators.

Is has also shown that for scenario 2, the west side of the system is highly vulnerable from the point of view of voltage stability. Without increase the reactive capacity in this area, it would not be able to recover from some contingencies. Then a study is recommended to reassess the dispatch of the system in order to optimize the spinning reserve. Increasing the spinning reserve also reduces the need to use battery banks so the reassessment of the dispatch of the entire system is recommended including a technical-economical assessment of the solutions is also recommended in order to define the optimal solution to ensure system stability.

Appendix G: Steady-State and Dynamic System Modeling for the Integration of Two 850-kW Wind Turbine Generators

This report is available at no cost from the National Renewable Energy Laboratory (NREL) at www.nrel.gov/publications.

Table of Contents

Legends **325**
Three-Phase-to-Ground Fault at Kambajawa Bus—Self-Clearing of Fault **326**
High Wind High Load 326
High Wind Low Load 329
High Wind High Load with PowerStore 331
High Wind Low Load with PowerStore 333
Three-Phase-to-Ground Fault at Waingapu Bus—Self-Clearing of Fault **335**
High Wind High Load 335
High Wind Low Load 338
High Wind High Load with PowerStore 340
High Wind Low Load with PowerStore 342
Wind Power Plant Outage at Haharu Bus—No Self-Clearing of Fault **344**
High Wind High Load 344
High Wind Low Load 347
High Wind High Load with PowerStore 349
High Wind Low Load with PowerStore 351
Partial Generator Outage at Kambajawa Bus—No Self-Clearing of Fault **353**
High Wind High Load 353
High Wind Low Load 356
High Wind High Load with PowerStore 358
High Wind Low Load with PowerStore 360
Total Load Loss at Kambajawa Bus **362**
High Wind High Load 362
High Wind Low Load 365
High Wind High Load with PowerStore 367
High Wind Low Load with PowerStore 369
Kambajawa-Haharu Transmission Line Fault—Self-Clearing of Fault **371**
High Wind High Load 371
High Wind Low Load 374
High Wind High Load with PowerStore 376
High Wind Low Load with PowerStore 378

This report is available at no cost from the National Renewable Energy Laboratory (NREL) at www.nrel.gov/publications.

List of Figures

Figure G-1. Schematic layout for the High Wind High Load scenario for the Three-Phase-to-Ground Fault at Kambajawa Bus—Self-Clearing of Fault study case 326
Figure G-2. High Wind High Load scenario for the Three-Phase-to-Ground Fault at Kambajawa Bus—Self-Clearing of Fault study case. (1) Rotor angle of generators, (2) bus frequency, (3) generator frequency, (4) bus voltage, (5) terminal voltage, and (6) real power of generators327
Figure G-3. Power output of two WTGs for the High Wind High Load scenario for the Three-Phase-to-Ground Fault at Kambajawa Bus—Self-Clearing of Fault study case..... 328
Figure G-4. High Wind Low Load scenario for the Three-Phase-to-Ground Fault at Kambajawa Bus—Self-Clearing of Fault study case. (1) Rotor angle of generators, (2) bus frequency, (3) generator frequency, (4) bus voltage, (5) terminal voltage, and (6) real power of generators329
Figure G-5. Power output of two WTGs for the High Wind Low Load scenario for the Three-Phase-to-Ground Fault at Kambajawa Bus—Self-Clearing of Fault study case..... 330
Figure G-6. High Wind High Load with PowerStore scenario for the Three-Phase-to-Ground Fault at Kambajawa Bus—Self-Clearing of Fault study case. (1). Rotor angle of generators, (2) bus frequency, (3) generator frequency, (4) bus voltage, (5) terminal voltage, and (6) real power of generators..... 331
Figure G-7. Active power output of the two WTGs for the High Wind High Load with PowerStore scenario for the Three-Phase-to-Ground Fault at Kambajawa Bus—Self-Clearing of Fault study case 332
Figure G-8. High Wind Low Load with PowerStore scenario for the Three-Phase-to-Ground Fault at Kambajawa Bus—Self-Clearing of Fault study case. (1) Rotor angle of generators, (2) bus frequency, (3) generator frequency, (4) bus voltage, (5) terminal voltage, and (6) real power of generators..... 333
Figure G-9. Power output of two WTGs for the High Wind Low Load with PowerStore scenario for the Three-Phase-to-Ground Fault at Kambajawa Bus—Self-Clearing of Fault study case..... 334
Figure G-10. Schematic layout for the High Wind High Load scenario for the Three-Phase-to-Ground Fault at Waingapu Bus—Self-Clearing of Fault study case 335
Figure G-11. High Wind High Load scenario for the Three-Phase-to-Ground Fault at Waingapu Bus—Self-Clearing of Fault study case. (1) Rotor angle of generators, (2) bus frequency, (3) generator frequency, (4) bus voltage, (5) terminal voltage, and (6) real power of generators336
Figure G-12. Power output of two WTGs for the High Wind High Load scenario for the Three-Phase-to-Ground Fault at Waingapu Bus—Self-Clearing of Fault study case 337
Figure G-13. High Wind Low Load scenario and Three-Phase-to-Ground Fault at Waingapu Bus—Self-Clearing of Fault study case. (1) Rotor angle of generators, (2) bus frequency, (3) generator frequency, (4) bus voltage, (5) terminal voltage, and (6) real power of generators..... 338
Figure G-14. Power output of two WTGs for the High Wind Low Load scenario for the Three-Phase-to-Ground Fault at Waingapu Bus—Self-Clearing of Fault study case 339
Figure G-15. High Wind High Load with PowerStore scenario for the Three-Phase-to-Ground Fault at Waingapu Bus—Self-Clearing of Fault study case. (1) Rotor angle of generators, (2) bus frequency, (3) generator frequency, (4) bus voltage, (5) terminal voltage, and (6) real power of generators..... 340
Figure G-16. Power output of two WTGs for the High Wind High Load with PowerStore scenario for the Three-Phase-to-Ground Fault at Waingapu Bus—Self-Clearing of Fault study case..... 341
Figure G-17. High Wind Low Load with PowerStore scenario for the Three-Phase-to-Ground Fault at Waingapu Bus—Self-Clearing of Fault study case. (1) Rotor angle of generators, (2) bus frequency, (3) generator frequency, (4) bus voltage, (5) terminal voltage, and (6) real power of generators..... 342
Figure G-18. Power output of two WTGs for the High Wind Low Load with PowerStore scenario for the Three-Phase-to-Ground Fault at Waingapu Bus—Self-Clearing of Fault study case..... 343

This report is available at no cost from the National Renewable Energy Laboratory (NREL) at www.nrel.gov/publications.

Figure G-19. Schematic layout for the High Wind High Load scenario and Wind Power Plant Outage at Haharu Bus—No Self-Clearing of Fault study case 344
Figure G-20. High Wind High Load scenario for the Wind Power Plant Outage at Haharu Bus—No Self-Clearing of Fault study case. (1) Rotor angle of generators, (2) bus frequency, (3) generator frequency, (4) bus voltage, (5) terminal voltage, and (6) real power of generators 345
Figure G-21. Power output of two WTGs for the High Wind High Load scenario for the Wind Power Plant Outage at Haharu Bus—No Self-Clearing of Fault study case 346
Figure G-22. High Wind Low Load scenario for the Wind Power Plant Outage at Haharu Bus—No Self-Clearing of Fault study case. (1) Rotor angle of generators, (2) bus frequency, (3) generator frequency, (4) bus voltage, (5) terminal voltage, and (6) real power of generators 347
Figure G-23. Power output of two WTGs for the High Wind Low Load with PowerStore scenario for the Wind Power Plant Outage at Haharu Bus—No Self-Clearing of Fault study case 348
Figure G-24. High Wind High Load scenario with PowerStore for the Wind Power Plant Outage at Haharu Bus—No Self-Clearing of Fault study case. (1) Rotor angle of generators, (2) bus frequency, (3) generator frequency, (4) bus voltage, (5) terminal voltage, and (6) real power of generators 349
Figure G-25. Power output of two WTGs for the High Wind High Load scenario with PowerStore for the Wind Power Plant Outage at Haharu Bus—No Self-Clearing of Fault study case 350
Figure G-26. High Wind Low Load with PowerStore scenario for the Wind Power Plant Outage at Haharu Bus—No Self-Clearing of Fault study case. (1) Rotor angle of generators, (2) bus frequency, (3) generator frequency, (4) bus voltage, (5) terminal voltage, and (6) real power of generators 351
Figure G-27. Power output of two WTGs for the High Wind Low Load with PowerStore scenario for the Wind Power Plant Outage at Haharu Bus—No Self-Clearing of Fault study case 352
Figure G-28. Schematic layout for the High Wind High Load scenario for the Partial Generator (650 kW) Outage at Kambajawa Bus—No Self-Clearing of Fault study case 353
Figure G-29. High Wind High Load scenario for the Partial Generator (650 kW) Outage at Kambajawa Bus—No Self-Clearing of Fault study case. (1) Rotor angle of generators, (2) bus frequency, (3) generator frequency, (4) bus voltage, (5) terminal voltage, and (6) real power of generators 354
Figure G-30. Power output of two WTGs for the High Wind High Load scenario for the Partial Generator (650 kW) Outage at Kambajawa Bus—No Self-Clearing of Fault study case 355
Figure G-31. High Wind Low Load scenario for the Partial Generator (420 kW) Outage at Kambajawa Bus—No Self-Clearing of Fault study case. (1) Rotor angle of generators, (2) bus frequency, (3) generator frequency, (4) bus voltage, (5) terminal voltage, and (6) real power of generators 356
Figure G-32. Power output of two WTGs for the High Wind High Load scenario for the Partial Generator (420 kW) Outage at Kambajawa Bus—No Self-Clearing of Fault study case 357
Figure G-33. High Wind High Load with PowerStore scenario for the Partial Generator (650 kW) Outage at Kambajawa Bus—No Self-Clearing of Fault study case. (1) Rotor angle of generators, (2) bus frequency, (3) generator frequency, (4) bus voltage, (5) terminal voltage, and (6) real power of generators 358
Figure G-34. Active power output of the two WTGs for the High Wind High Load with PowerStore scenario for the Partial Generator (650 kW) Outage at Kambajawa Bus—No Self-Clearing of Fault study case 359
Figure G-35. High Wind Low Load with PowerStore scenario for the Partial Generator (420 kW) Outage at Kambajawa Bus—No Self-Clearing of Fault study case. (1) Rotor angle of generators, (2) bus frequency, (3) generator frequency, (4) bus voltage, (5) terminal voltage, and (6) real power of generators 360

This report is available at no cost from the National Renewable Energy Laboratory (NREL) at www.nrel.gov/publications.

Figure G-36. Active power output of the two WTGs for the High Wind Low Load with PowerStore scenario for the Partial Generator (420 kW) Outage at Kambajawa Bus—No Self-Clearing of Fault study case 361
Figure G-37. Schematic layout for the High Wind High Load scenario for the Total Load Loss at Kambajawa Bus—No Self-Clearing of Fault study case 362
Figure G-38. High Wind High Load scenario for the Total Load Loss at Kambajawa Bus—No Self-Clearing of Fault study case. (1) Rotor angle of generators, (2) bus frequency, (3) generator frequency, (4) bus voltage, (5) terminal voltage, and (6) real power of generators 363
Figure G-39. Active power output of the two WTGs for the High Wind High Load scenario for the Total Load Loss at Kambajawa Bus—No Self-Clearing of Fault study case 364
Figure G-40. High Wind Low Load scenario for the Total Load Loss at Kambajawa Bus—No Self-Clearing of Fault study case. (1) Rotor angle of generators, (2) bus frequency, (3) generator frequency, (4) bus voltage, (5) terminal voltage, and (6) real power of generators 365
Figure G-41. Active power output of the two WTGs for the High Wind High Load scenario for the Total Load Loss at Kambajawa Bus—No Self-Clearing of Fault study case 366
Figure G-42. High Wind High Load with PowerStore scenario for the Total Load Loss at Kambajawa Bus—No Self-Clearing of Fault study case. (1) Rotor angle of generators, (2) bus frequency, (3) generator frequency, (4) bus voltage, (5) terminal voltage, and (6) real power of generators 367
Figure G-43. Active power output of the two WTGs for the High Wind High Load with PowerStore scenario for the Total Load Loss at Kambajawa Bus—No Self-Clearing of Fault study case368
Figure G-44. High Wind Low Load with PowerStore scenario for the Total Load Loss at Kambajawa Bus—No Self-Clearing of Fault study case. (1) Rotor angle of generators, (2) bus frequency, (3) generator frequency, (4) bus voltage, (5) terminal voltage, and (6) real power of generators 369
Figure G-45. Active power output of the two WTGs for the High Wind Low Load with PowerStore scenario for the Total Load Loss at Kambajawa Bus—No Self-Clearing of Fault study case370
Figure G-46. Schematic layout for High Wind High Load scenario for the Kambajawa-Haharu Transmission Line Fault—Self-Clearing of Fault study case 371
Figure G-47. High Wind High Load scenario for the Kambajawa-Haharu Transmission Line Fault—Self-Clearing of Fault study case. (1) Rotor angle of generators, (2) bus frequency, (3) generator frequency, (4) bus voltage, (5) terminal voltage, and (6) real power of generators 372
Figure G-48. Active power output of the two WTGs for the High Wind High Load scenario for the Kambajawa-Haharu Transmission Line Fault—Self-Clearing of Fault study case 373
Figure G-49. High Wind Low Load scenario for the Kambajawa-Haharu Transmission Line Fault—Self-Clearing of Fault study case. (1) Rotor angle of generators, (2) bus frequency, (3) generator frequency, (4) bus voltage, (5) terminal voltage, and (6) real power of generators 374
Figure G-50. Active power output of the two WTGs for the High Wind High Load scenario for the Kambajawa-Haharu Transmission Line Fault—Self-Clearing of Fault study case 375
Figure G-51. High Wind High Load with PowerStore scenario for the Kambajawa-Haharu Transmission Line Fault—Self-Clearing of Fault study case. (1) Rotor angle of generators, (2) bus frequency, (3) generator frequency, (4) bus voltage, (5) terminal voltage, and (6) real power of generators 376
Figure G-52. Active power output of the two WTGs for the High Wind High Load with PowerStore scenario for the Kambajawa-Haharu Transmission Line Fault—Self-Clearing of Fault study case 377
Figure G-53. High Wind Low Load with PowerStore scenario for the Kambajawa-Haharu Transmission Line Fault—Self-Clearing of Fault study case. (1) Rotor angle of generators, (2) bus frequency, (3) generator frequency, (4) bus voltage, (5) terminal voltage, and (6) real power of generators 378

This report is available at no cost from the National Renewable Energy Laboratory (NREL) at www.nrel.gov/publications.

Figure G-54. Active power output of the two WTGs for the High Wind Low Load with PowerStore scenario for the Kambajawa-Haharu Transmission Line Fault—Self-Clearing of Fault study case 379

List of Tables

Table G-1. Legend for All Plots 325

This report is available at no cost from the National Renewable Energy Laboratory (NREL) at www.nrel.gov/publications.

Legends

Table G-1. Legend for All Plots

Line Color	Generator	Line Color	Bus
	CAT C32		Haharu
	DEUT Z-2		Kambajawa
	DOOSAN1		Waingapu
	DOOSAN2		
	DOOSAN3		
	DOOSAN4		
	DOOSAN5		
	MAN1		
	MTU1		
	MTU4		
	VOLVO		
	YANMAR		

This report is available at no cost from the National Renewable Energy Laboratory (NREL) at www.nrel.gov/publications.

Three-Phase-to-Ground Fault at Kambajawa Bus—Self-Clearing of Fault

In this study case, a three-phase-to-ground fault at the Kambajawa Bus is analyzed with two 850-kW WTGs at Haharu. The fault occurs at 1 s, and it self-clears in 180 ms. The four scenarios for this case are presented below.

High Wind High Load

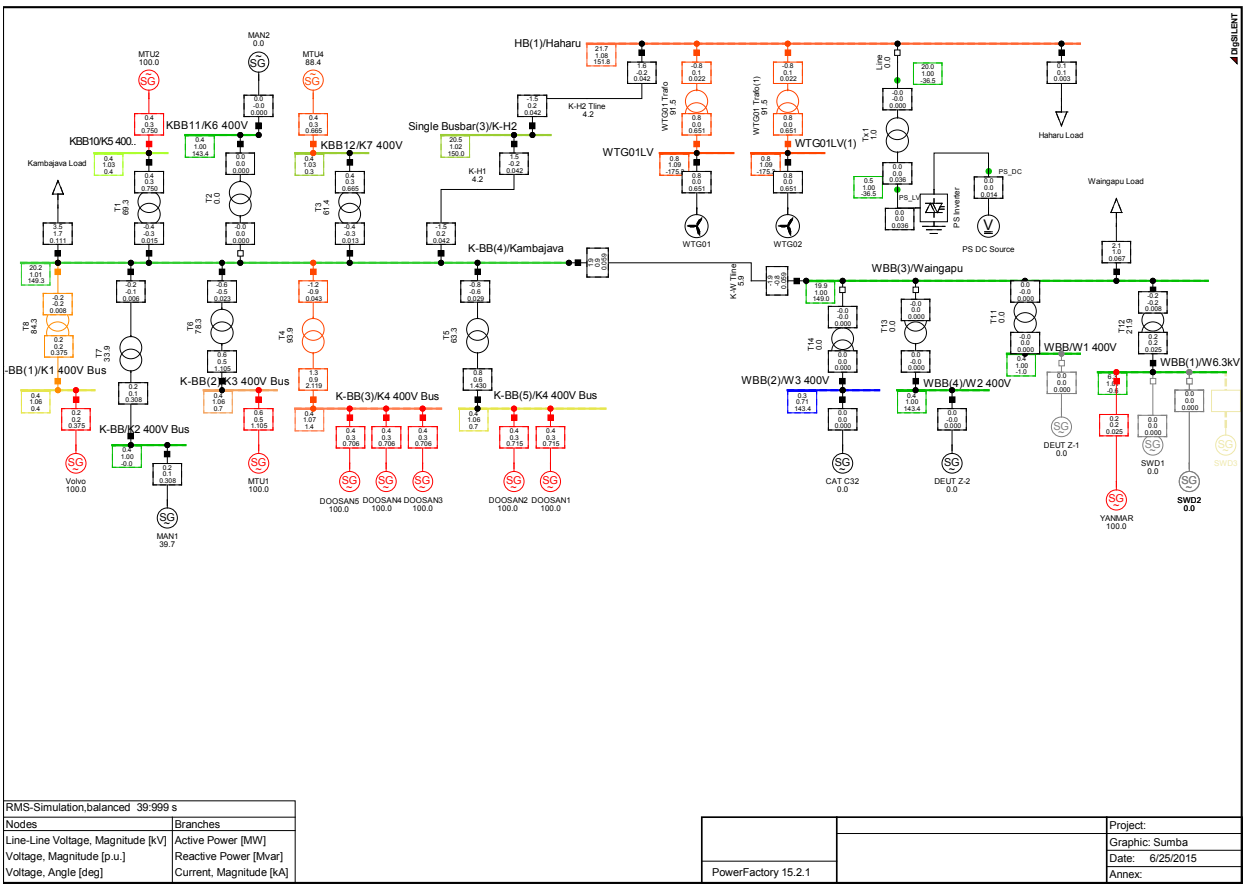

Figure G-1. Schematic layout for the High Wind High Load scenario for the Three-Phase-to-Ground Fault at Kambajawa Bus—Self-Clearing of Fault study case

This report is available at no cost from the National Renewable Energy Laboratory (NREL) at www.nrel.gov/publications.

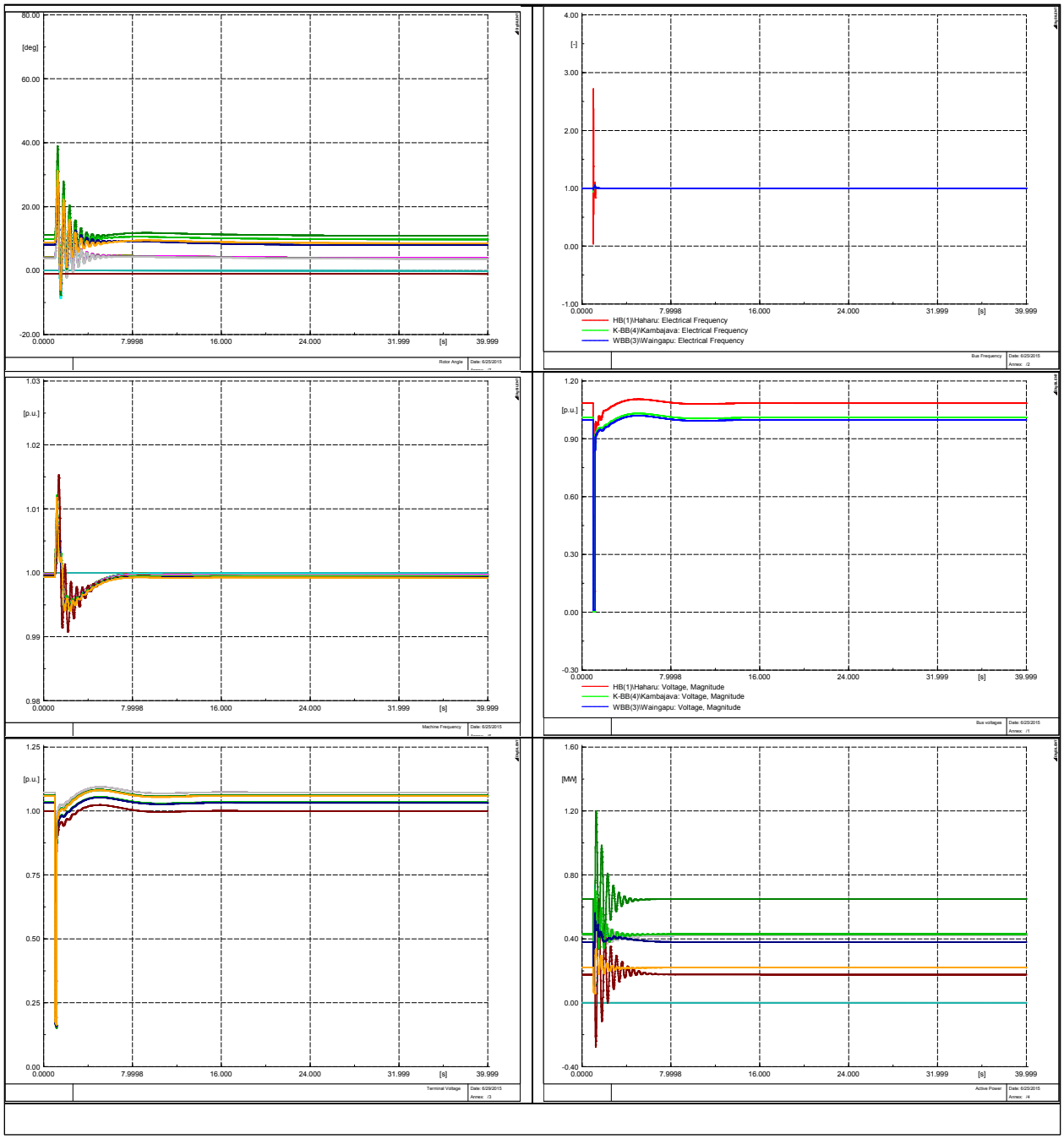

Figure G-2. High Wind High Load scenario for the Three-Phase-to-Ground Fault at Kambajawa Bus—Self-Clearing of Fault study case. (1) Rotor angle of generators, (2) bus frequency, (3) generator frequency, (4) bus voltage, (5) terminal voltage, and (6) real power of generators

This report is available at no cost from the National Renewable Energy Laboratory (NREL) at www.nrel.gov/publications.

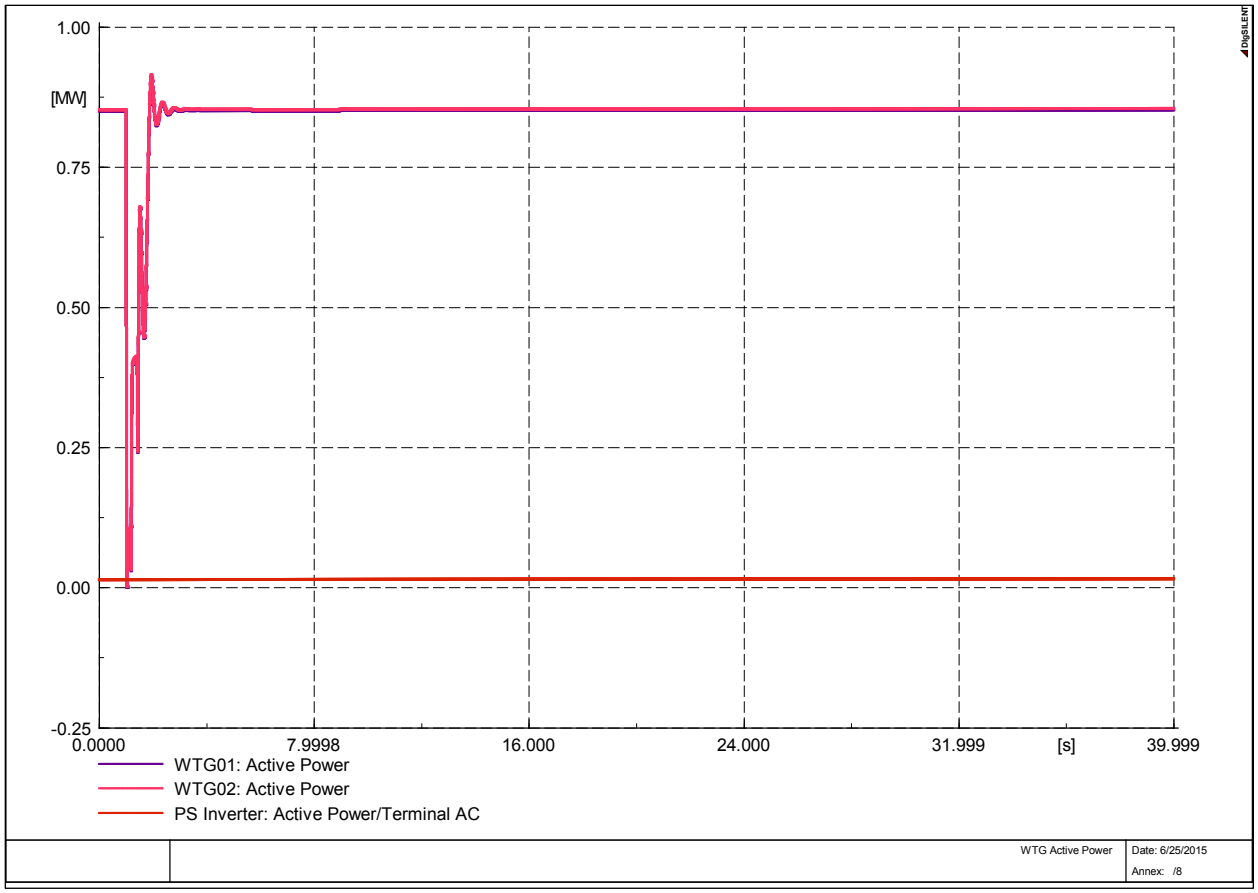

Figure G-3. Power output of two WTGs for the High Wind High Load scenario for the Three-Phase-to-Ground Fault at Kambajawa Bus—Self-Clearing of Fault study case

OBSERVATIONS: The system is stable, and the line loadings are within limits. The voltage drops to below 0.1 p.u. at the buses during the fault, and it recovers in 0.18 s. The low-voltage ride-through capability of the WTGs prevents them from going offline, and they recover to normal operation quickly after the fault clears.

This report is available at no cost from the National Renewable Energy Laboratory (NREL) at www.nrel.gov/publications.

High Wind Low Load

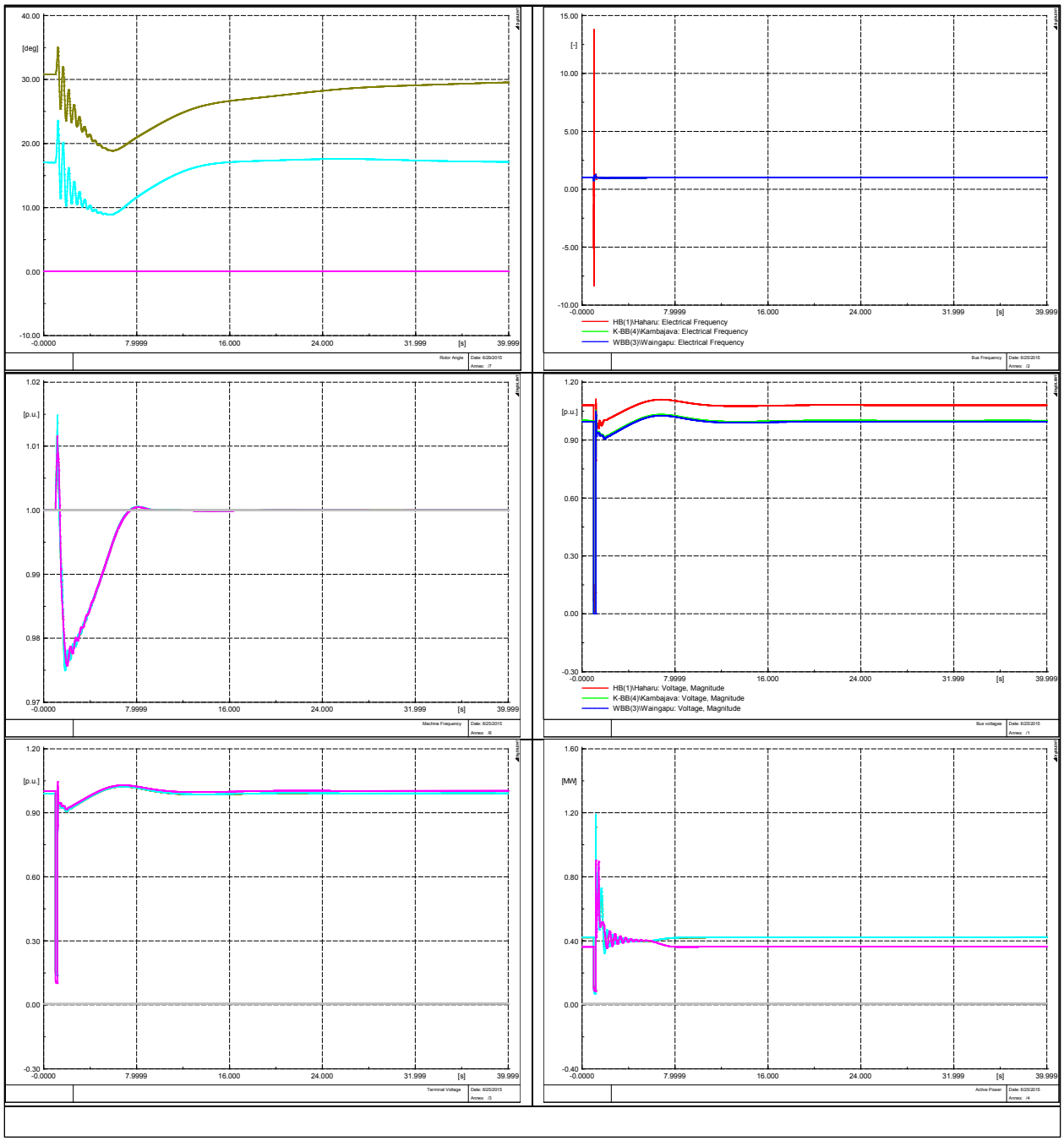

Figure G-4. High Wind Low Load scenario for the Three-Phase-to-Ground Fault at Kambajawa Bus—Self-Clearing of Fault study case. (1) Rotor angle of generators, (2) bus frequency, (3) generator frequency, (4) bus voltage, (5) terminal voltage, and (6) real power of generators

This report is available at no cost from the National Renewable Energy Laboratory (NREL) at www.nrel.gov/publications.

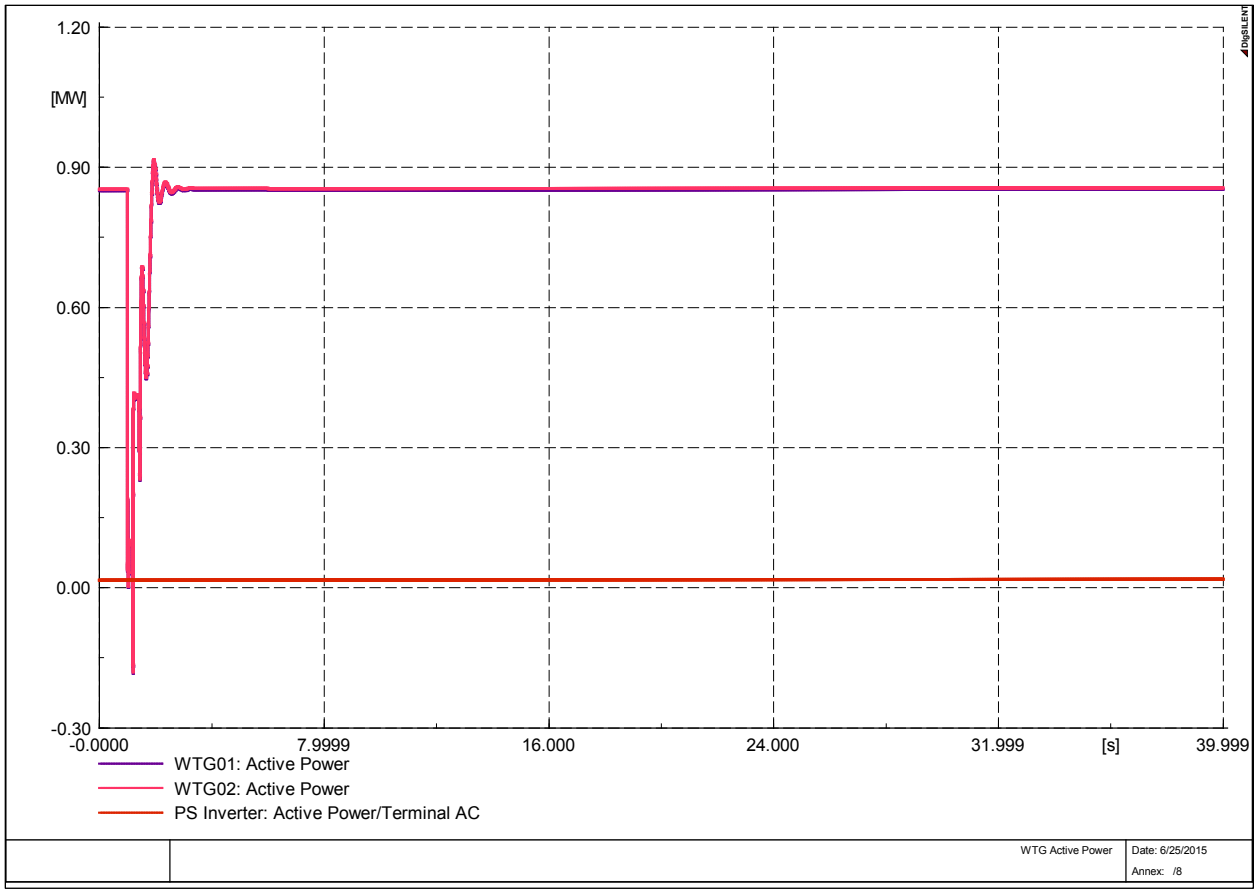

Figure G-5. Power output of two WTGs for the High Wind Low Load scenario for the Three-Phase-to-Ground Fault at Kambajawa Bus—Self-Clearing of Fault study case

OBSERVATIONS: The system is stable, and the line loadings are within limits. The voltage drops to below 0.2 p.u. at the buses during the fault, and it recovers in 0.18 s. The low-voltage ride-through capability of the WTGs prevents them from going offline, and they recover to normal operation quickly after the fault clears.

This report is available at no cost from the National Renewable Energy Laboratory (NREL) at www.nrel.gov/publications.

High Wind High Load with PowerStore

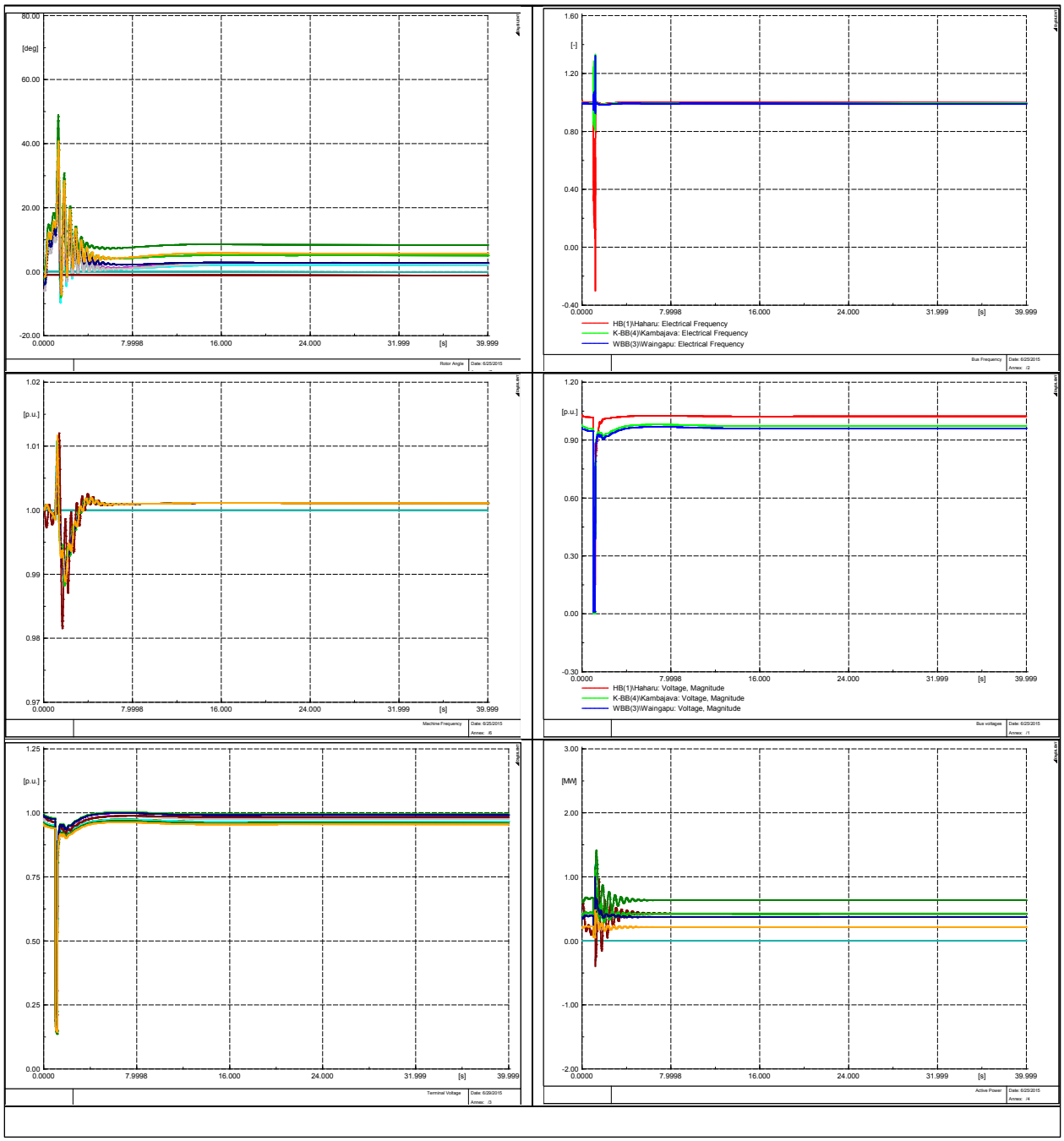

Figure G-6. High Wind High Load with PowerStore scenario for the Three-Phase-to-Ground Fault at Kambajawa Bus—Self-Clearing of Fault study case. (1). Rotor angle of generators, (2) bus frequency, (3) generator frequency, (4) bus voltage, (5) terminal voltage, and (6) real power of generators

This report is available at no cost from the National Renewable Energy Laboratory (NREL) at www.nrel.gov/publications.

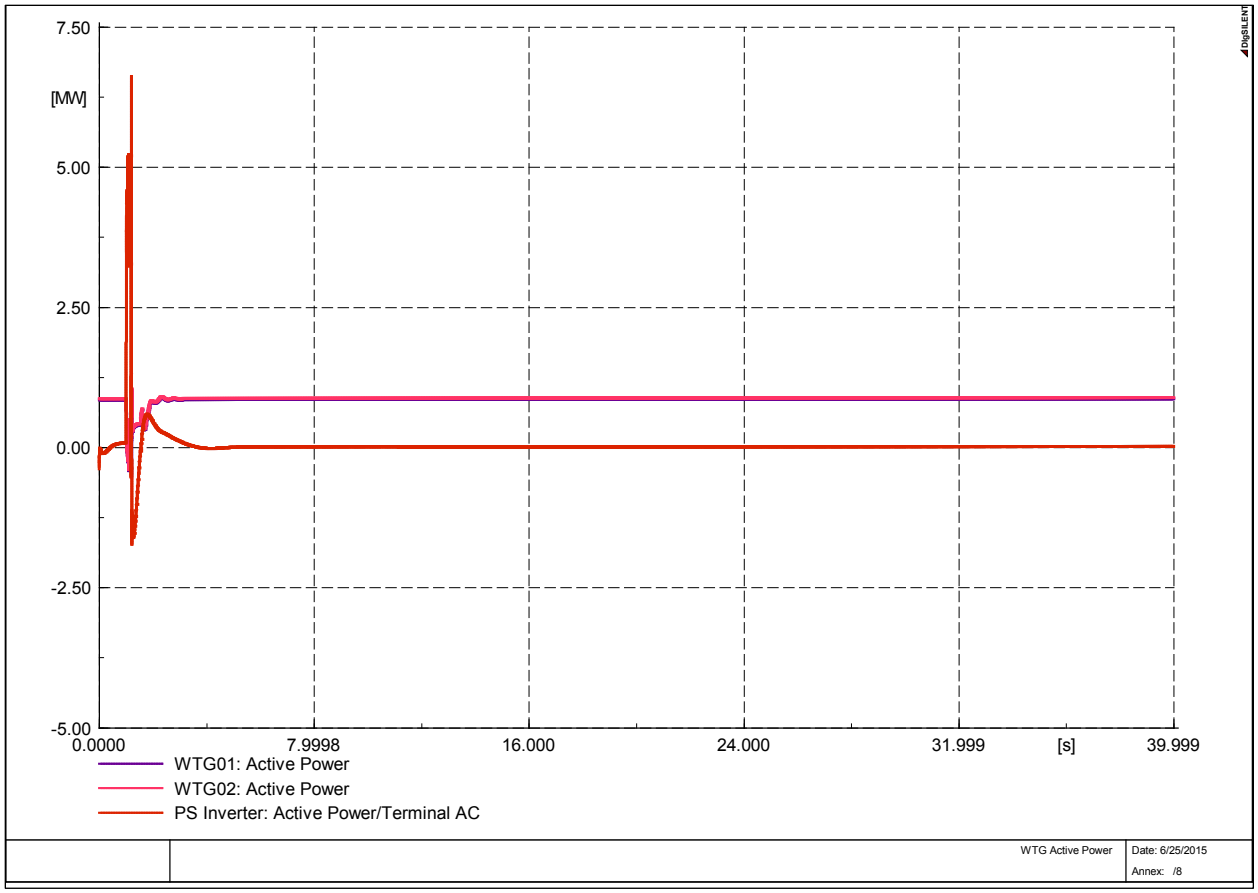

Figure G-7. Active power output of the two WTGs for the High Wind High Load with PowerStore scenario for the Three-Phase-to-Ground Fault at Kambajawa Bus—Self-Clearing of Fault study case

OBSERVATIONS: The system is stable, and the line loadings are within limits. The bus voltages dip below 0.50 p.u. at the H and W buses. The terminal voltage and power outputs of the generators are stable. PowerStore supplies power during the fault. The low-voltage ride-through capability of the WTGs prevents them from going offline, and they recover to normal operation quickly after the fault clears.

This report is available at no cost from the National Renewable Energy Laboratory (NREL) at www.nrel.gov/publications.

High Wind Low Load with PowerStore

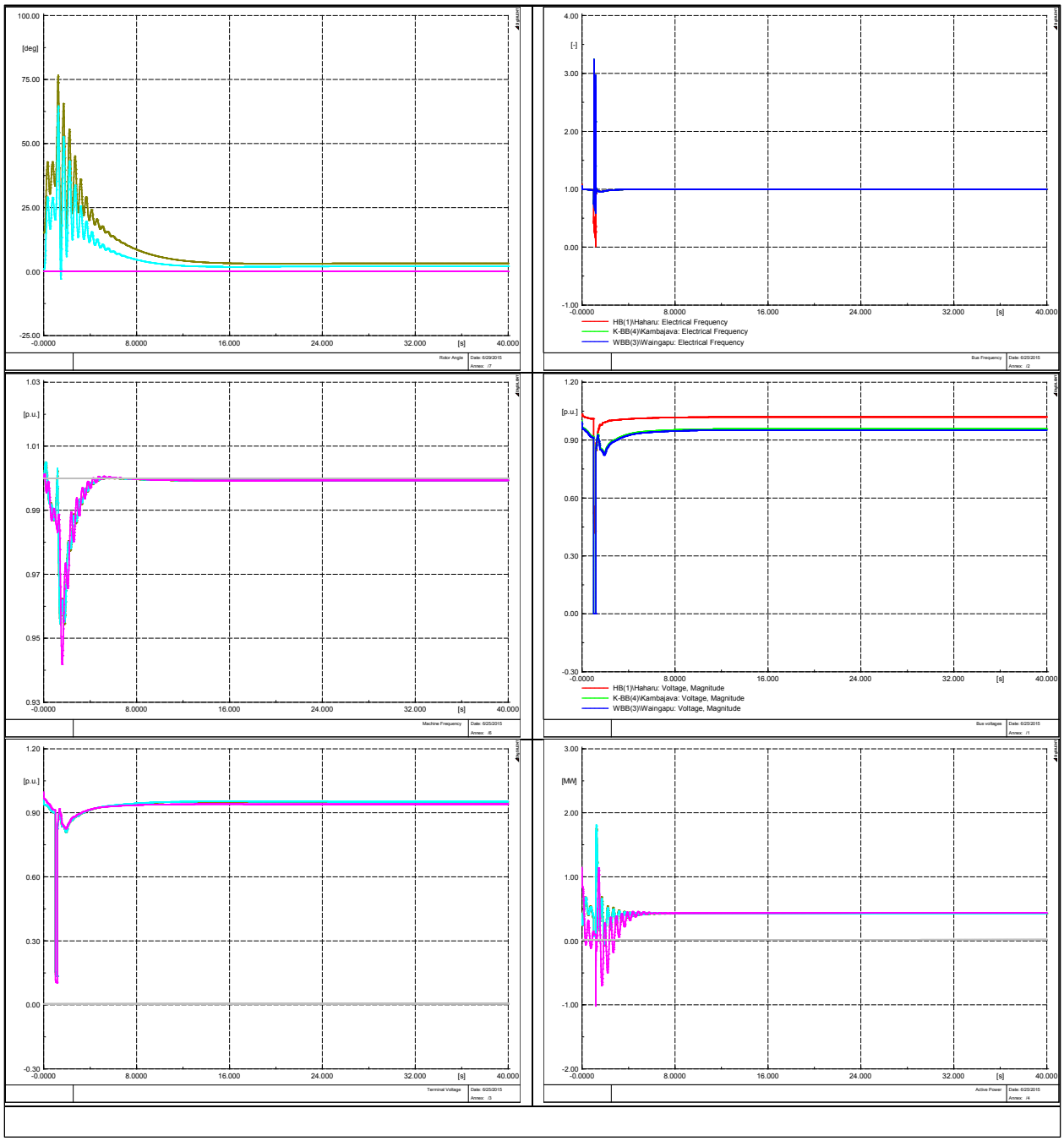

Figure G-8. High Wind Low Load with PowerStore scenario for the Three-Phase-to-Ground Fault at Kambajawa Bus—Self-Clearing of Fault study case. (1) Rotor angle of generators, (2) bus frequency, (3) generator frequency, (4) bus voltage, (5) terminal voltage, and (6) real power of generators

This report is available at no cost from the National Renewable Energy Laboratory (NREL) at www.nrel.gov/publications.

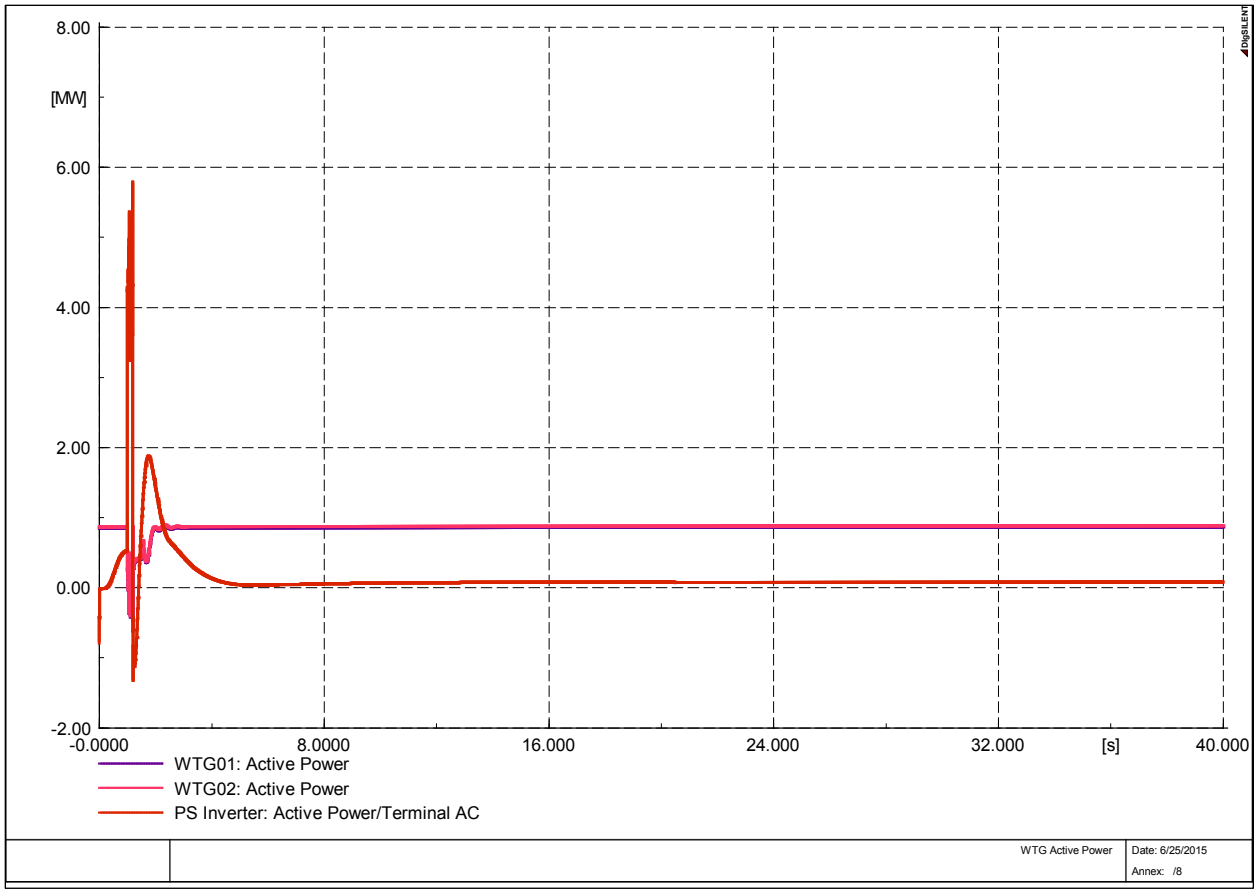

Figure G-9. Power output of two WTGs for the High Wind Low Load with PowerStore scenario for the Three-Phase-to-Ground Fault at Kambajawa Bus—Self-Clearing of Fault study case

OBSERVATIONS: The system is stable, and the line loadings are within limits. The bus voltages dip below 0.50 p.u. at the H and W buses. PowerStore supplies power during the fault when the WTGs are down. It supplies approximately 6 MW at the fault.

This report is available at no cost from the National Renewable Energy Laboratory (NREL) at www.nrel.gov/publications.

Three-Phase-to-Ground Fault at Waingapu Bus—Self-Clearing of Fault

In this study case, a three-phase-to-ground fault at the Waingapu Bus is analyzed with two 850-kW WTGs at Haharu. The fault occurs at 1 s, and it self-clears in 180 ms. The four scenarios for this case are presented below.

High Wind High Load

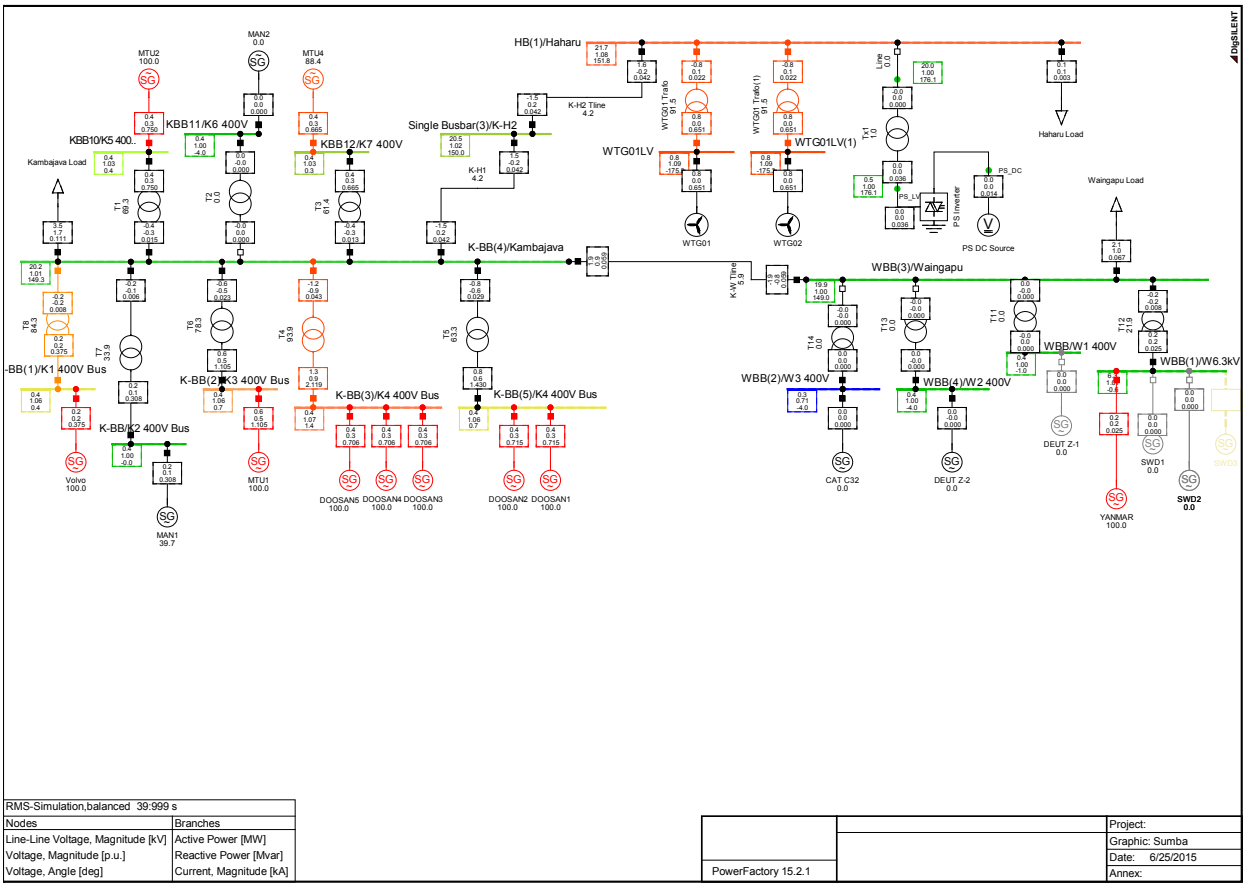

Figure G-10. Schematic layout for the High Wind High Load scenario for the Three-Phase-to-Ground Fault at Waingapu Bus—Self-Clearing of Fault study case

This report is available at no cost from the National Renewable Energy Laboratory (NREL) at www.nrel.gov/publications.

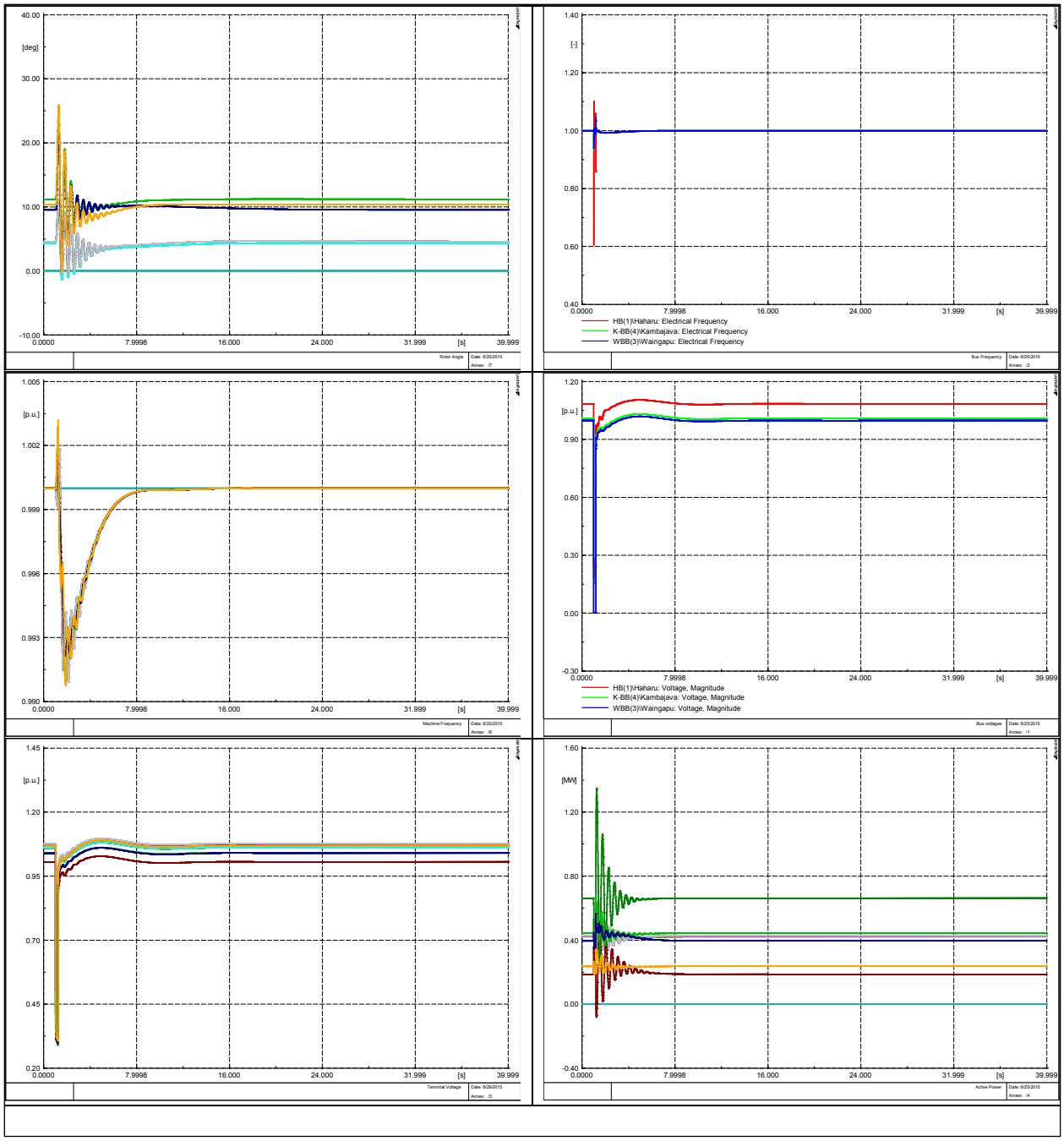

Figure G-11. High Wind High Load scenario for the Three-Phase-to-Ground Fault at Waingapu Bus—Self-Clearing of Fault study case. (1) Rotor angle of generators, (2) bus frequency, (3) generator frequency, (4) bus voltage, (5) terminal voltage, and (6) real power of generators

This report is available at no cost from the National Renewable Energy Laboratory (NREL) at www.nrel.gov/publications.

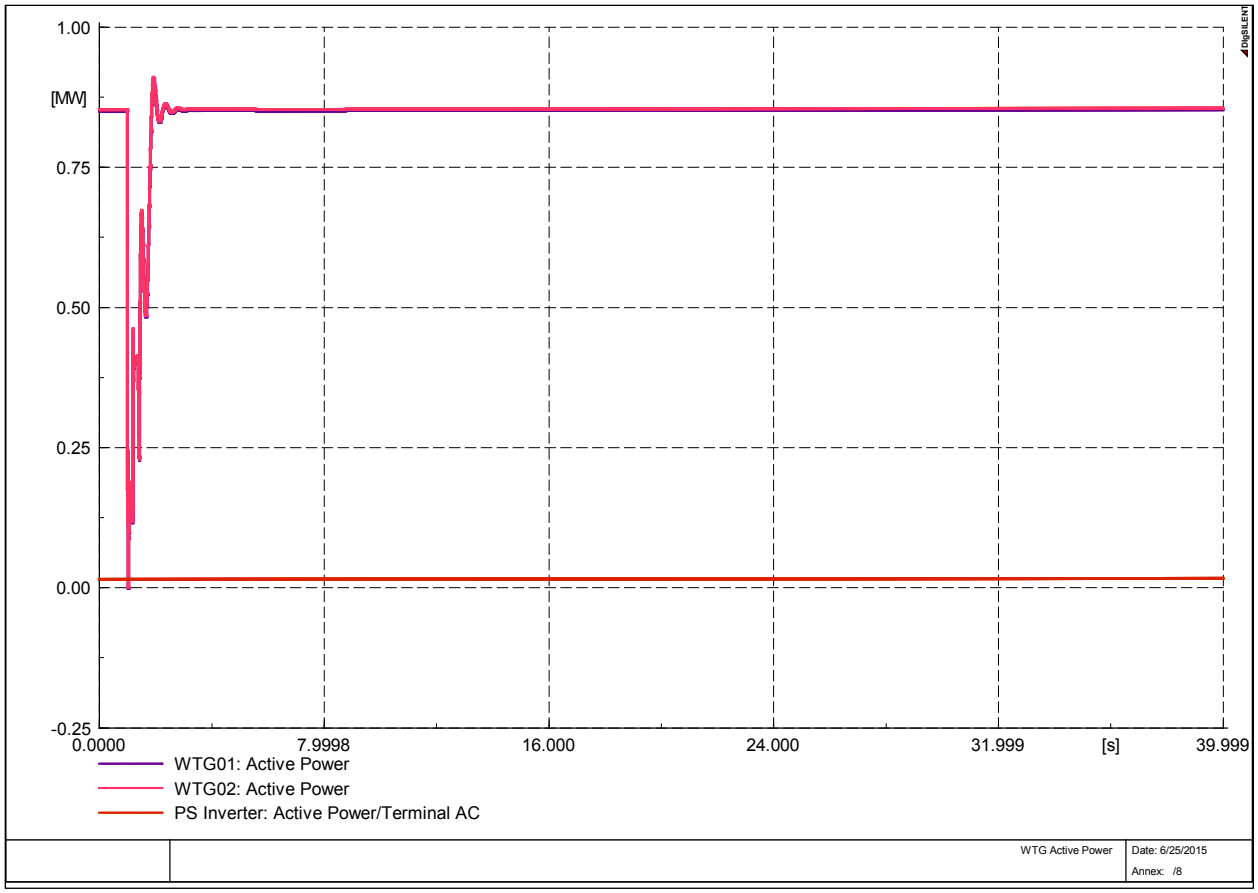

Figure G-12. Power output of two WTGs for the High Wind High Load scenario for the Three-Phase-to-Ground Fault at Waingapu Bus—Self-Clearing of Fault study case

OBSERVATIONS: The system is stable, and the line loadings are within limits. The voltage drops to below 0.2 p.u. at the buses during the fault, and it recovers in 0.18 s. The low-voltage ride-through capability of the WTGs prevents them from going offline, and they recover to normal operation quickly after the fault clears.

This report is available at no cost from the National Renewable Energy Laboratory (NREL) at www.nrel.gov/publications.

High Wind Low Load

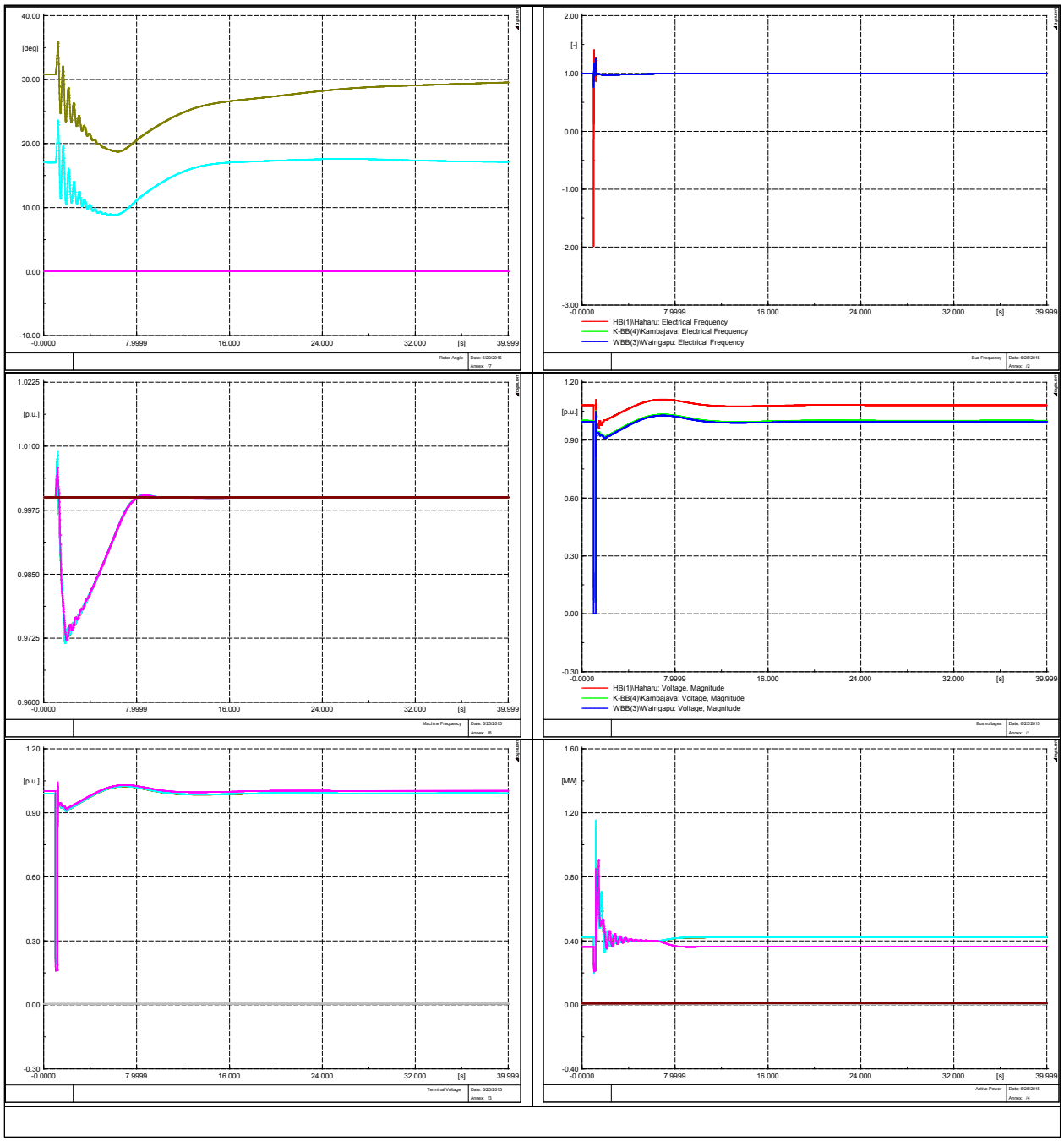

Figure G-13. High Wind Low Load scenario and Three-Phase-to-Ground Fault at Waingapu Bus—Self-Clearing of Fault study case. (1) Rotor angle of generators, (2) bus frequency, (3) generator frequency, (4) bus voltage, (5) terminal voltage, and (6) real power of generators

This report is available at no cost from the National Renewable Energy Laboratory (NREL) at www.nrel.gov/publications.

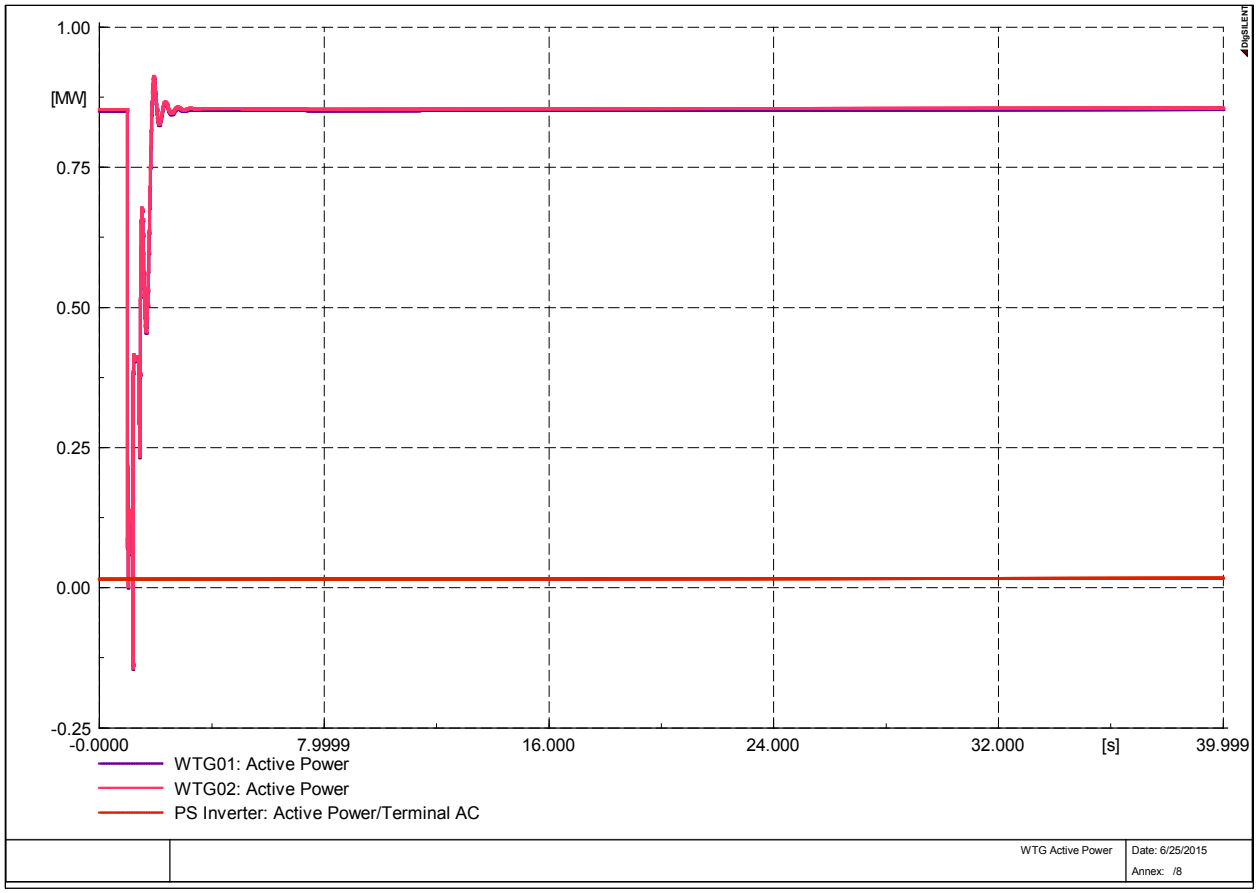

Figure G-14. Power output of two WTGs for the High Wind Low Load scenario for the Three-Phase-to-Ground Fault at Waingapu Bus—Self-Clearing of Fault study case

OBSERVATIONS: The system is stable, and the line loadings are within limits. The voltage drops to below 0.25 p.u. at the buses during the fault, and it recovers in 0.18 s. The low-voltage ride-through capability of the WTGs prevents them from going offline, and they recover to normal operation quickly after the fault clears.

This report is available at no cost from the National Renewable Energy Laboratory (NREL) at www.nrel.gov/publications.

High Wind High Load with PowerStore

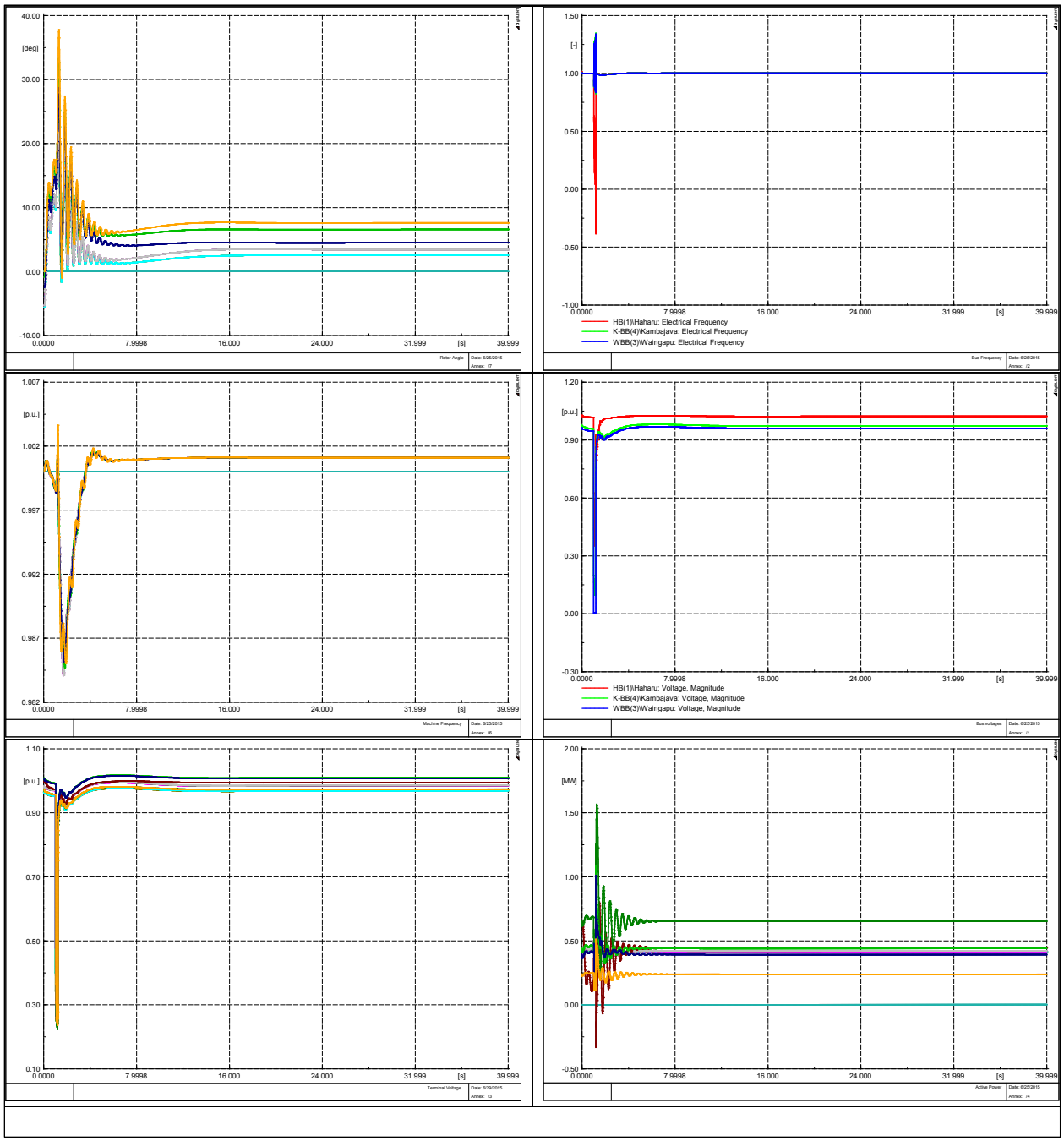

Figure G-15. High Wind High Load with PowerStore scenario for the Three-Phase-to-Ground Fault at Waingapu Bus—Self-Clearing of Fault study case. (1) Rotor angle of generators, (2) bus frequency, (3) generator frequency, (4) bus voltage, (5) terminal voltage, and (6) real power of generators

This report is available at no cost from the National Renewable Energy Laboratory (NREL) at www.nrel.gov/publications.

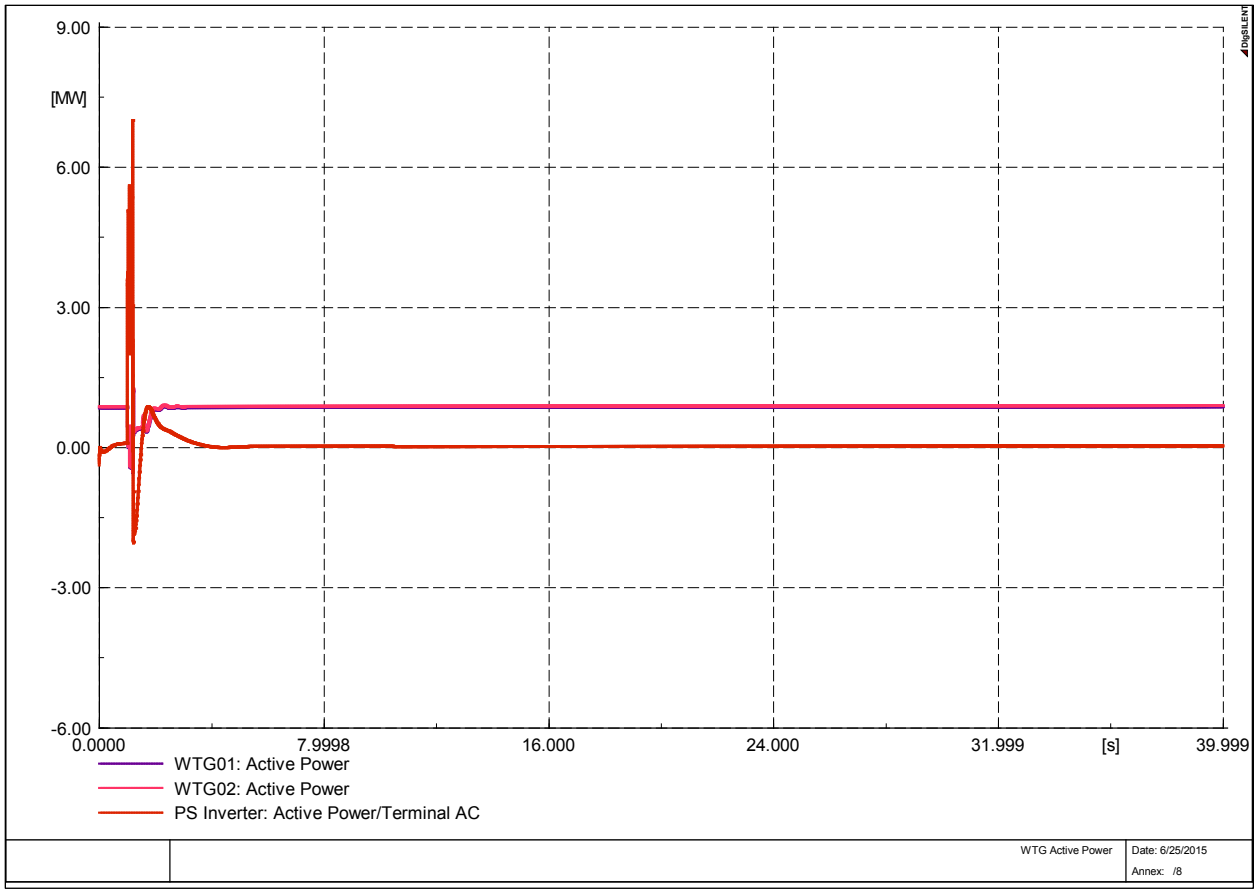

Figure G-16. Power output of two WTGs for the High Wind High Load with PowerStore scenario for the Three-Phase-to-Ground Fault at Waingapu Bus—Self-Clearing of Fault study case

OBSERVATIONS: The system is stable, and the line loadings are within limits. The frequency drops to 0.3 p.u., and it recovers in approximately 0.18 s. The bus voltages dip below 0.30 p.u. at the K and W buses. The terminal voltage and power outputs of the generators are stable. PowerStore supplies power during the fault. The low-voltage ride-through capability of the WTGs prevents them from going offline, and they recover to normal operation quickly after the fault clears.

This report is available at no cost from the National Renewable Energy Laboratory (NREL) at www.nrel.gov/publications.

High Wind Low Load with PowerStore

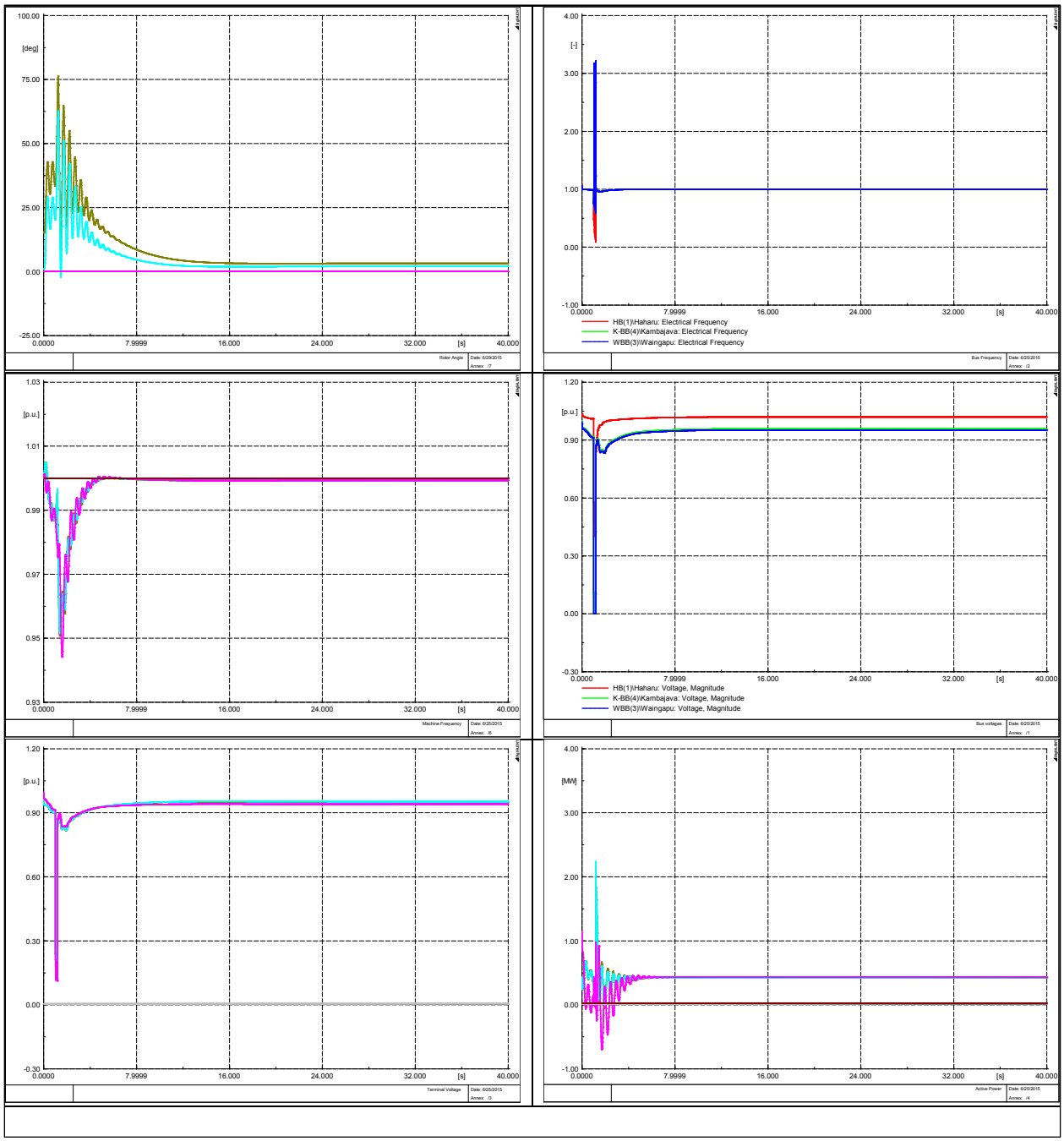

Figure G-17. High Wind Low Load with PowerStore scenario for the Three-Phase-to-Ground Fault at Waingapu Bus—Self-Clearing of Fault study case. (1) Rotor angle of generators, (2) bus frequency, (3) generator frequency, (4) bus voltage, (5) terminal voltage, and (6) real power of generators

This report is available at no cost from the National Renewable Energy Laboratory (NREL) at www.nrel.gov/publications.

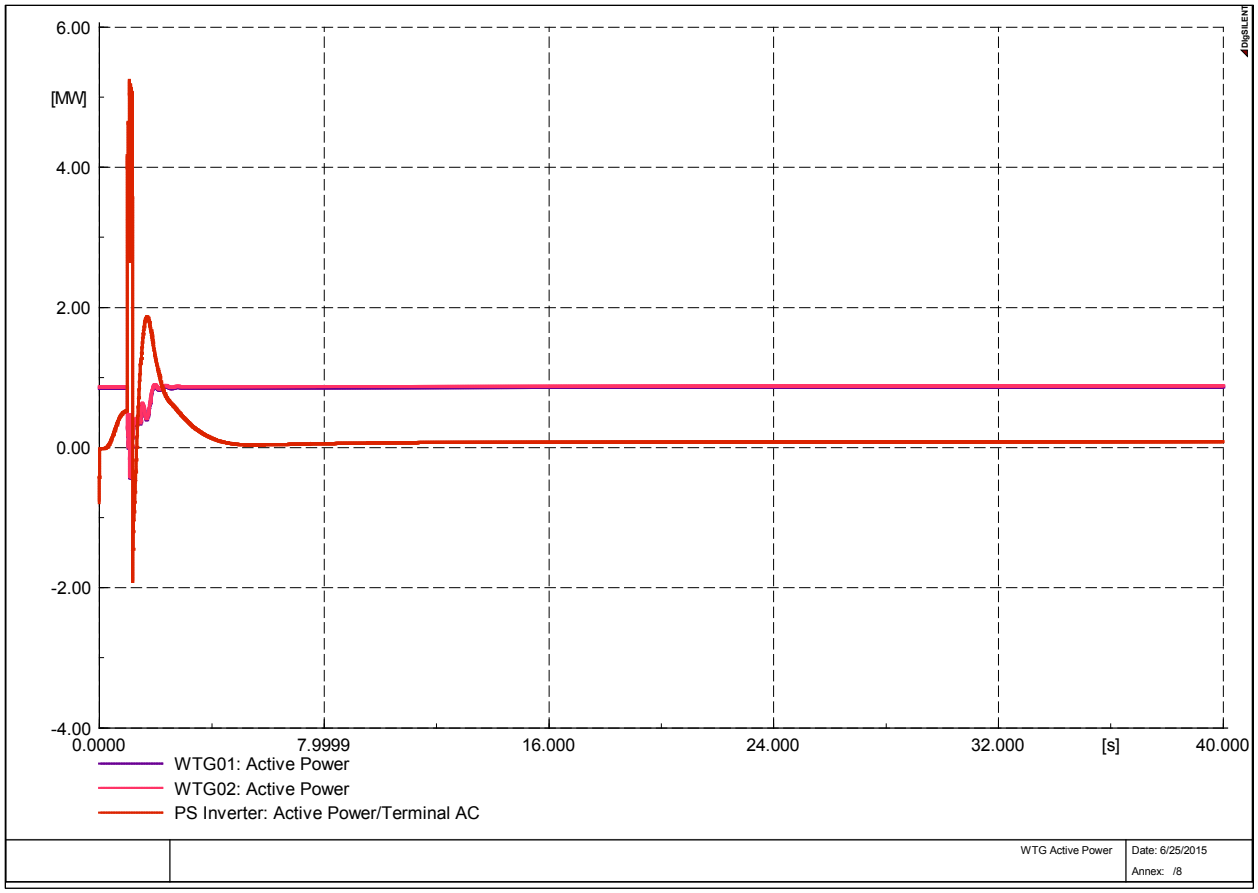

Figure G-18. Power output of two WTGs for the High Wind Low Load with PowerStore scenario for the Three-Phase-to-Ground Fault at Waingapu Bus—Self-Clearing of Fault study case

OBSERVATIONS: The system is stable, and the line loadings are within limits. The frequency drops to 0.3 p.u., and it recovers in approximately 0.18 s. The bus voltages dip below 0.30 p.u. at the K and W buses. The terminal voltage and power outputs of generators are stable. PowerStore supplies power during the fault. The low-voltage ride-through capability of the WTGs prevents them from going offline, and they recover to normal operation quickly after the fault clears.

This report is available at no cost from the National Renewable Energy Laboratory (NREL) at www.nrel.gov/publications.

Wind Power Plant Outage at Haharu Bus—No Self-Clearing of Fault

In this study case, the loss of two 850-kW WTGs at the Haharu Bus due to a wind turbine fault is analyzed. The fault occurs at 1 s, and there is no self-clearing.

High Wind High Load

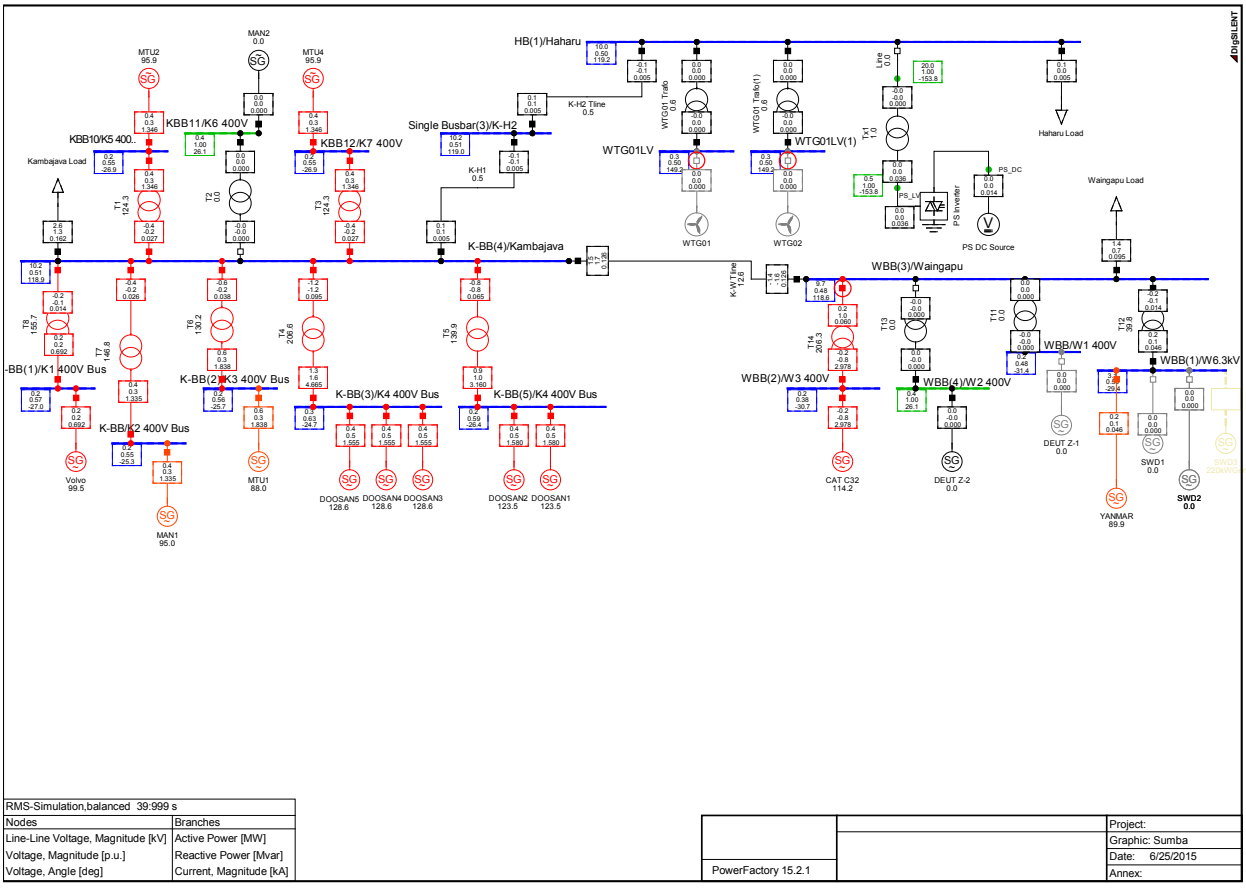

Figure G-19. Schematic layout for the High Wind High Load scenario and Wind Power Plant Outage at Haharu Bus—No Self-Clearing of Fault study case

This report is available at no cost from the National Renewable Energy Laboratory (NREL) at www.nrel.gov/publications.

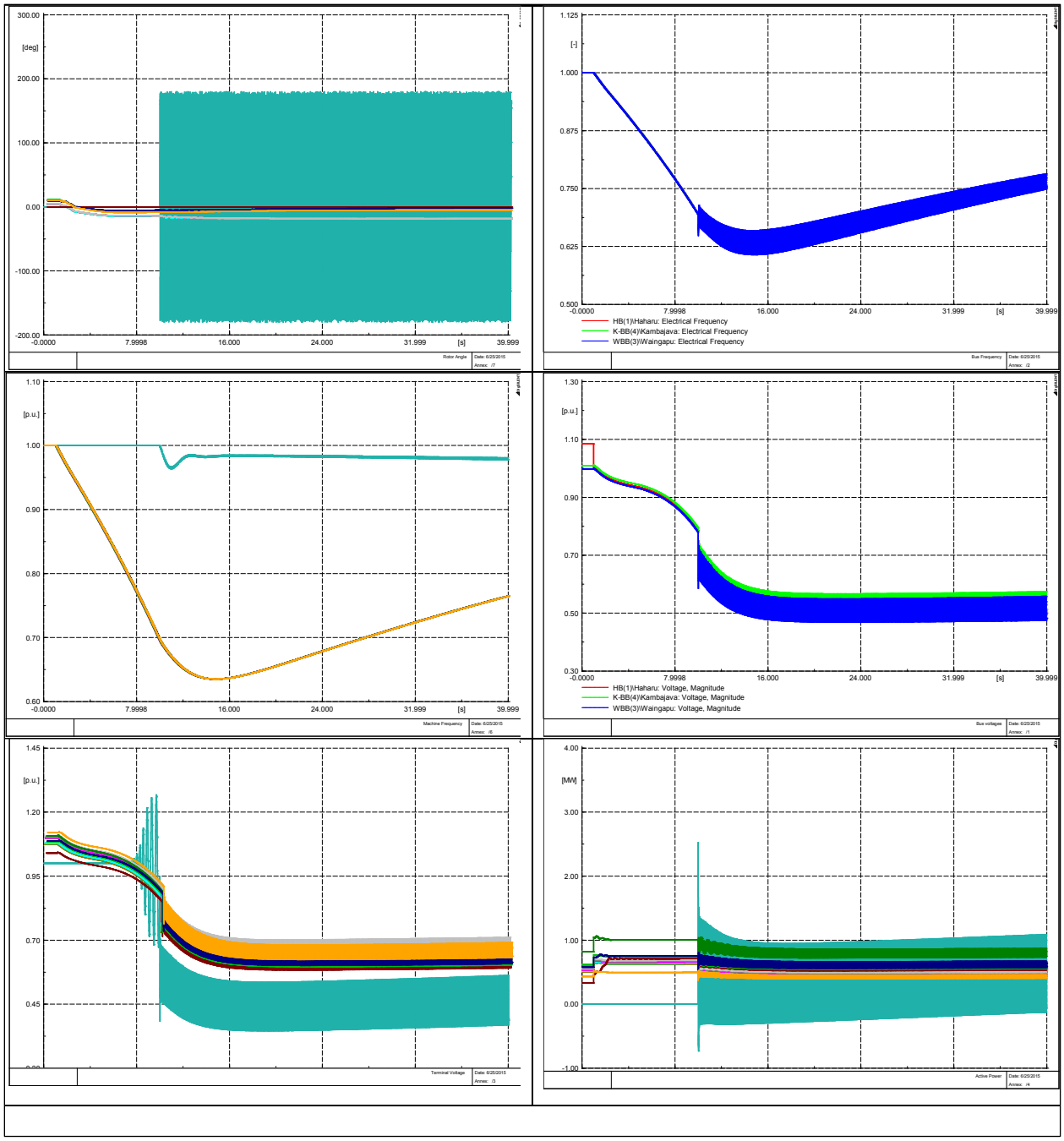

Figure G-20. High Wind High Load scenario for the Wind Power Plant Outage at Haharu Bus—No Self-Clearing of Fault study case. (1) Rotor angle of generators, (2) bus frequency, (3) generator frequency, (4) bus voltage, (5) terminal voltage, and (6) real power of generators

This report is available at no cost from the National Renewable Energy Laboratory (NREL) at www.nrel.gov/publications.

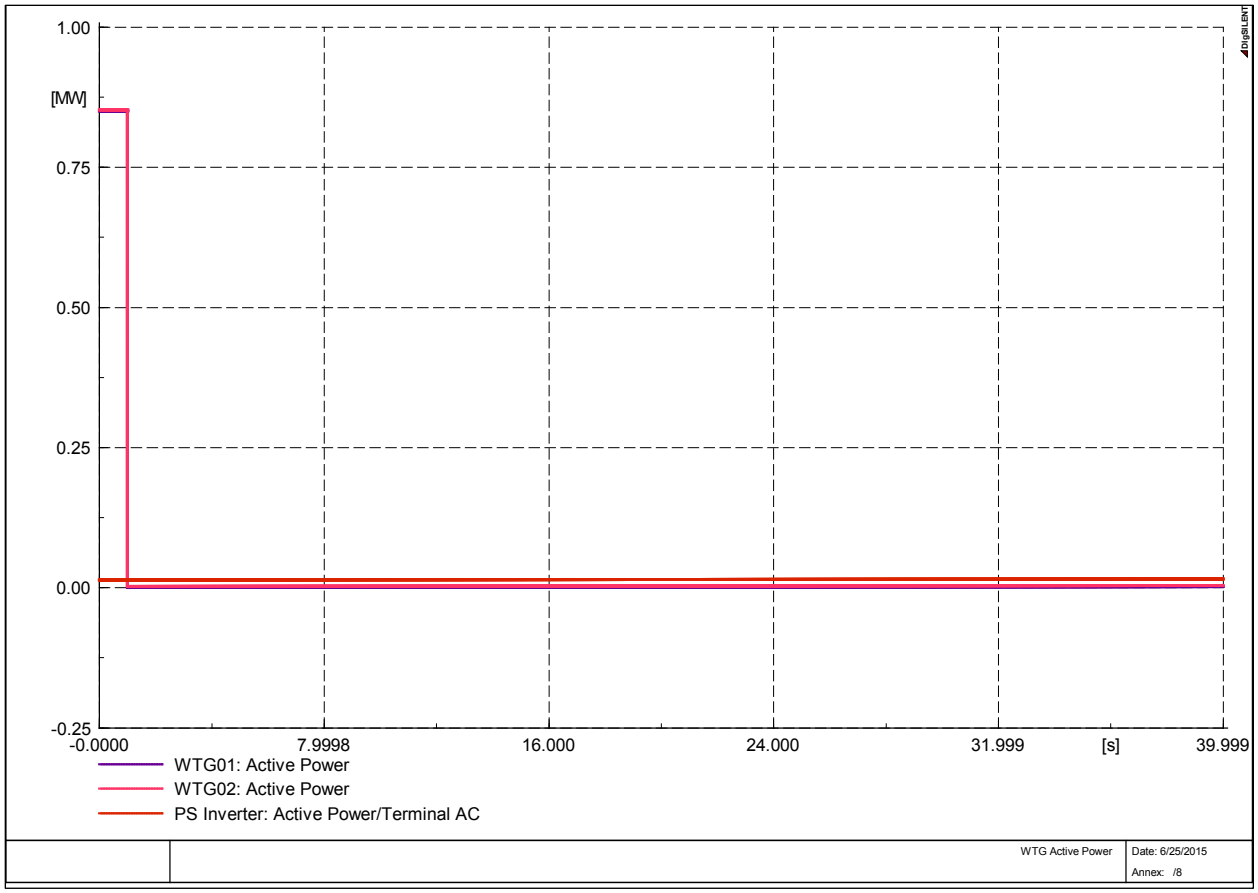

Figure G-21. Power output of two WTGs for the High Wind High Load scenario for the Wind Power Plant Outage at Haharu Bus—No Self-Clearing of Fault study case

OBSERVATIONS: The frequency keeps falling after the fault, and there is a loss of synchronism in the system. This is expected because the loss of two 850-kW WTGs with no self-clearing is a large loss of generation from which the grid cannot recover.

This report is available at no cost from the National Renewable Energy Laboratory (NREL) at www.nrel.gov/publications.

High Wind Low Load

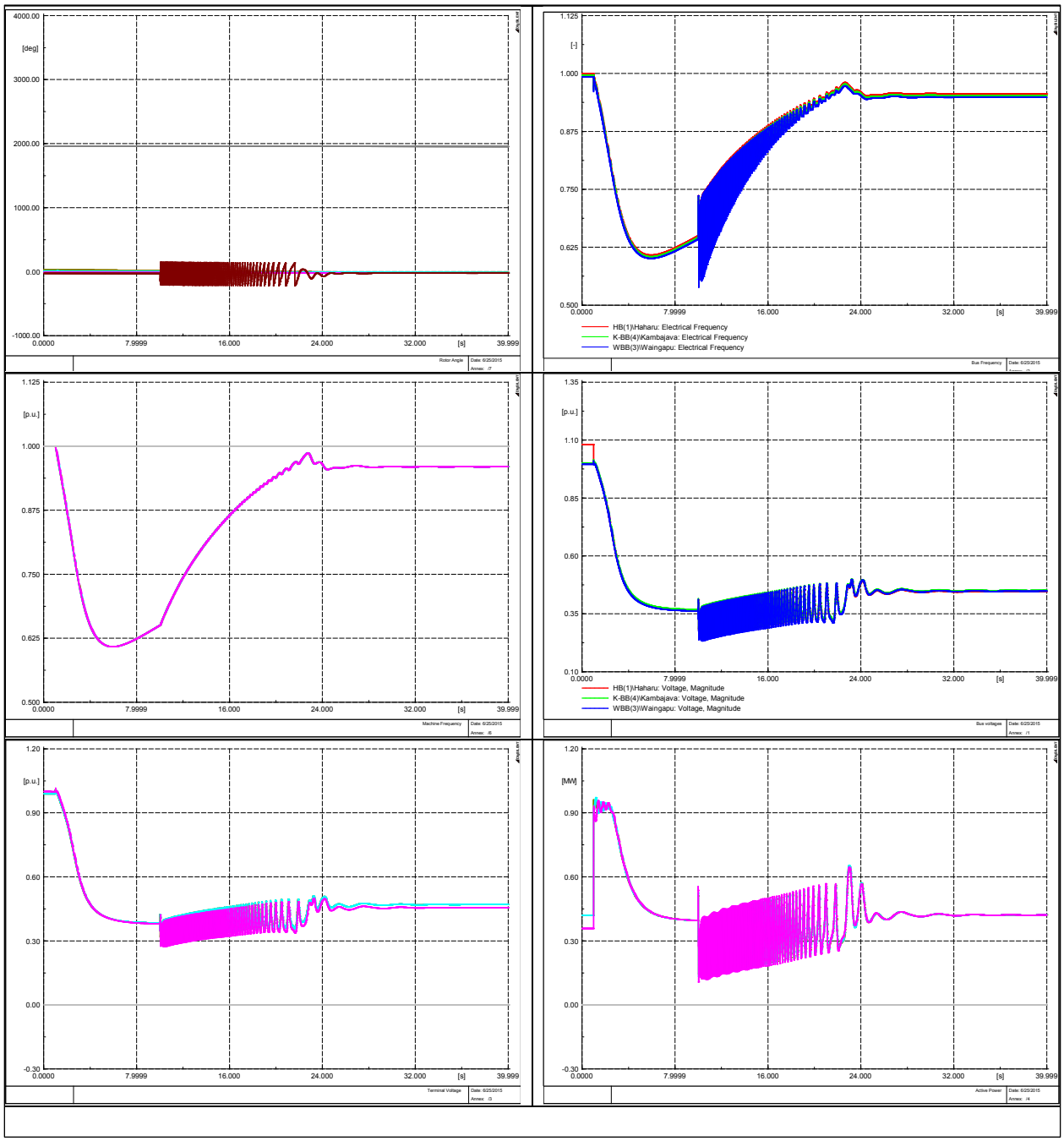

Figure G-22. High Wind Low Load scenario for the Wind Power Plant Outage at Haharu Bus—No Self-Clearing of Fault study case. (1) Rotor angle of generators, (2) bus frequency, (3) generator frequency, (4) bus voltage, (5) terminal voltage, and (6) real power of generators

This report is available at no cost from the National Renewable Energy Laboratory (NREL) at www.nrel.gov/publications.

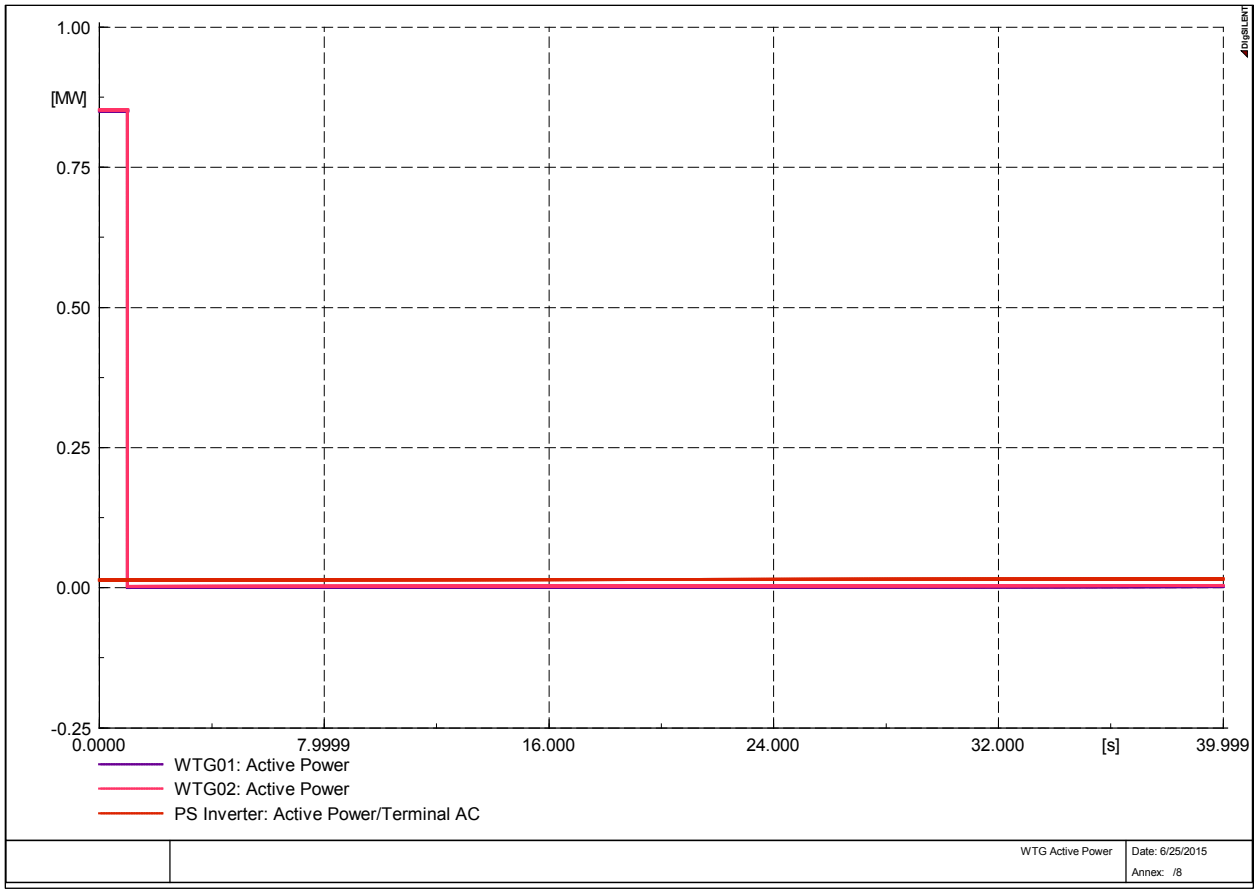

Figure G-23. Power output of two WTGs for the High Wind Low Load with PowerStore scenario for the Wind Power Plant Outage at Haharu Bus—No Self-Clearing of Fault study case

OBSERVATIONS: The frequency keeps falling after the fault, and there is a loss of synchronism in the system. This is expected because the loss of two 850-kW WTGs with no self-clearing is a large loss of generation from which the grid cannot recover.

This report is available at no cost from the National Renewable Energy Laboratory (NREL) at www.nrel.gov/publications.

High Wind High Load with PowerStore

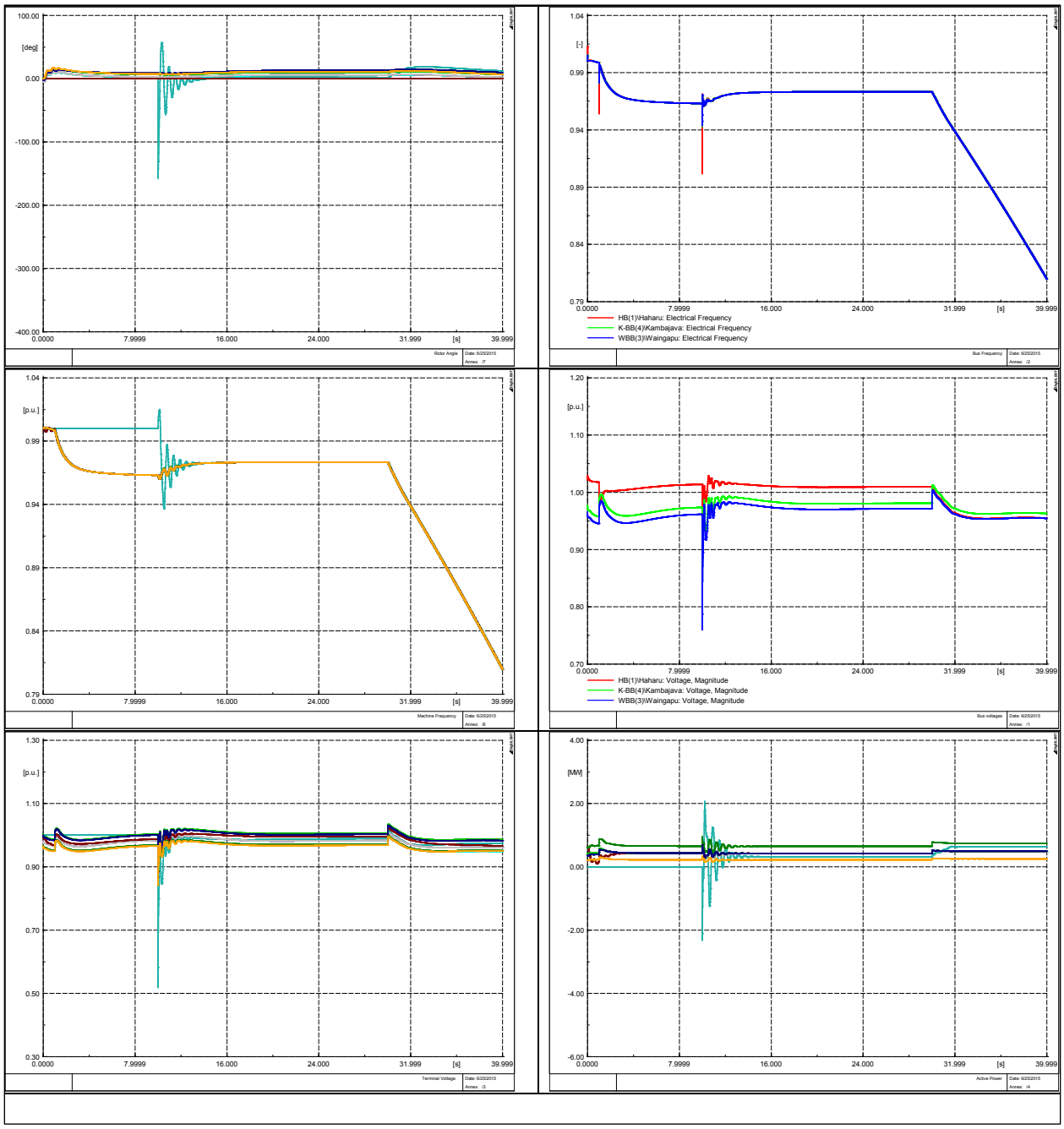

Figure G-24. High Wind High Load scenario with PowerStore for the Wind Power Plant Outage at Haharu Bus—No Self-Clearing of Fault study case. (1) Rotor angle of generators, (2) bus frequency, (3) generator frequency, (4) bus voltage, (5) terminal voltage, and (6) real power of generators

This report is available at no cost from the National Renewable Energy Laboratory (NREL) at www.nrel.gov/publications.

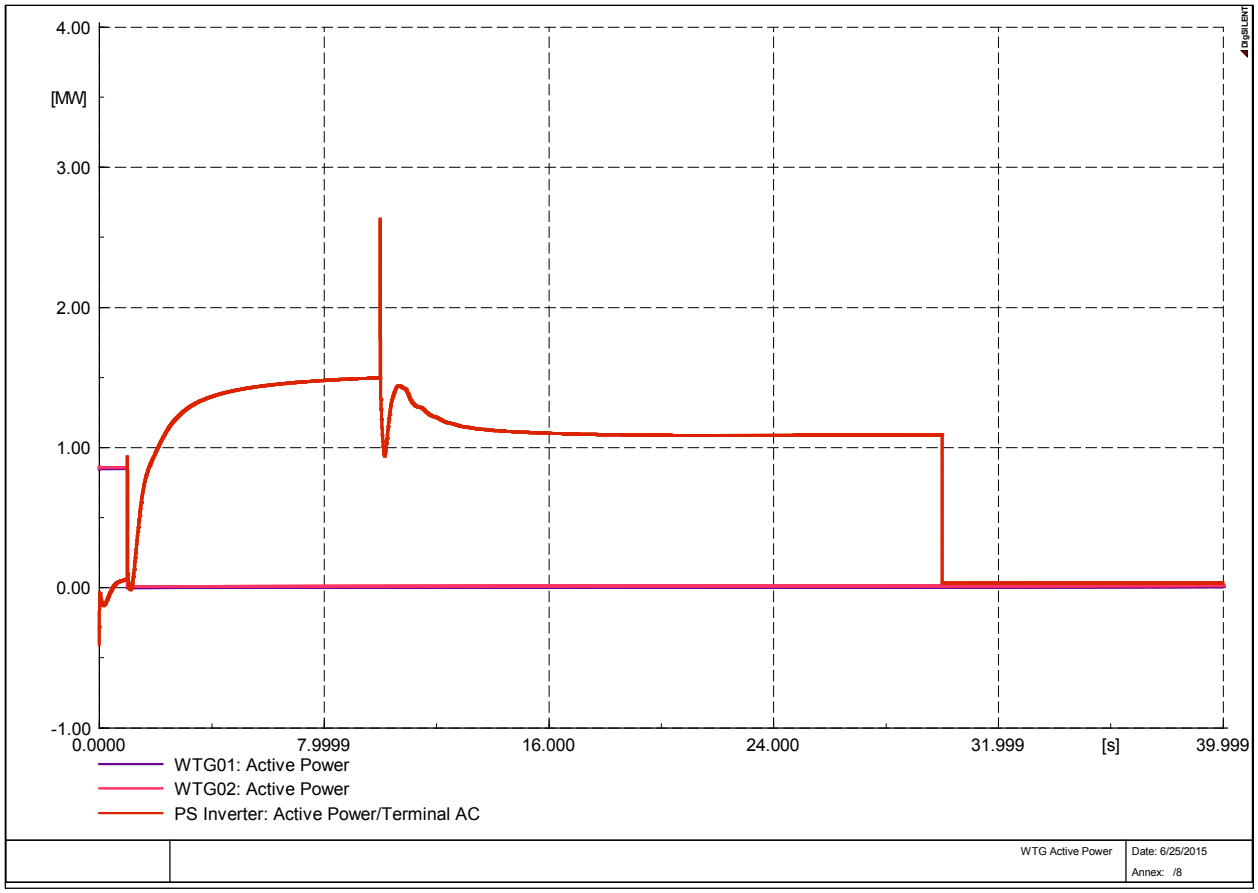

Figure G-25. Power output of two WTGs for the High Wind High Load scenario with PowerStore for the Wind Power Plant Outage at Haharu Bus—No Self-Clearing of Fault study case

OBSERVATIONS: The system stabilizes because PowerStore supplies power when the two 0.85-MW WTGs go down. It supplies approximately 1.5 MW of active power from 1 s to 10 s. After 10 s, CAT32 starts supplying 0.55 MW of power, thus reducing the contribution of PowerStore to 0.95 MW. After 30 s, when PowerStore had depleted energy, there is a frequency runaway because there is a large loss of power. To prevent a frequency runaway, two additional CAT32 generators with capacities of 0.55 kW and 10-s cold-start times are required in reserve, or a plan to implement load-shedding in such cases is required.

This report is available at no cost from the National Renewable Energy Laboratory (NREL) at www.nrel.gov/publications.

High Wind Low Load with PowerStore

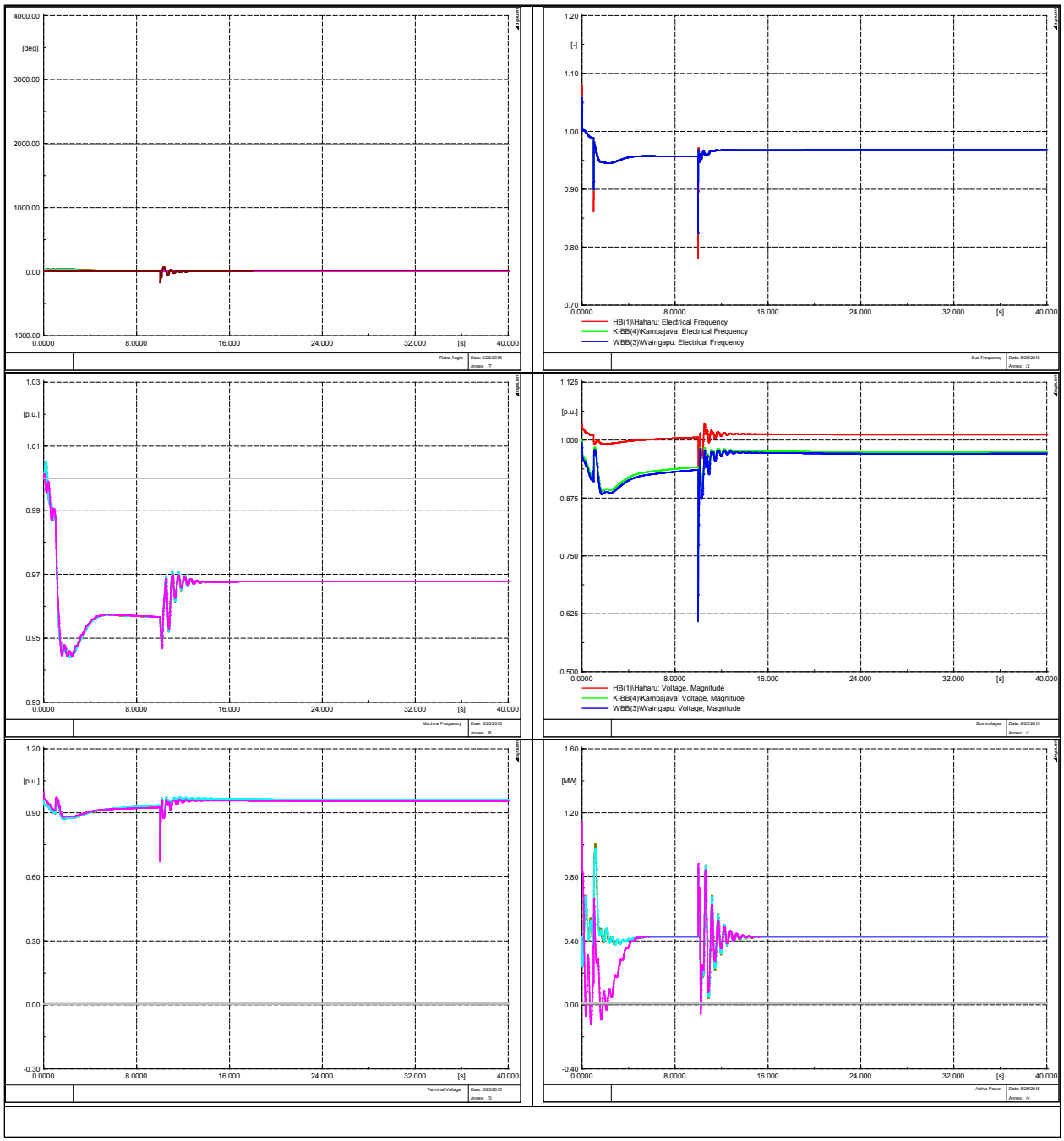

Figure G-26. High Wind Low Load with PowerStore scenario for the Wind Power Plant Outage at Haharu Bus—No Self-Clearing of Fault study case. (1) Rotor angle of generators, (2) bus frequency, (3) generator frequency, (4) bus voltage, (5) terminal voltage, and (6) real power of generators

This report is available at no cost from the National Renewable Energy Laboratory (NREL) at www.nrel.gov/publications.

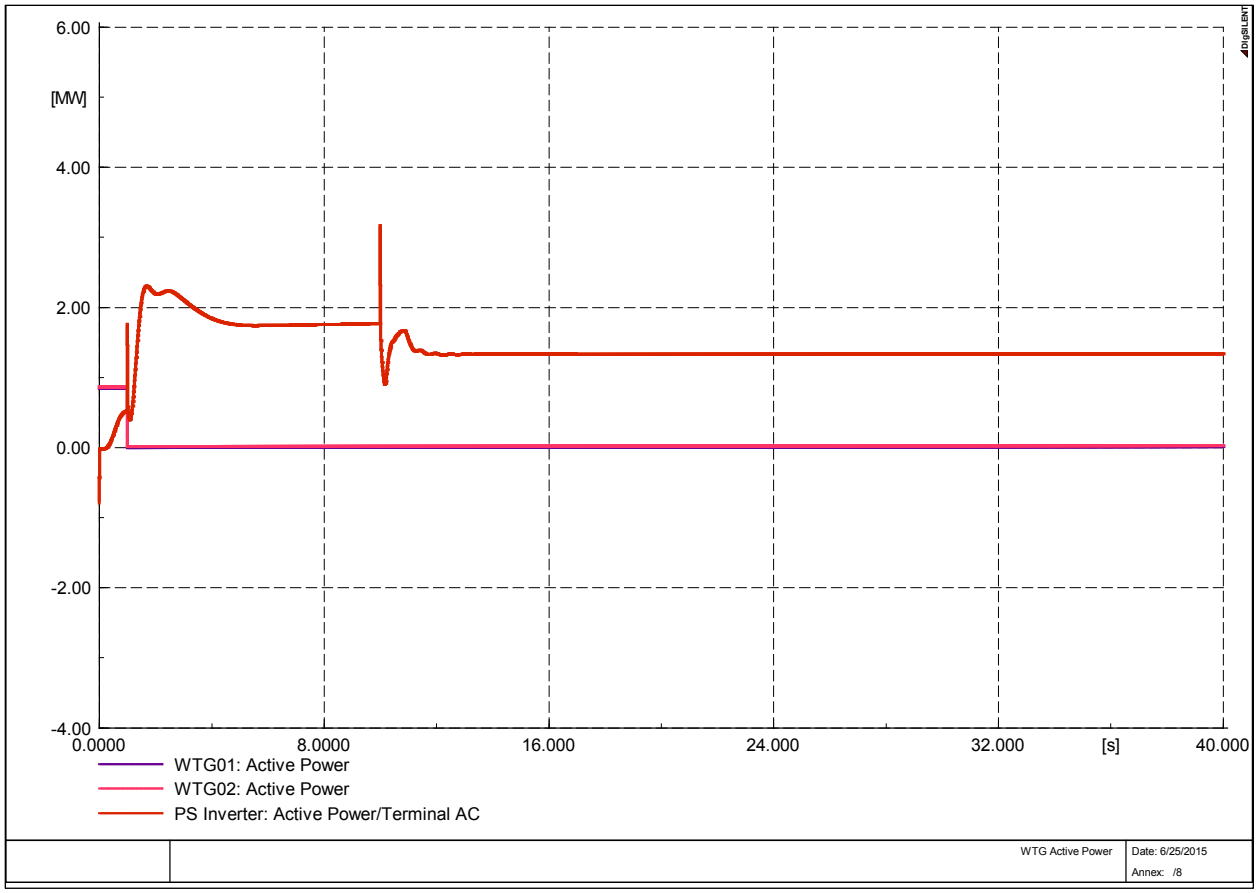

Figure G-27. Power output of two WTGs for the High Wind Low Load with PowerStore scenario for the Wind Power Plant Outage at Haharu Bus—No Self-Clearing of Fault study case

OBSERVATIONS: The system stabilizes because PowerStore supplies power when the two 0.85-MW WTGs go down. It supplies approximately 1.8 MW of active power from 1 s to 10 s. After 10 s, CAT32 starts supplying 0.55 MW of power, thus reducing the contribution of PowerStore to 1.2 MW. After 30 s, when PowerStore had depleted energy, there is a frequency runaway because there is a large loss of power. To prevent a frequency runaway, two additional CAT32 generators with capacities of 0.55 kW and 10-s cold-start time are required in reserve, or a plan to implement load-shedding in such cases is required.

This report is available at no cost from the National Renewable Energy Laboratory (NREL) at www.nrel.gov/publications.

Partial Generator Outage at Kambajawa Bus—No Self-Clearing of Fault

In this study case, a generation loss of 650 kW during high load and a loss of 420 kW during low load at Kambajawa Bus is analyzed. The fault occurs at 1 s, and there is no self-clearing. The four scenarios for this case are presented below.

High Wind High Load

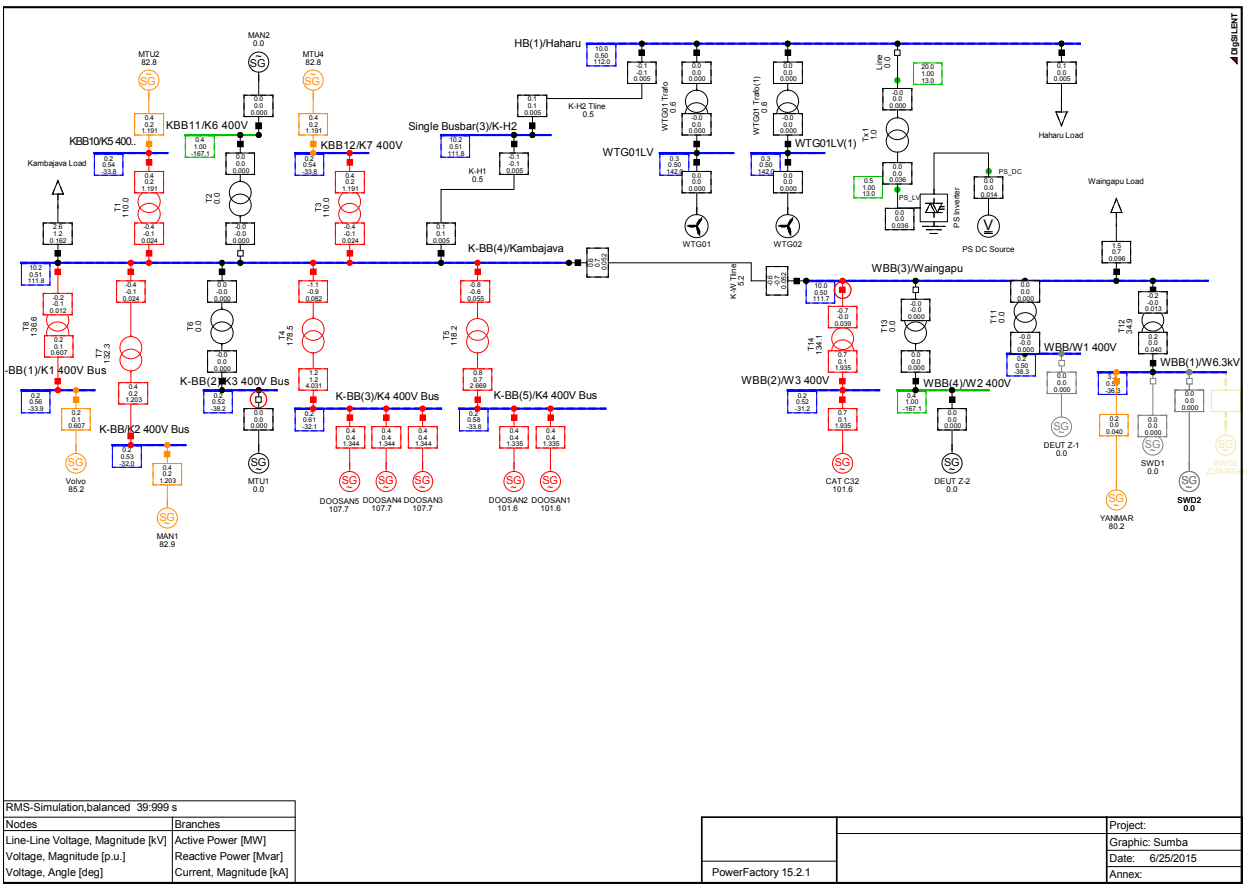

Figure G-28. Schematic layout for the High Wind High Load scenario for the Partial Generator (650 kW) Outage at Kambajawa Bus—No Self-Clearing of Fault study case

This report is available at no cost from the National Renewable Energy Laboratory (NREL) at www.nrel.gov/publications.

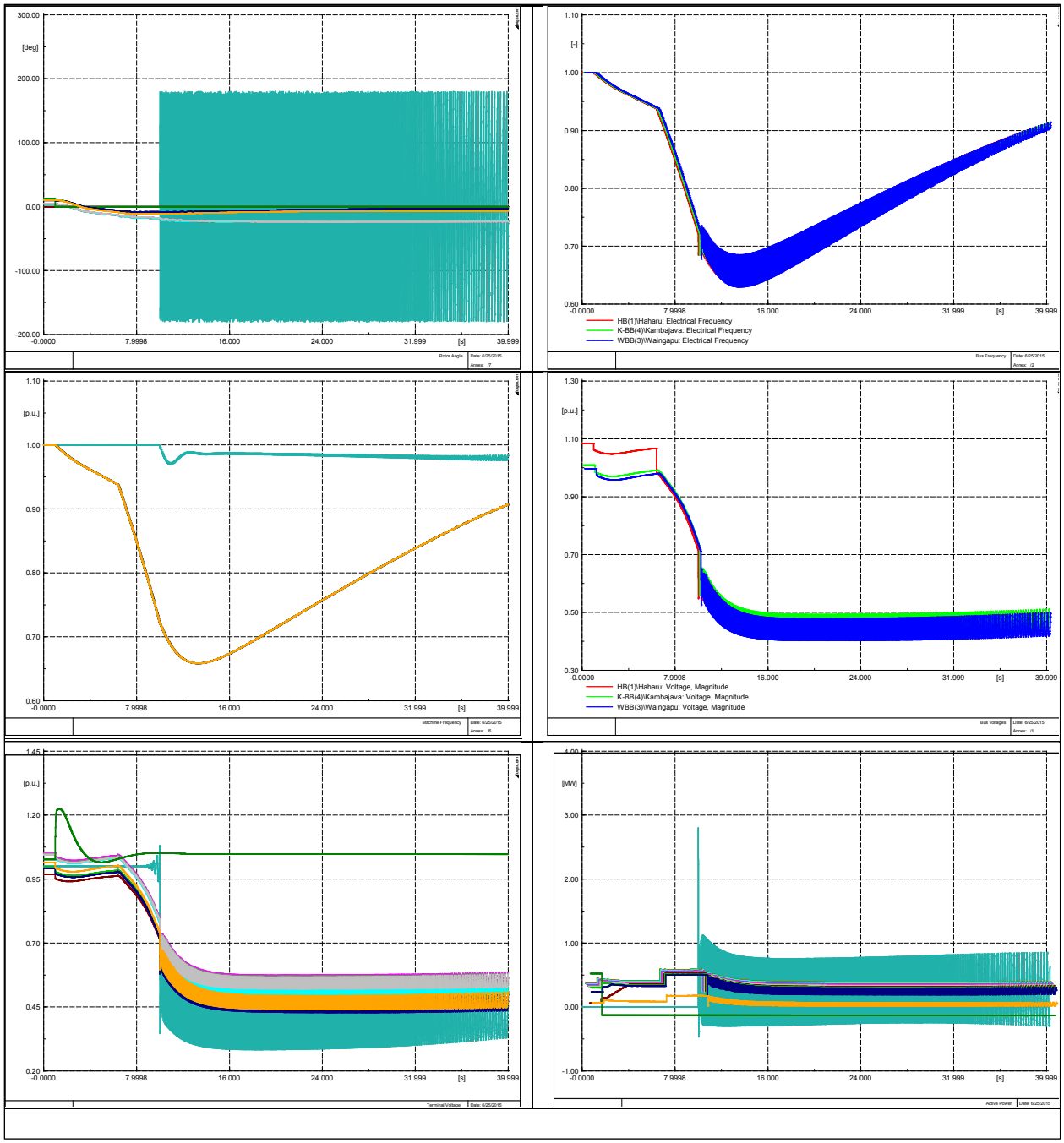

Figure G-29. High Wind High Load scenario for the Partial Generator (650 kW) Outage at Kambajawa Bus—No Self-Clearing of Fault study case. (1) Rotor angle of generators, (2) bus frequency, (3) generator frequency, (4) bus voltage, (5) terminal voltage, and (6) real power of generators

This report is available at no cost from the National Renewable Energy Laboratory (NREL) at www.nrel.gov/publications.

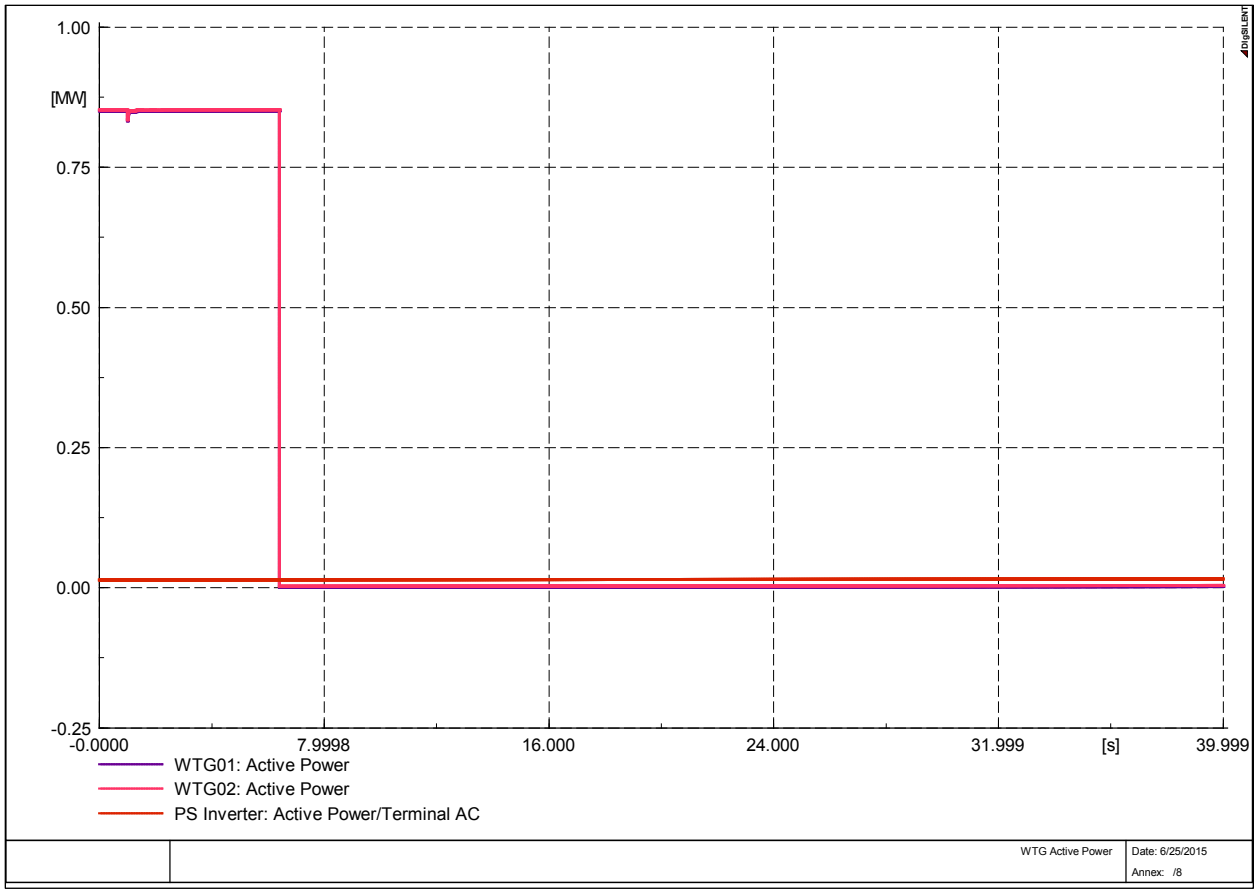

Figure G-30. Power output of two WTGs for the High Wind High Load scenario for the Partial Generator (650 kW) Outage at Kambajawa Bus—No Self-Clearing of Fault study case

OBSERVATIONS: A frequency runaway is observed because the system loses 650 kW of generation. There is not enough headroom available to compensate for this loss. Due to this, the frequency falls for 10 s by an amount large enough to cause the WTGs to disconnect. This results in a loss of 2.35 MW in the system. When the CAT32 generator starts supplying power at 10 s, the generator is not able to synchronize and the system as a whole loses synchronism.

This report is available at no cost from the National Renewable Energy Laboratory (NREL) at www.nrel.gov/publications.

High Wind Low Load

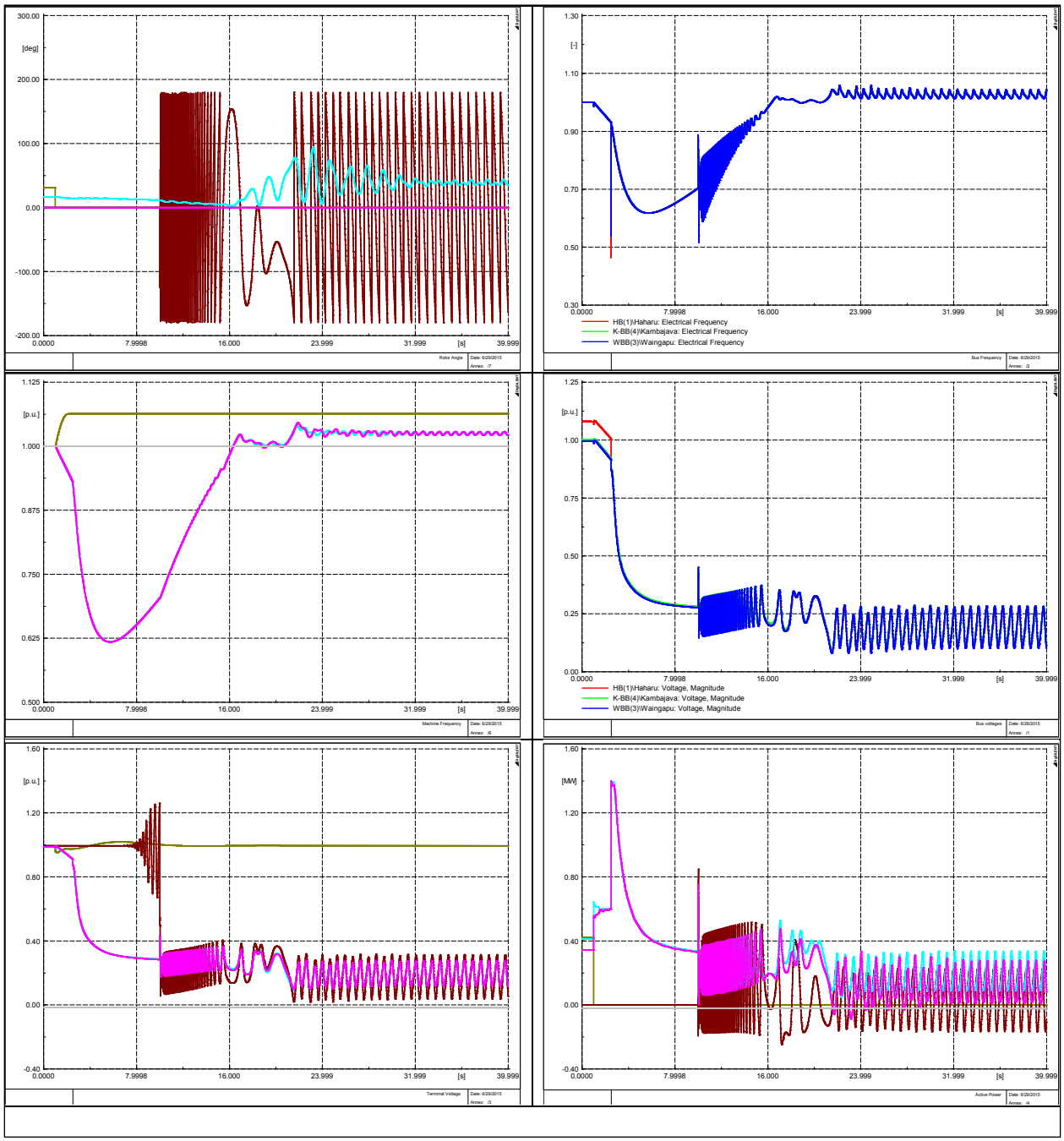

Figure G-31. High Wind Low Load scenario for the Partial Generator (420 kW) Outage at Kambajawa Bus—No Self-Clearing of Fault study case. (1) Rotor angle of generators, (2) bus frequency, (3) generator frequency, (4) bus voltage, (5) terminal voltage, and (6) real power of generators

This report is available at no cost from the National Renewable Energy Laboratory (NREL) at www.nrel.gov/publications.

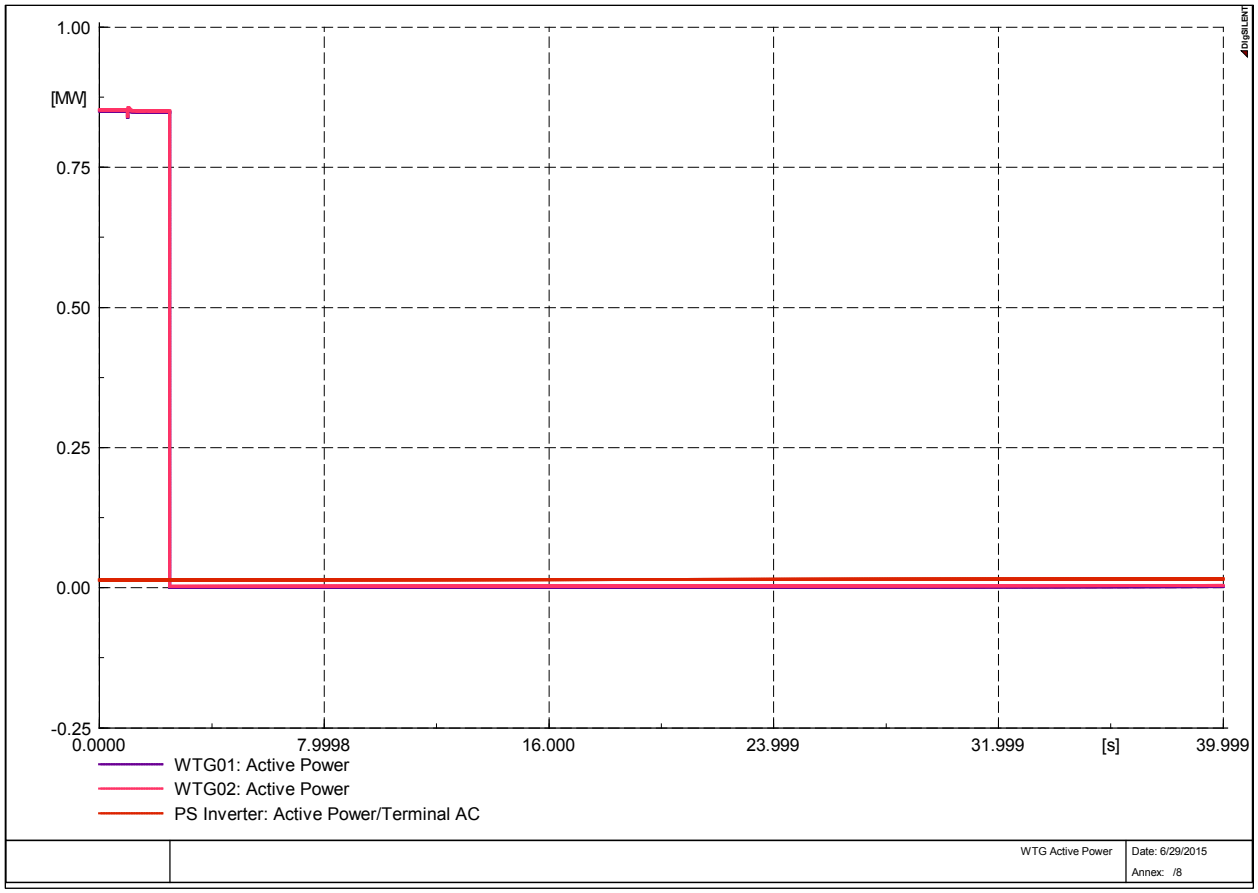

Figure G-32. Power output of two WTGs for the High Wind High Load scenario for the Partial Generator (420 kW) Outage at Kambajawa Bus—No Self-Clearing of Fault study case

OBSERVATIONS: A frequency runaway is observed because the system loses 420 kW of generation. There is not enough headroom available to compensate for this loss. Due to this, the frequency falls for 10 s by an amount large enough to cause the WTGs to disconnect. This results in a loss of 2.35 MW in the system. When the CAT32 generator starts supplying power at 10 s, the generator is not able to synchronize and the system as a whole loses synchronism.

This report is available at no cost from the National Renewable Energy Laboratory (NREL) at www.nrel.gov/publications.

High Wind High Load with PowerStore

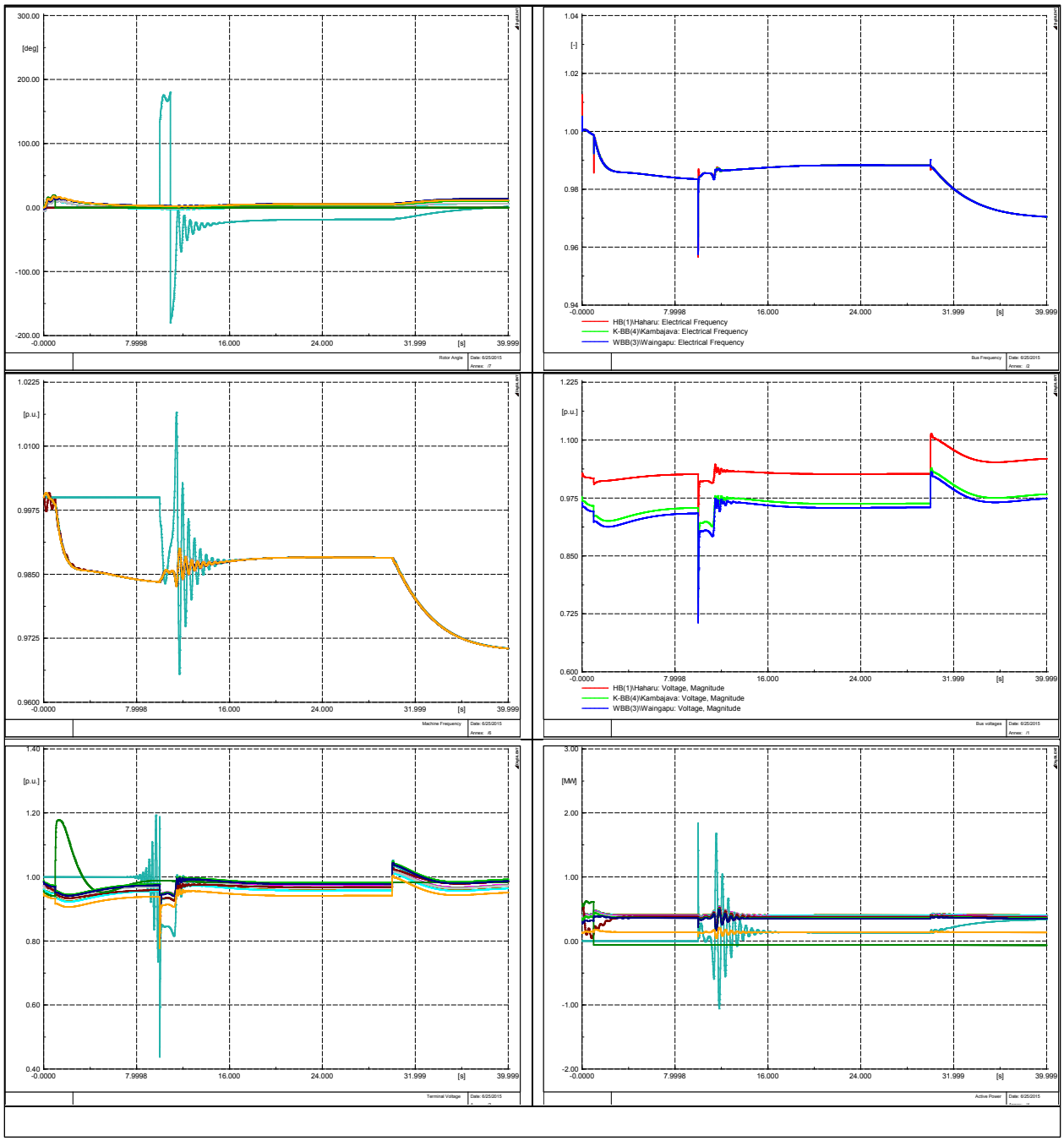

Figure G-33. High Wind High Load with PowerStore scenario for the Partial Generator (650 kW) Outage at Kambajawa Bus—No Self-Clearing of Fault study case. (1) Rotor angle of generators, (2) bus frequency, (3) generator frequency, (4) bus voltage, (5) terminal voltage, and (6) real power of generators

This report is available at no cost from the National Renewable Energy Laboratory (NREL) at www.nrel.gov/publications.

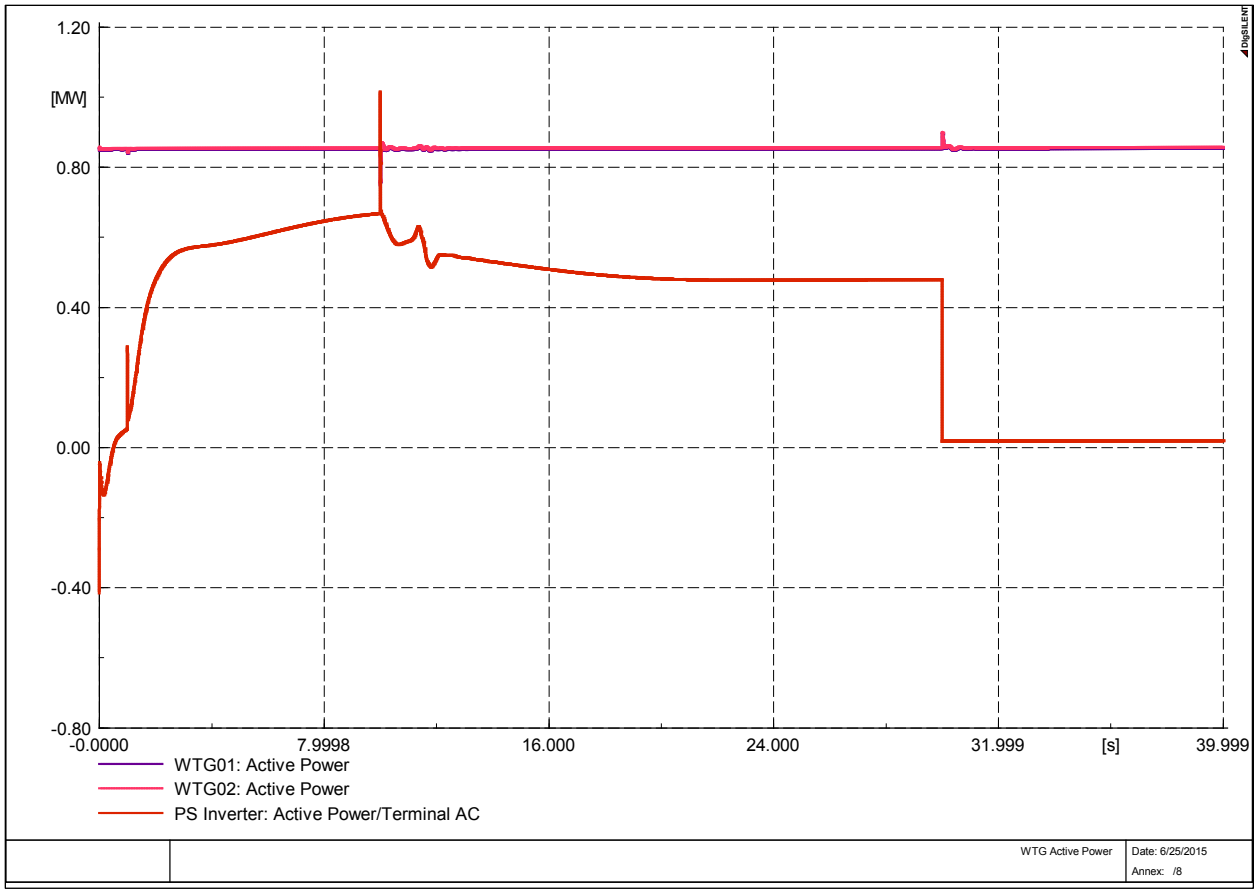

Figure G-34. Active power output of the two WTGs for the High Wind High Load with PowerStore scenario for the Partial Generator (650 kW) Outage at Kambajawa Bus—No Self-Clearing of Fault study case

OBSERVATIONS: At the fault, PowerStore starts supplying approximately 600 kW, thus stabilizing the system until the reserve generator CAT C32 starts supplying power at 10 s. At 30 s, when PowerStore shuts down, the system is still stable.

This report is available at no cost from the National Renewable Energy Laboratory (NREL) at www.nrel.gov/publications.

High Wind Low Load with PowerStore

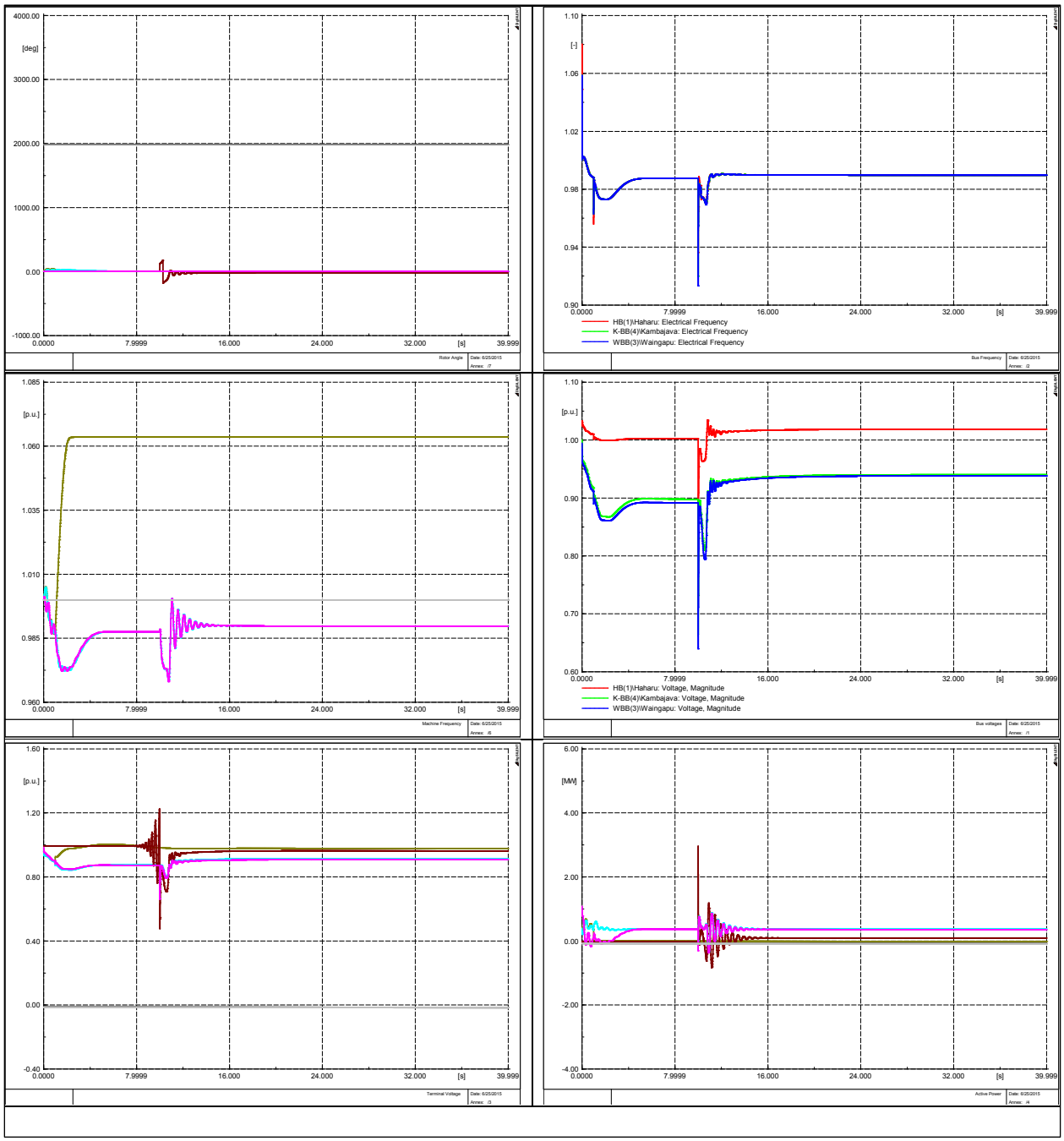

Figure G-35. High Wind Low Load with PowerStore scenario for the Partial Generator (420 kW) Outage at Kambajawa Bus—No Self-Clearing of Fault study case. (1) Rotor angle of generators, (2) bus frequency, (3) generator frequency, (4) bus voltage, (5) terminal voltage, and (6) real power of generators

This report is available at no cost from the National Renewable Energy Laboratory (NREL) at www.nrel.gov/publications.

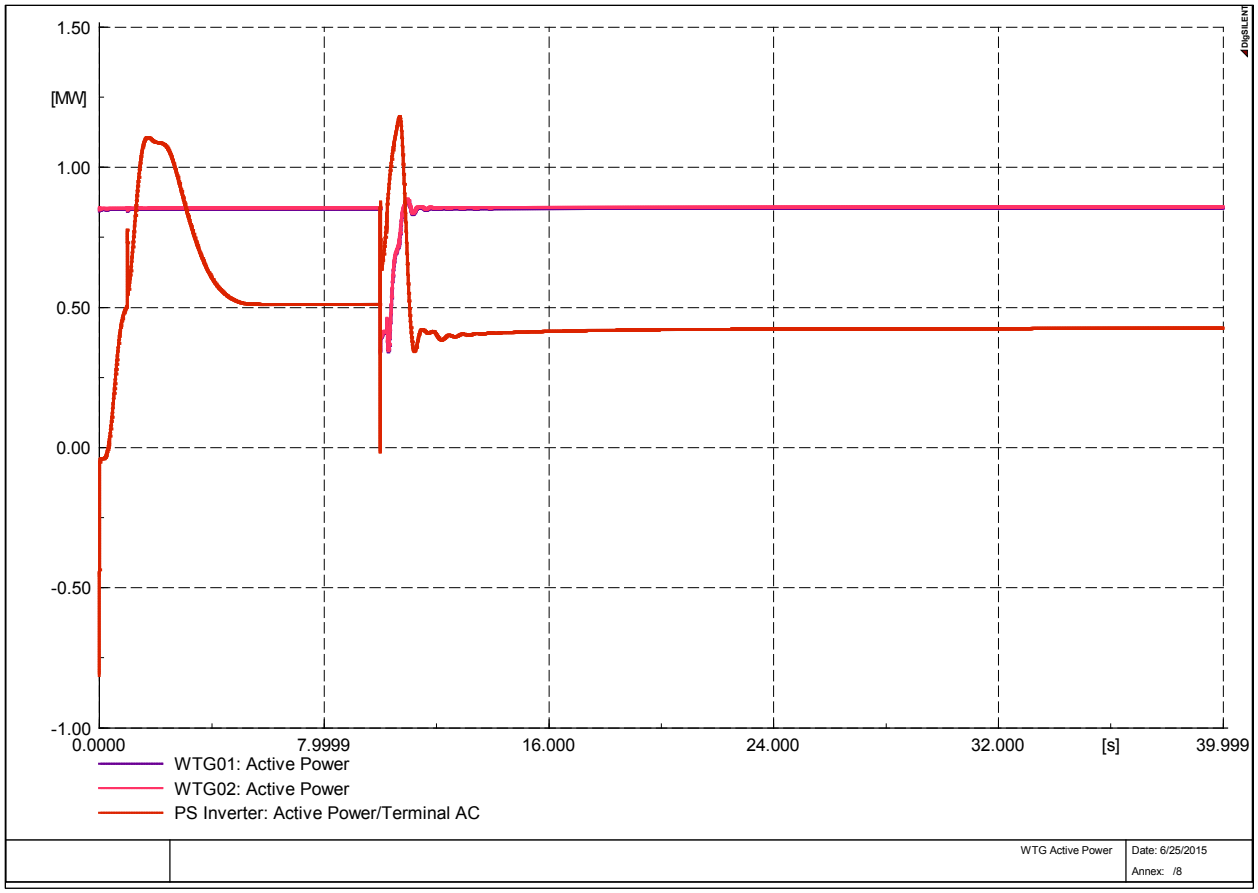

Figure G-36. Active power output of the two WTGs for the High Wind Low Load with PowerStore scenario for the Partial Generator (420 kW) Outage at Kambajawa Bus—No Self-Clearing of Fault study case

OBSERVATIONS: At the fault, PowerStore starts supplying approximately 500 kW, thus stabilizing the system until the reserve generator CAT32 starts supplying power at 10 s. There is enough power generation available in the system to compensate for this loss.

This report is available at no cost from the National Renewable Energy Laboratory (NREL) at www.nrel.gov/publications.

Total Load Loss at Kambajawa Bus

In this study case, the loss of the total load at the Kambajawa Bus is analyzed. The fault occurs at 1 s, and there is no self-clearing.

High Wind High Load

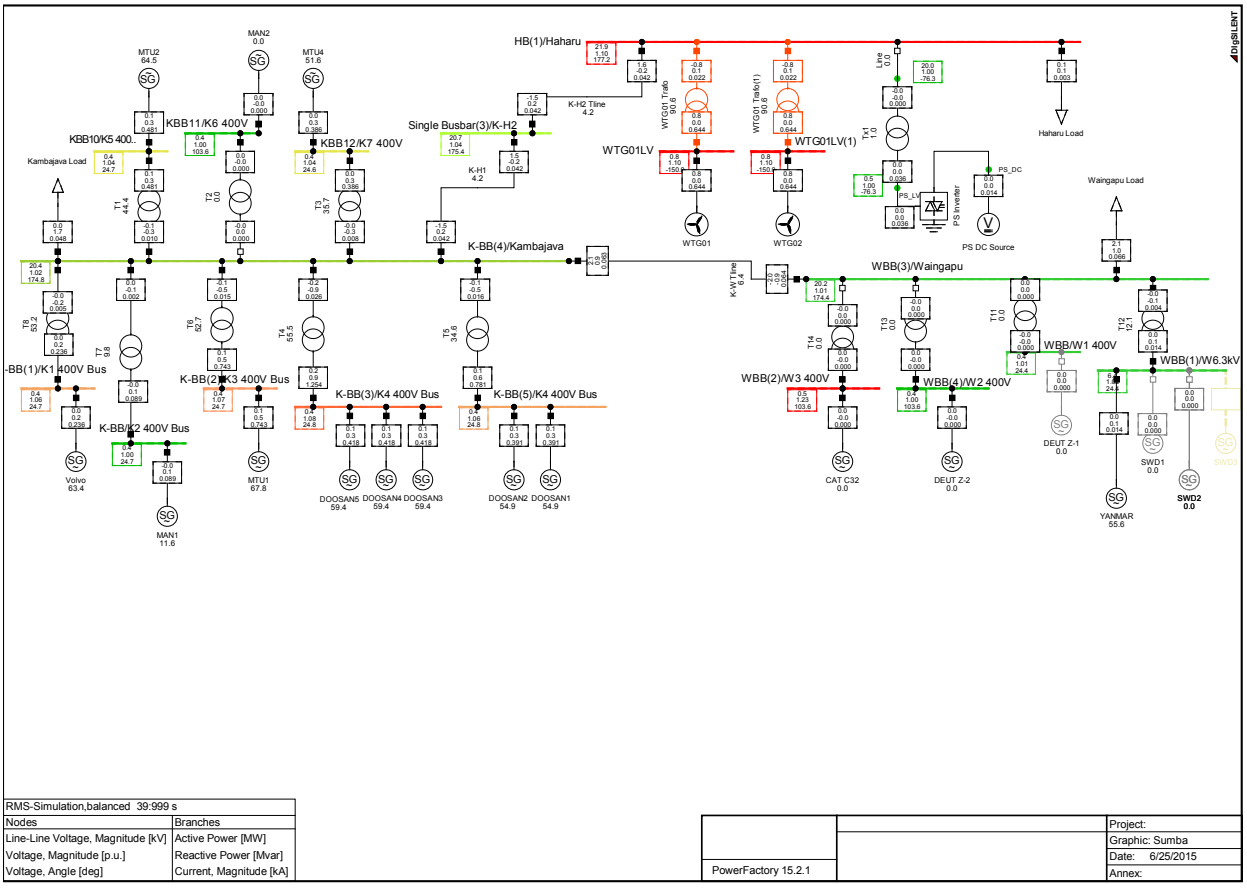

Figure G-37. Schematic layout for the High Wind High Load scenario for the Total Load Loss at Kambajawa Bus—No Self-Clearing of Fault study case

This report is available at no cost from the National Renewable Energy Laboratory (NREL) at www.nrel.gov/publications.

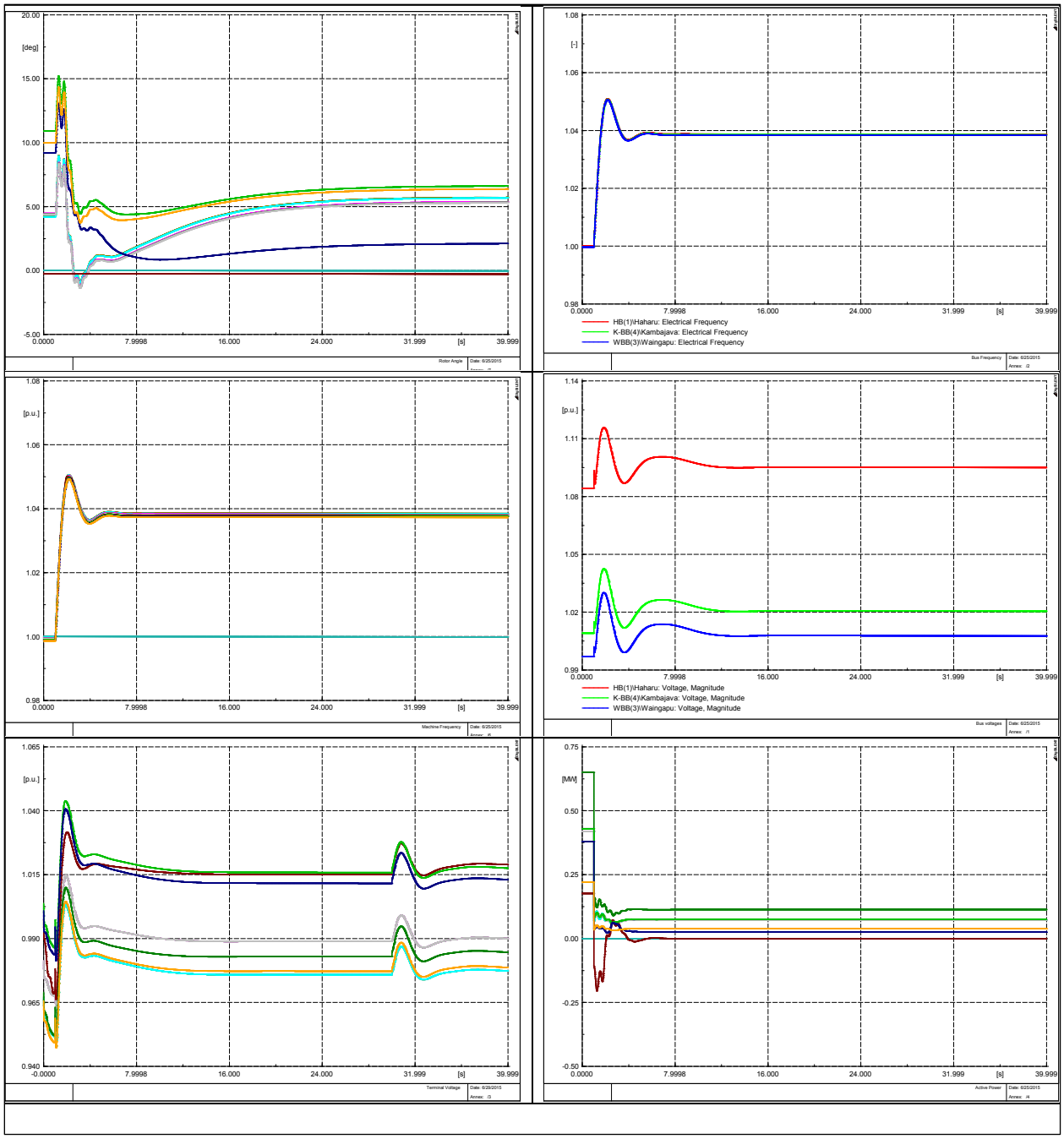

Figure G-38. High Wind High Load scenario for the Total Load Loss at Kambajawa Bus—No Self-Clearing of Fault study case. (1) Rotor angle of generators, (2) bus frequency, (3) generator frequency, (4) bus voltage, (5) terminal voltage, and (6) real power of generators

This report is available at no cost from the National Renewable Energy Laboratory (NREL) at www.nrel.gov/publications.

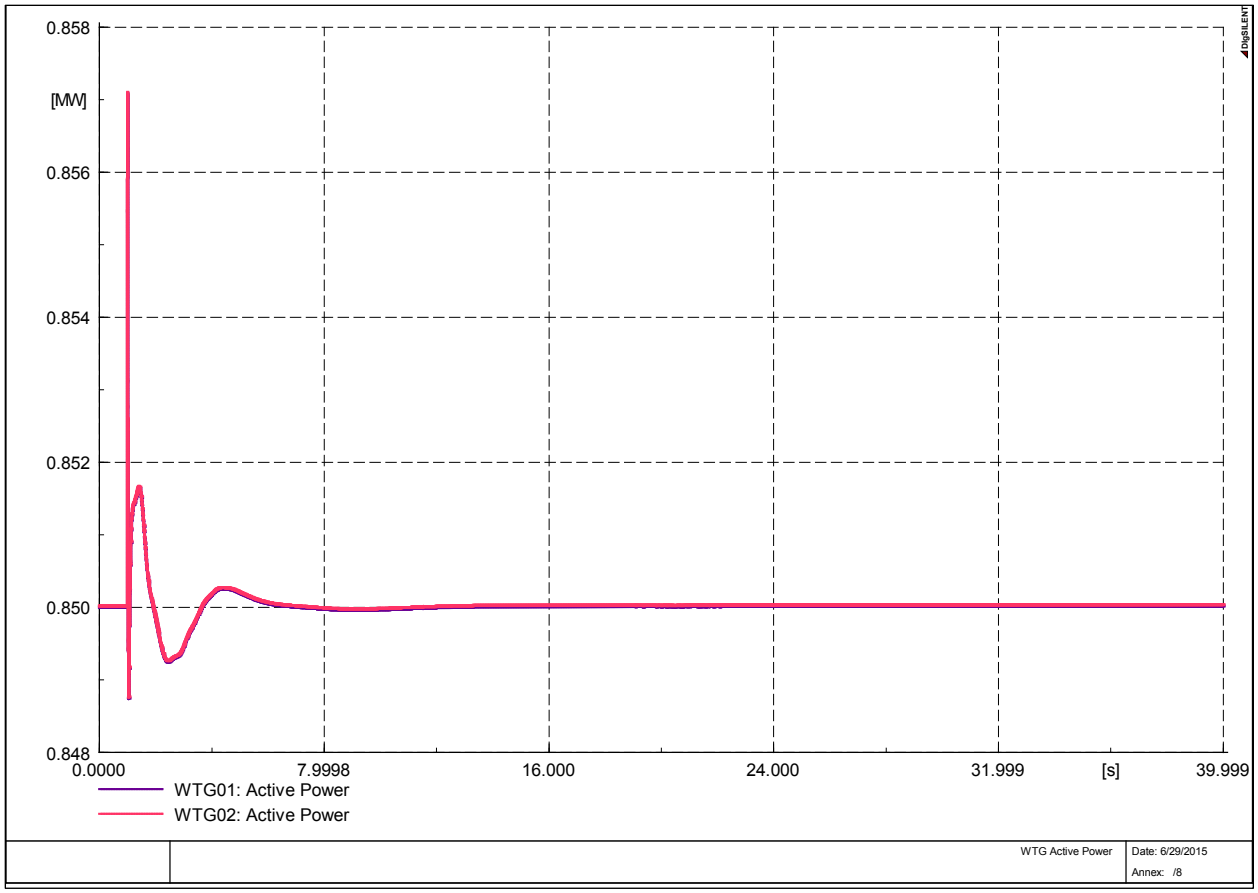

Figure G-39. Active power output of the two WTGs for the High Wind High Load scenario for the Total Load Loss at Kambajawa Bus—No Self-Clearing of Fault study case

OBSERVATIONS: In this study case, a load of 3.494 MW is lost at 1 s at Kambajawa Bus. The bus frequency increases to 1.04 p.u. and the bus voltages by 0.02 p.u., but overall the system is stable. As shown, the generators reduce their generation by 60%–70% of their initial value. In reality, the diesel generator sets would be disconnected to attain stability.

This report is available at no cost from the National Renewable Energy Laboratory (NREL) at www.nrel.gov/publications.

High Wind Low Load

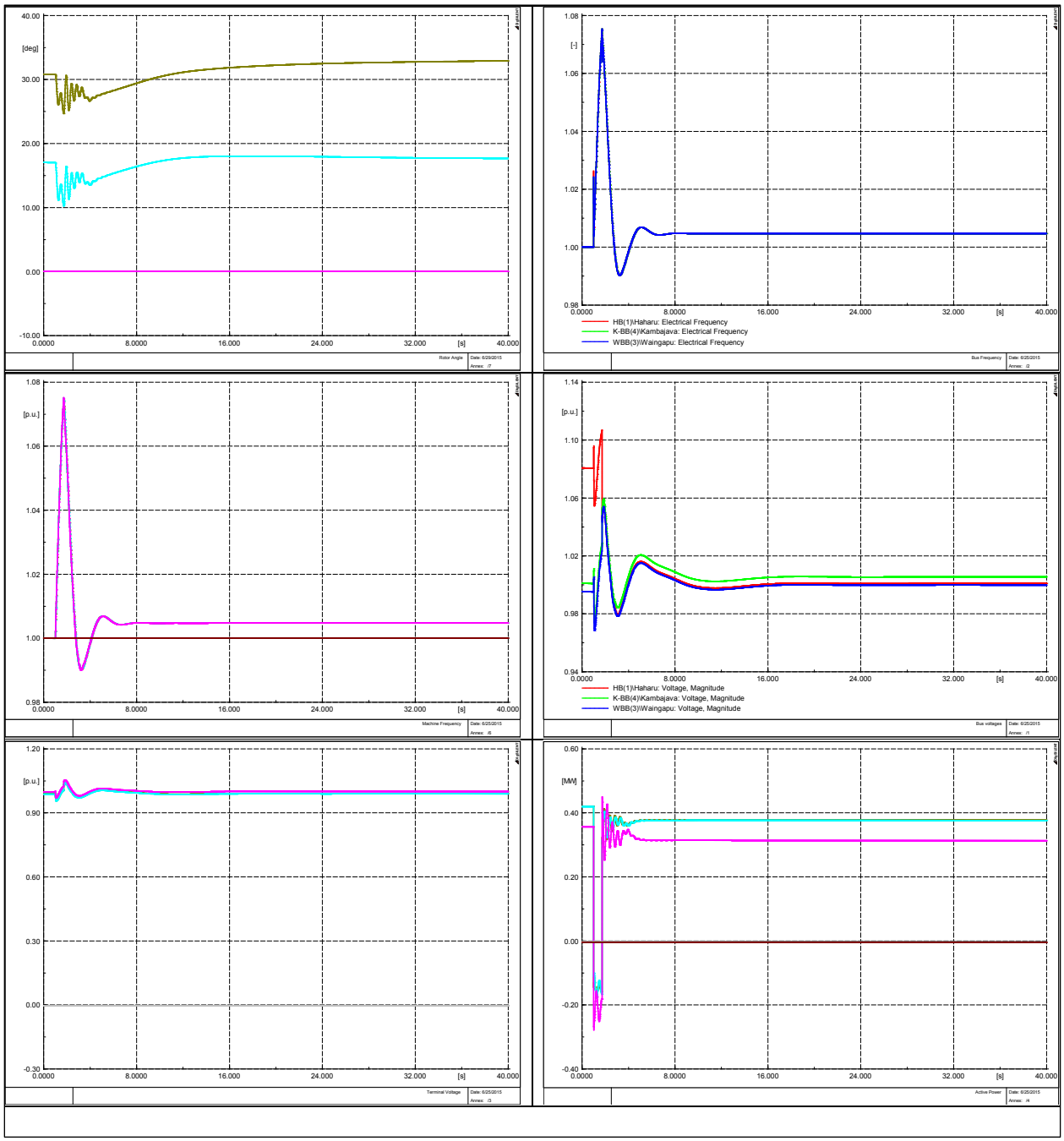

Figure G-40. High Wind Low Load scenario for the Total Load Loss at Kambajawa Bus—No Self-Clearing of Fault study case. (1) Rotor angle of generators, (2) bus frequency, (3) generator frequency, (4) bus voltage, (5) terminal voltage, and (6) real power of generators

This report is available at no cost from the National Renewable Energy Laboratory (NREL) at www.nrel.gov/publications.

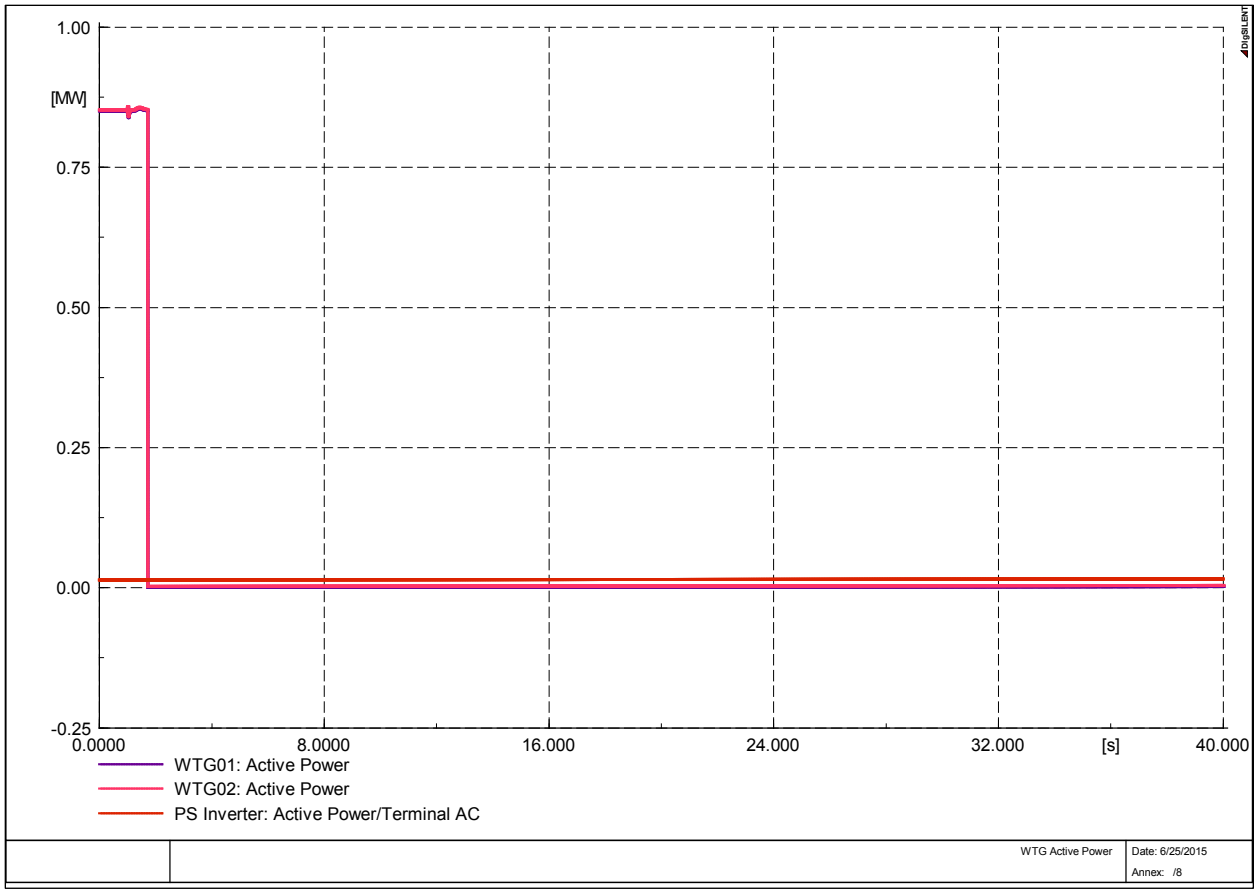

Figure G-41. Active power output of the two WTGs for the High Wind High Load scenario for the Total Load Loss at Kambajawa Bus—No Self-Clearing of Fault study case

OBSERVATIONS: In this study case, a load of 1.691 MW is lost at 1 s at Kambajawa Bus. The bus frequency and bus voltages increase by a very small value, but overall the system is stable. As shown, the generators reduce their generation and reach a negative value. In reality, the diesel generator sets would be disconnected to attain stability.

This report is available at no cost from the National Renewable Energy Laboratory (NREL) at www.nrel.gov/publications.

High Wind High Load with PowerStore

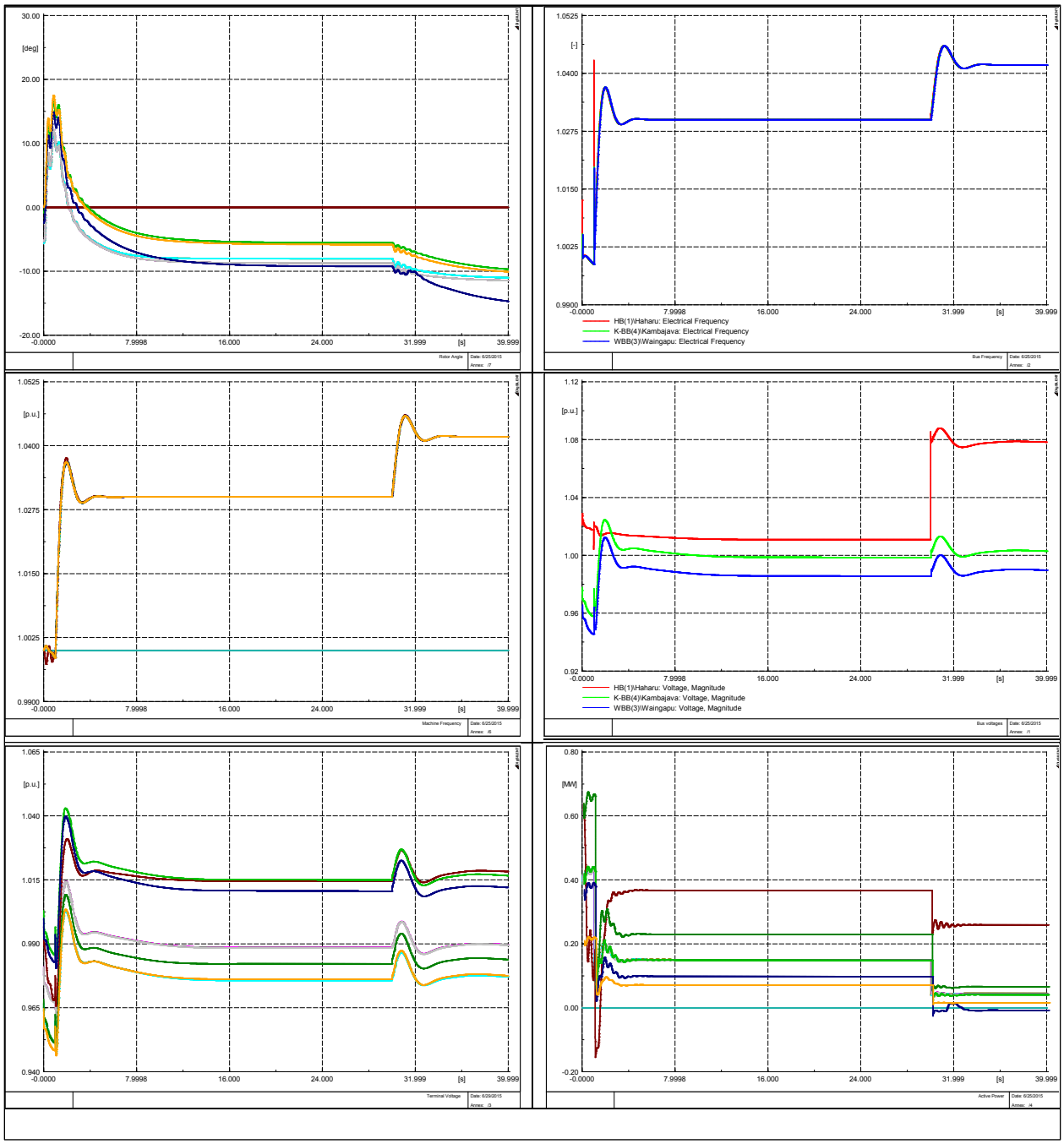

Figure G-42. High Wind High Load with PowerStore scenario for the Total Load Loss at Kambajawa Bus—No Self-Clearing of Fault study case. (1) Rotor angle of generators, (2) bus frequency, (3) generator frequency, (4) bus voltage, (5) terminal voltage, and (6) real power of generators

This report is available at no cost from the National Renewable Energy Laboratory (NREL) at www.nrel.gov/publications.

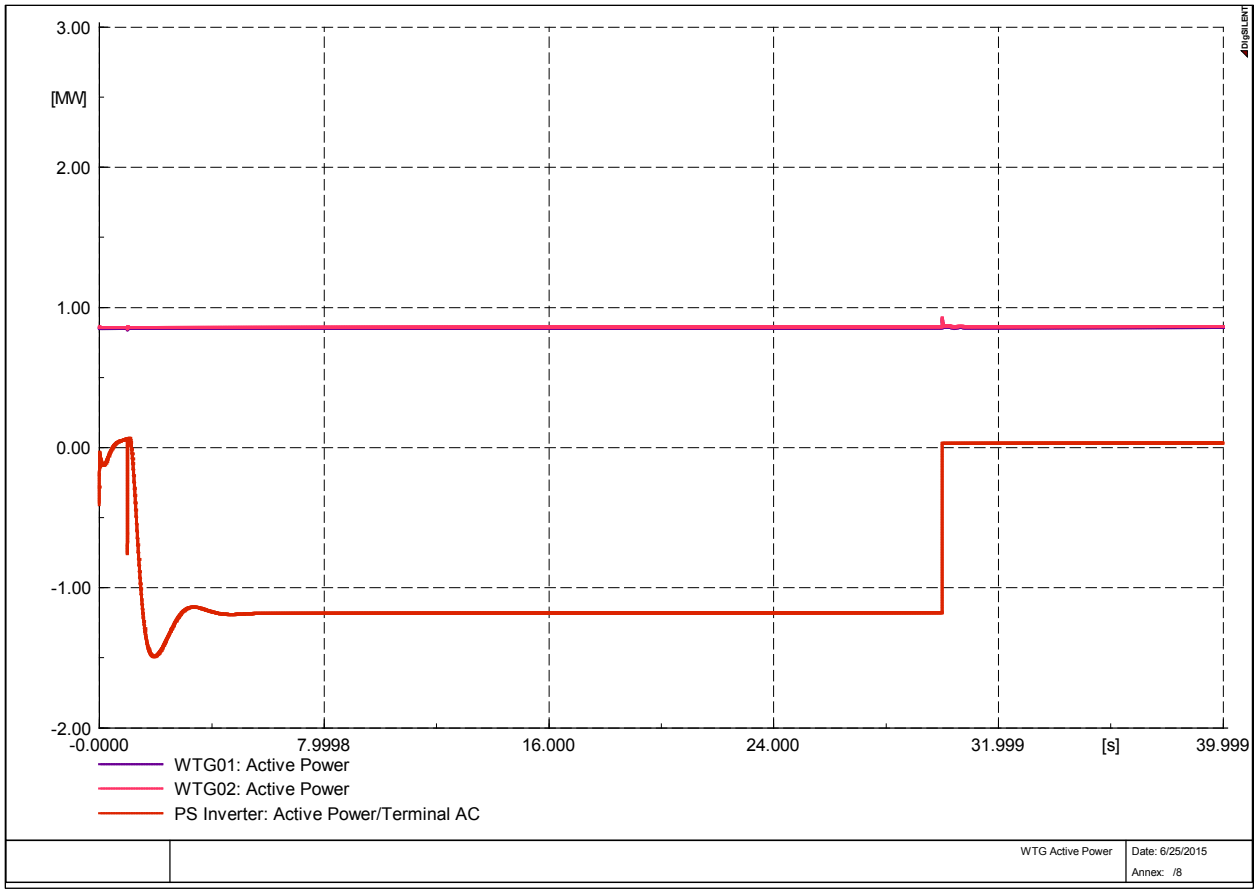

Figure G-43. Active power output of the two WTGs for the High Wind High Load with PowerStore scenario for the Total Load Loss at Kambajawa Bus—No Self-Clearing of Fault study case

OBSERVATIONS: In this study case, a load of 3.494 MW is lost at 1 s at Kambajawa Bus. The bus frequency increases to 1.04 p.u., but overall the system is stable. Because there is PowerStore in the system, it starts absorbing at 1 s. As shown, the generators reduce their generation by 60%–70% of their initial value when the PowerStore shuts down at 30 s. In reality, the diesel generator sets would be disconnected to attain stability.

This report is available at no cost from the National Renewable Energy Laboratory (NREL) at www.nrel.gov/publications.

High Wind Low Load with PowerStore

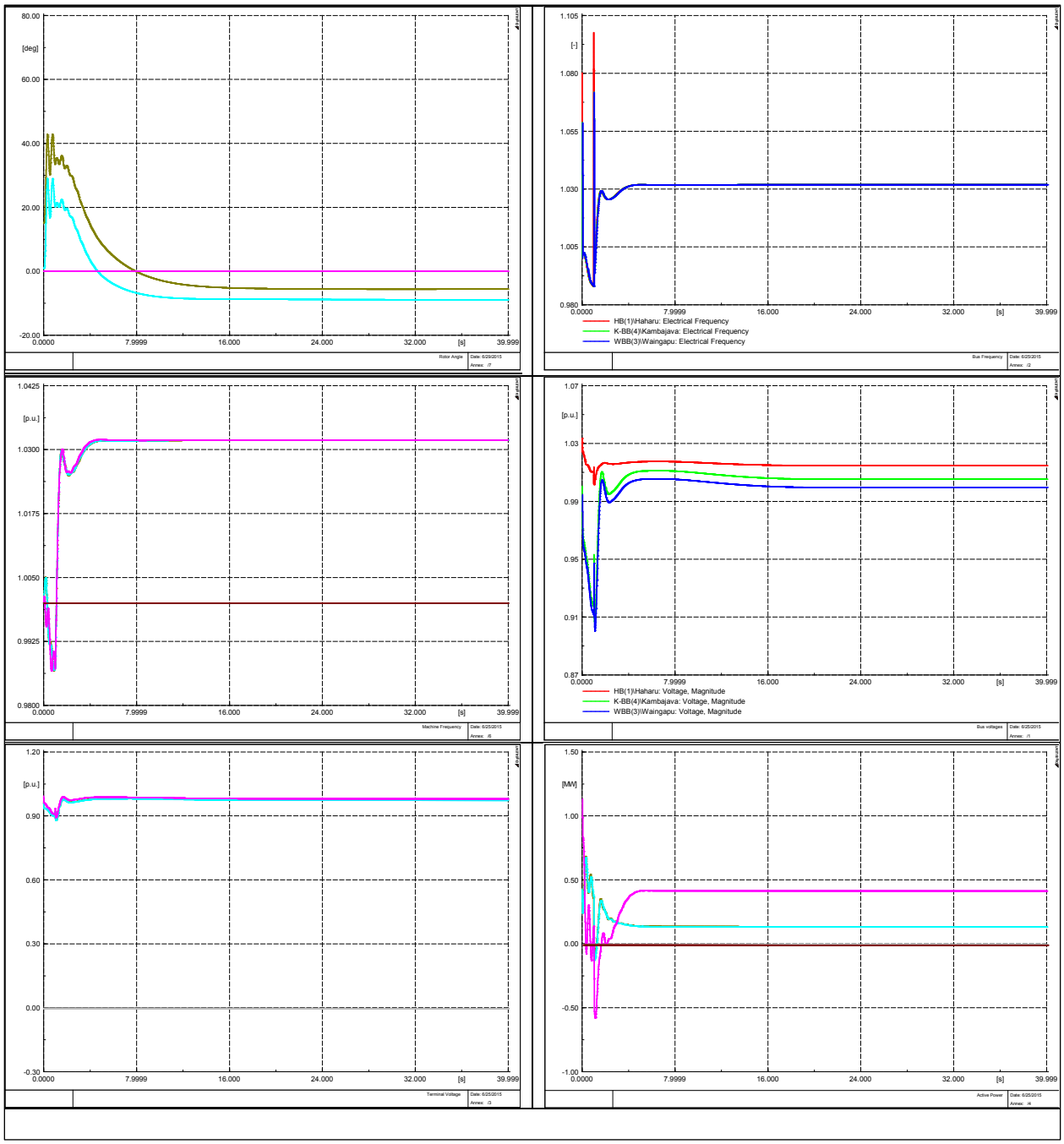

Figure G-44. High Wind Low Load with PowerStore scenario for the Total Load Loss at Kambajawa Bus—No Self-Clearing of Fault study case. (1) Rotor angle of generators, (2) bus frequency, (3) generator frequency, (4) bus voltage, (5) terminal voltage, and (6) real power of generators

This report is available at no cost from the National Renewable Energy Laboratory (NREL) at www.nrel.gov/publications.

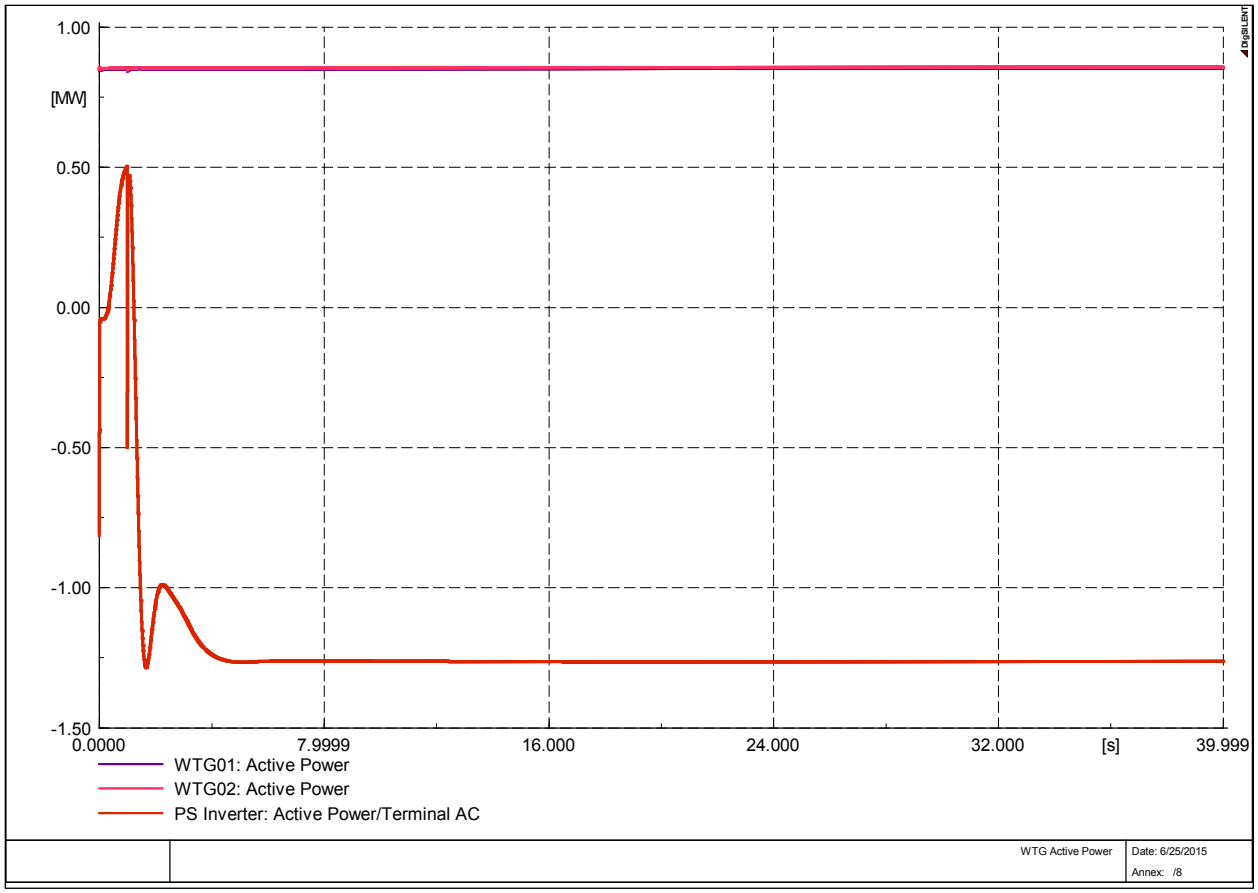

Figure G-45. Active power output of the two WTGs for the High Wind Low Load with PowerStore scenario for the Total Load Loss at Kambajawa Bus—No Self-Clearing of Fault study case

OBSERVATIONS: In this study case, a load of 1.691 MW is lost at 1 s at Kambajawa Bus. The bus frequency and bus voltages increase by a very small value, but overall the system is stable. PowerStore in the system starts absorbing at 1 s. In reality, the diesel generator sets would be disconnected to attain stability.

This report is available at no cost from the National Renewable Energy Laboratory (NREL) at www.nrel.gov/publications.

Kambajawa-Haharu Transmission Line Fault—Self-Clearing of Fault

In this study case, a three-phase short circuit in the transmission line between Kambajawa and Haharu is analyzed. The fault occurs at 1 s, and it self-clears in 180 ms. The four scenarios for this case are presented below.

High Wind High Load

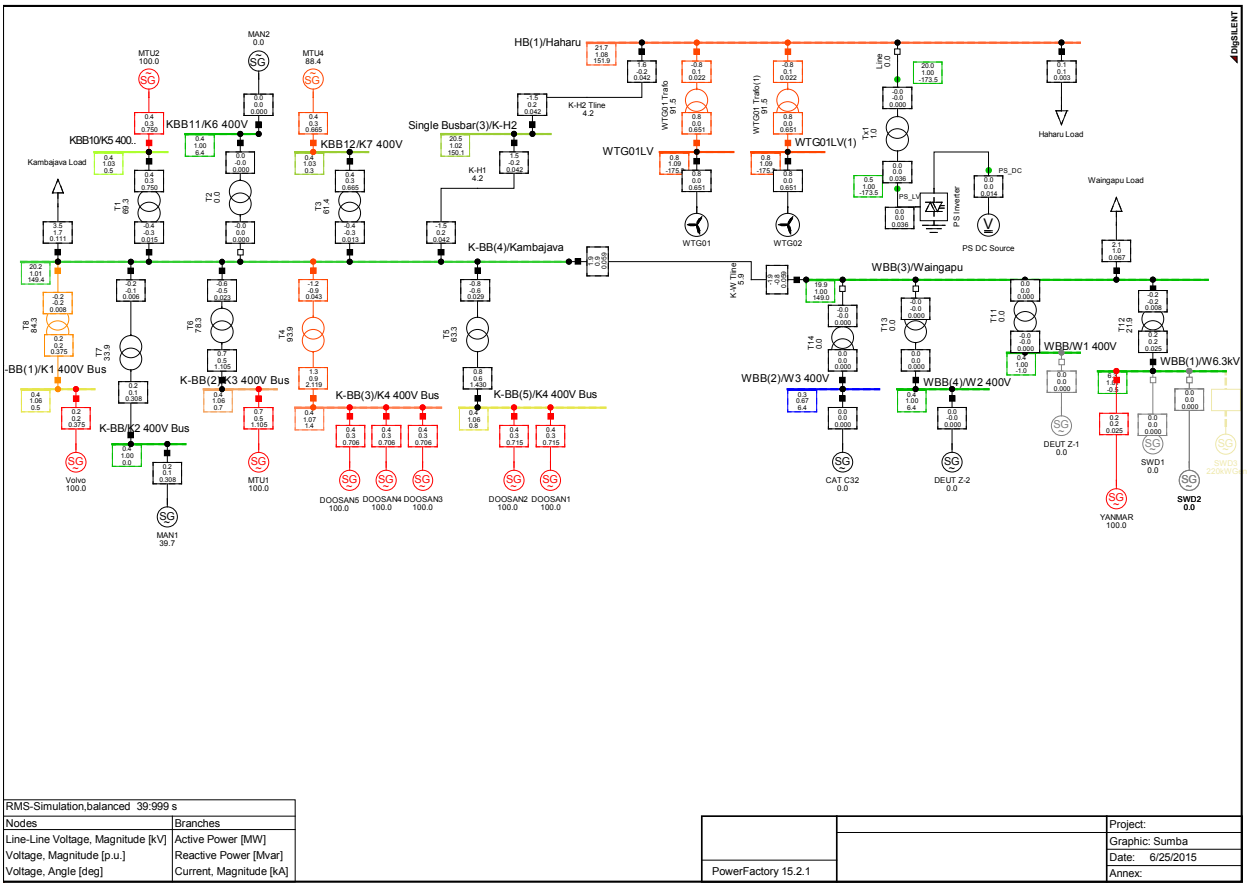

Figure G-46. Schematic layout for High Wind High Load scenario for the Kambajawa-Haharu Transmission Line Fault—Self-Clearing of Fault study case

This report is available at no cost from the National Renewable Energy Laboratory (NREL) at www.nrel.gov/publications.

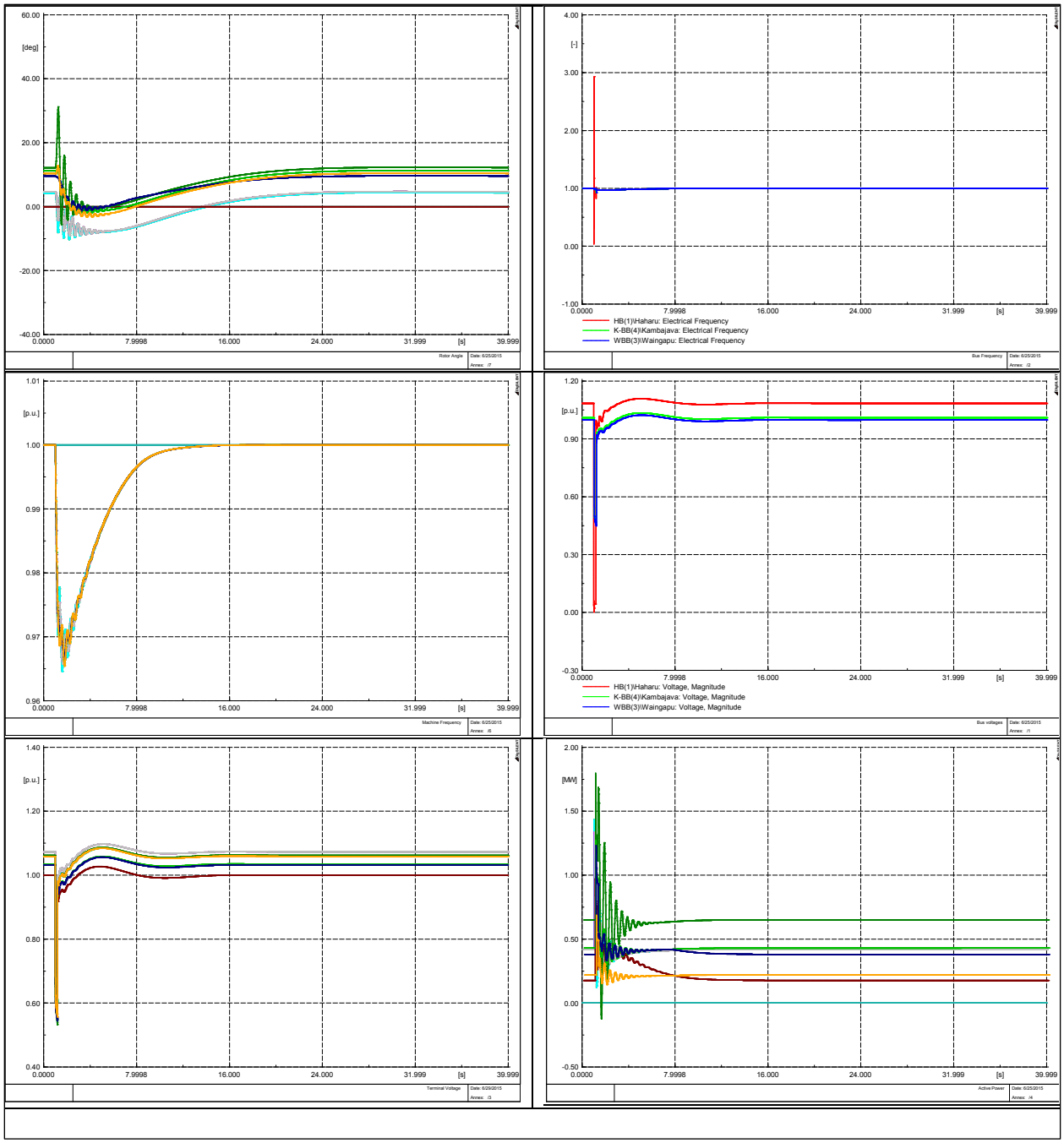

Figure G-47. High Wind High Load scenario for the Kambajawa-Haharu Transmission Line Fault—Self-Clearing of Fault study case. (1) Rotor angle of generators, (2) bus frequency, (3) generator frequency, (4) bus voltage, (5) terminal voltage, and (6) real power of generators

This report is available at no cost from the National Renewable Energy Laboratory (NREL) at www.nrel.gov/publications.

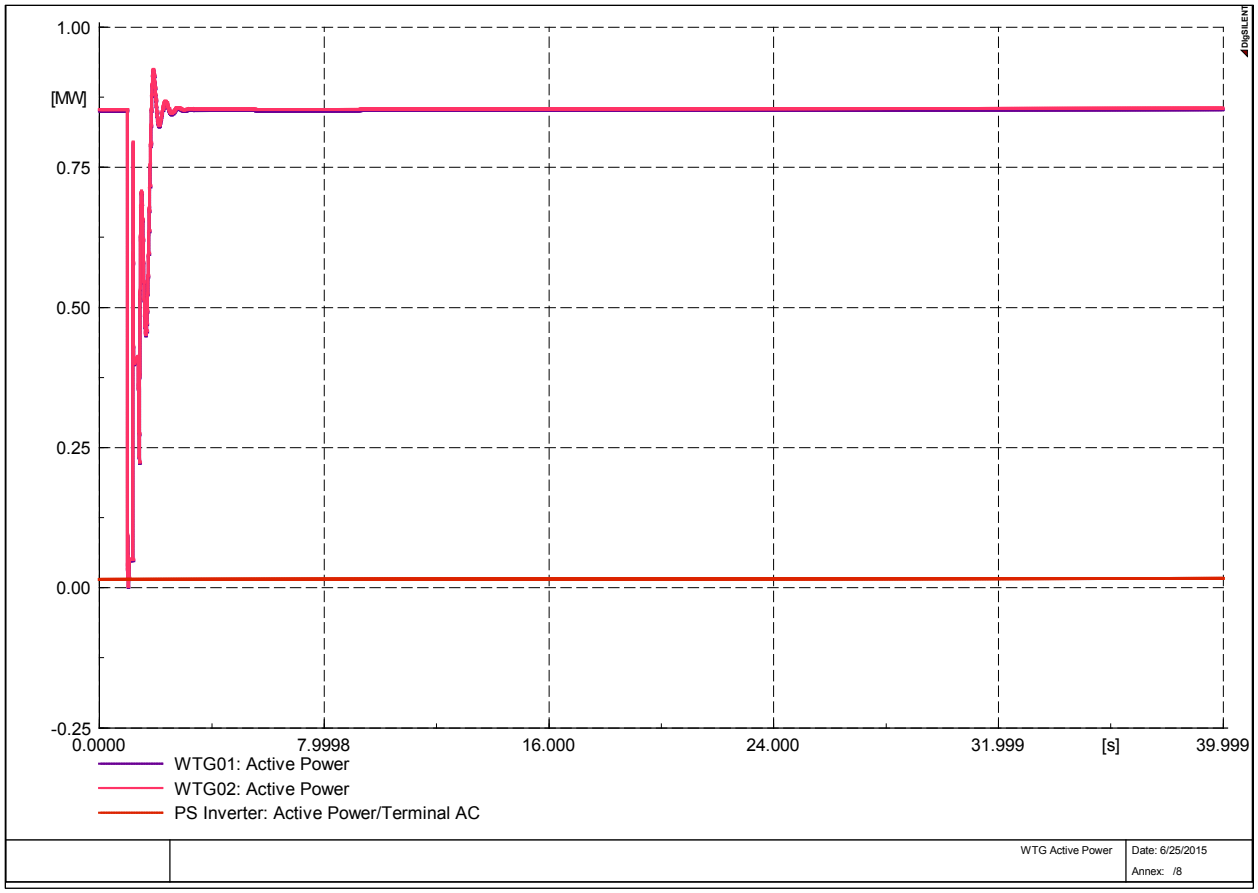

Figure G-48. Active power output of the two WTGs for the High Wind High Load scenario for the Kambajawa-Haharu Transmission Line Fault—Self-Clearing of Fault study case

OBSERVATIONS: Islanding of Haharu occurs, and the Haharu load goes offline for 180 ms. After the fault clears, the system is stable—line loadings, voltages, and frequency are within limits. The low-voltage ride-through capability of the WTGs prevents them from going offline, and they recover to normal operation quickly after the fault clears.

This report is available at no cost from the National Renewable Energy Laboratory (NREL) at www.nrel.gov/publications.

High Wind Low Load

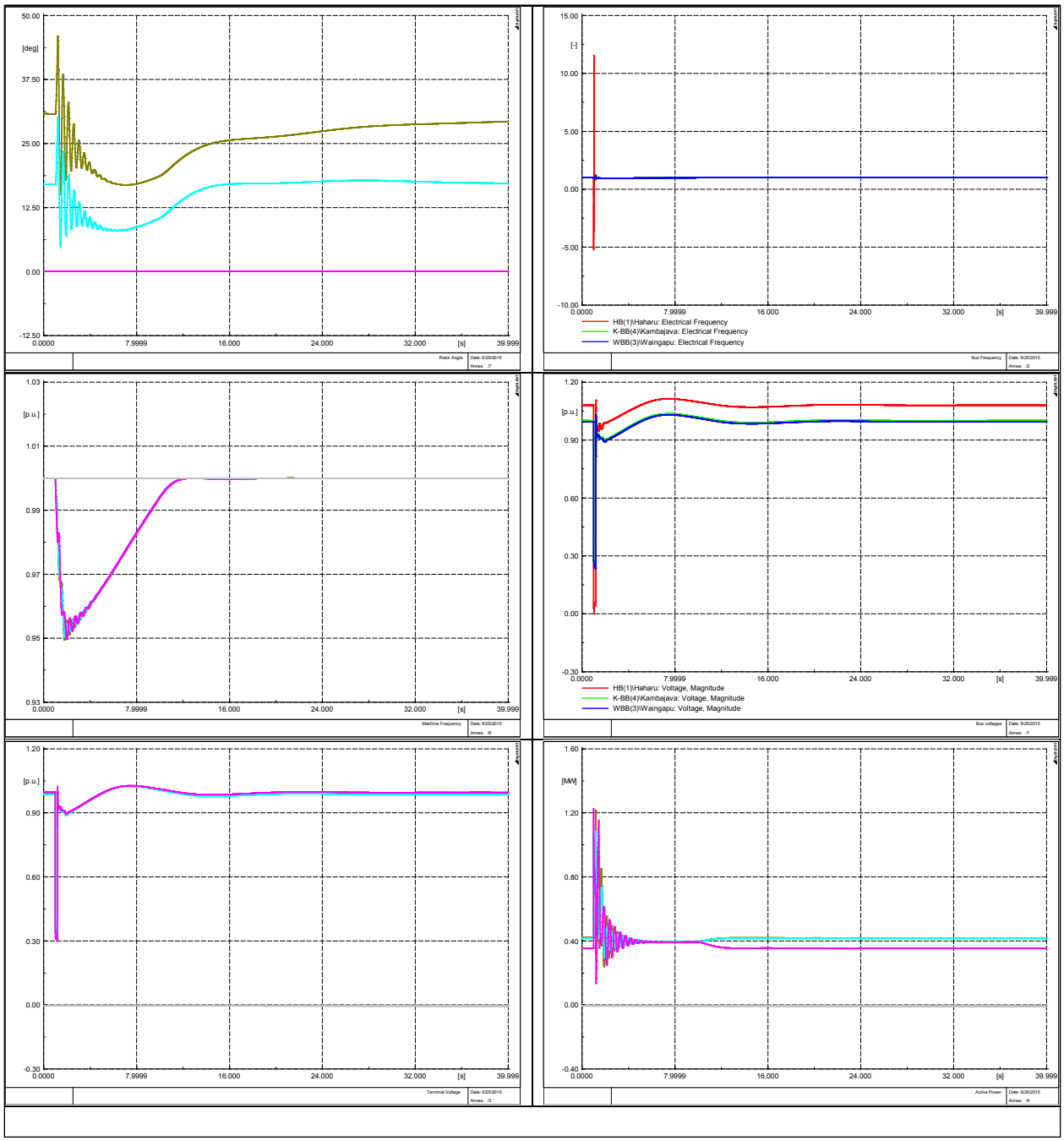

Figure G-49. High Wind Low Load scenario for the Kambajawa-Haharu Transmission Line Fault—Self-Clearing of Fault study case. (1) Rotor angle of generators, (2) bus frequency, (3) generator frequency, (4) bus voltage, (5) terminal voltage, and (6) real power of generators

This report is available at no cost from the National Renewable Energy Laboratory (NREL) at www.nrel.gov/publications.

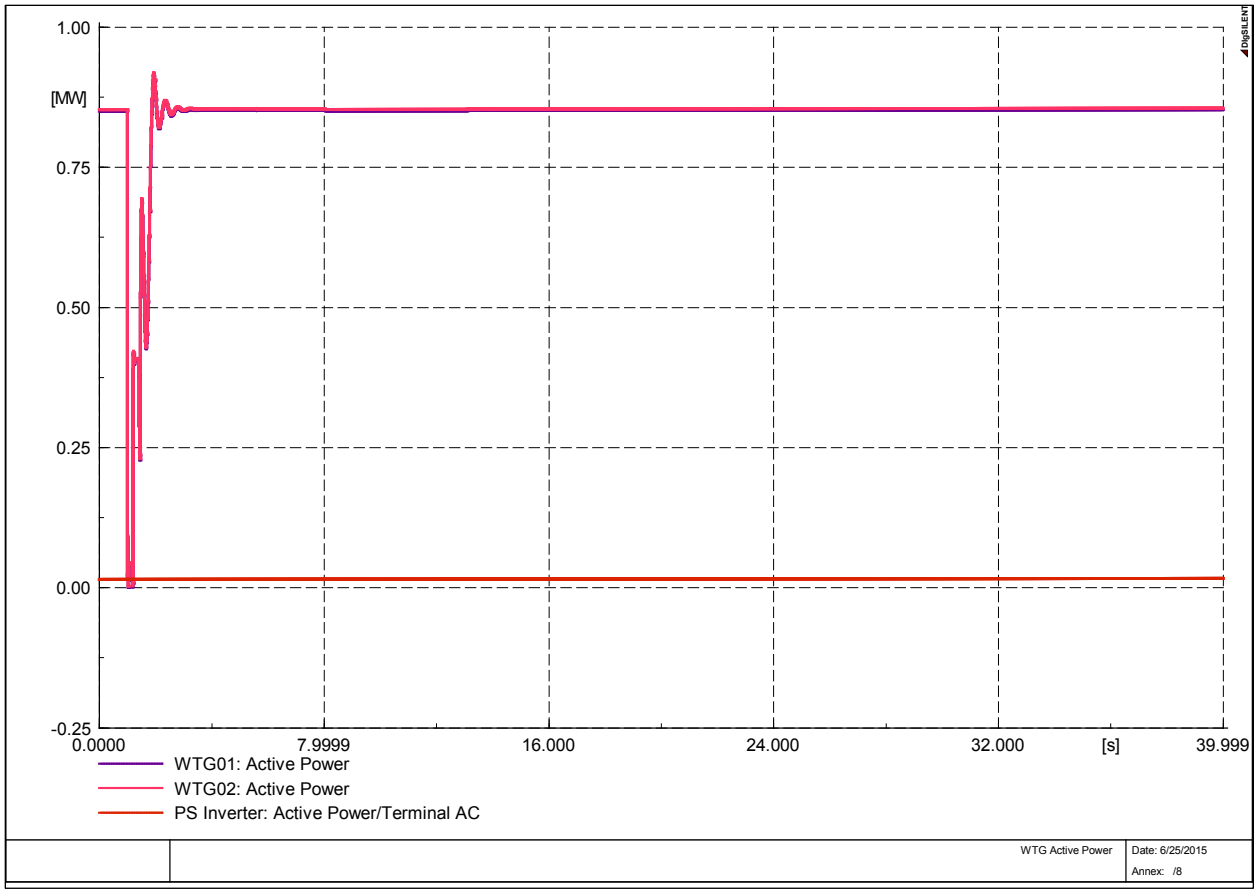

Figure G-50. Active power output of the two WTGs for the High Wind High Load scenario for the Kambajawa-Haharu Transmission Line Fault—Self-Clearing of Fault study case

OBSERVATIONS: Islanding of Haharu occurs, and the Haharu load goes offline for 180 ms. After the fault clears, the system is stable—line loadings, voltages, and frequency are within limits. The low-voltage ride-through capability of the WTGs prevents them from going offline, and they recover to normal operation quickly after the fault clears.

This report is available at no cost from the National Renewable Energy Laboratory (NREL) at www.nrel.gov/publications.

High Wind High Load with PowerStore

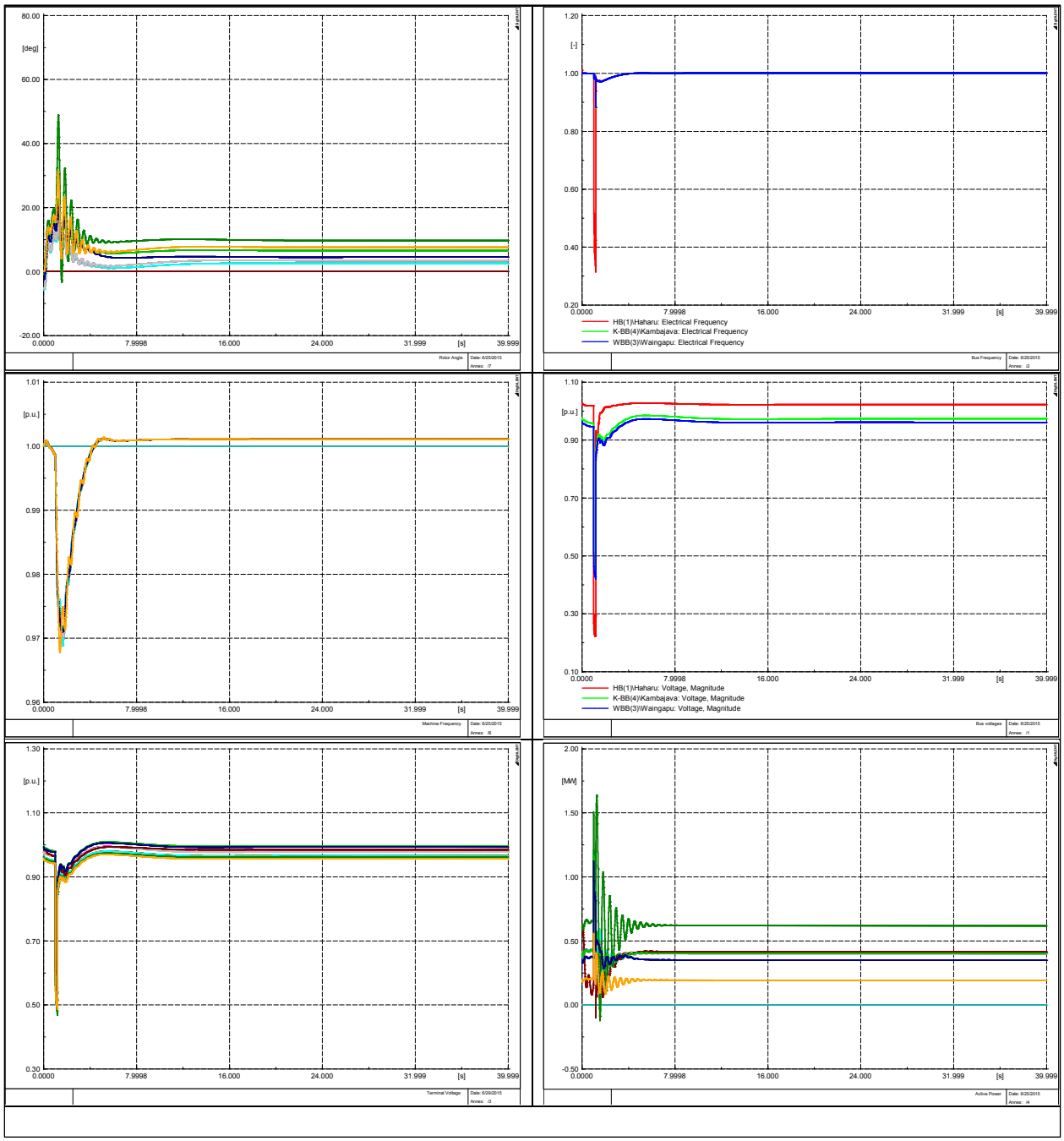

Figure G-51. High Wind High Load with PowerStore scenario for the Kambajawa-Haharu Transmission Line Fault—Self-Clearing of Fault study case. (1) Rotor angle of generators, (2) bus frequency, (3) generator frequency, (4) bus voltage, (5) terminal voltage, and (6) real power of generators

This report is available at no cost from the National Renewable Energy Laboratory (NREL) at www.nrel.gov/publications.

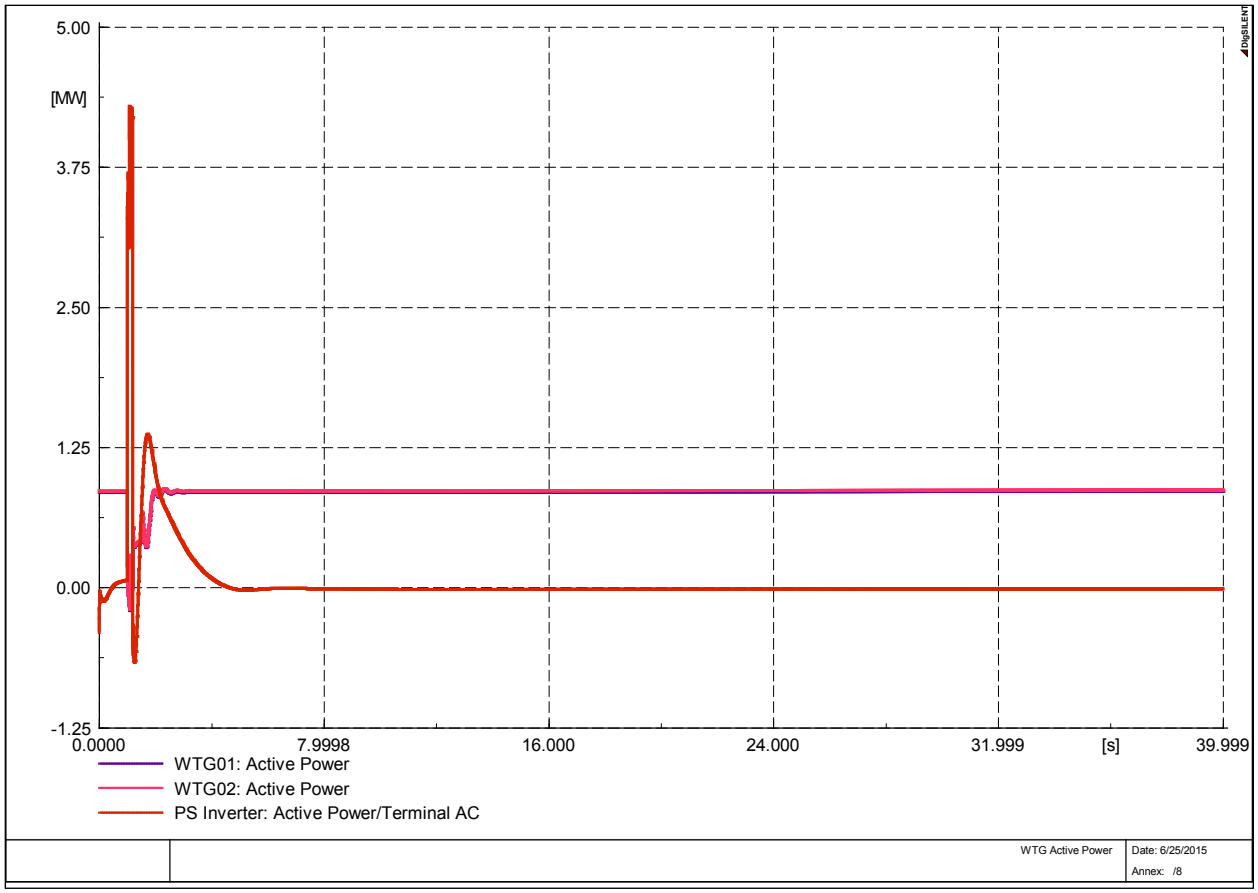

Figure G-52. Active power output of the two WTGs for the High Wind High Load with PowerStore scenario for the Kambajawa-Haharu Transmission Line Fault—Self-Clearing of Fault study case

OBSERVATIONS: Islanding of Haharu occurs, and the Haharu load goes offline for 180 ms. After the fault clears, the system is stable—line loadings, voltages, and frequency are within limits. PowerStore supplies power as the WTGs recover from the low-voltage ride-through.

This report is available at no cost from the National Renewable Energy Laboratory (NREL) at www.nrel.gov/publications.

High Wind Low Load with PowerStore

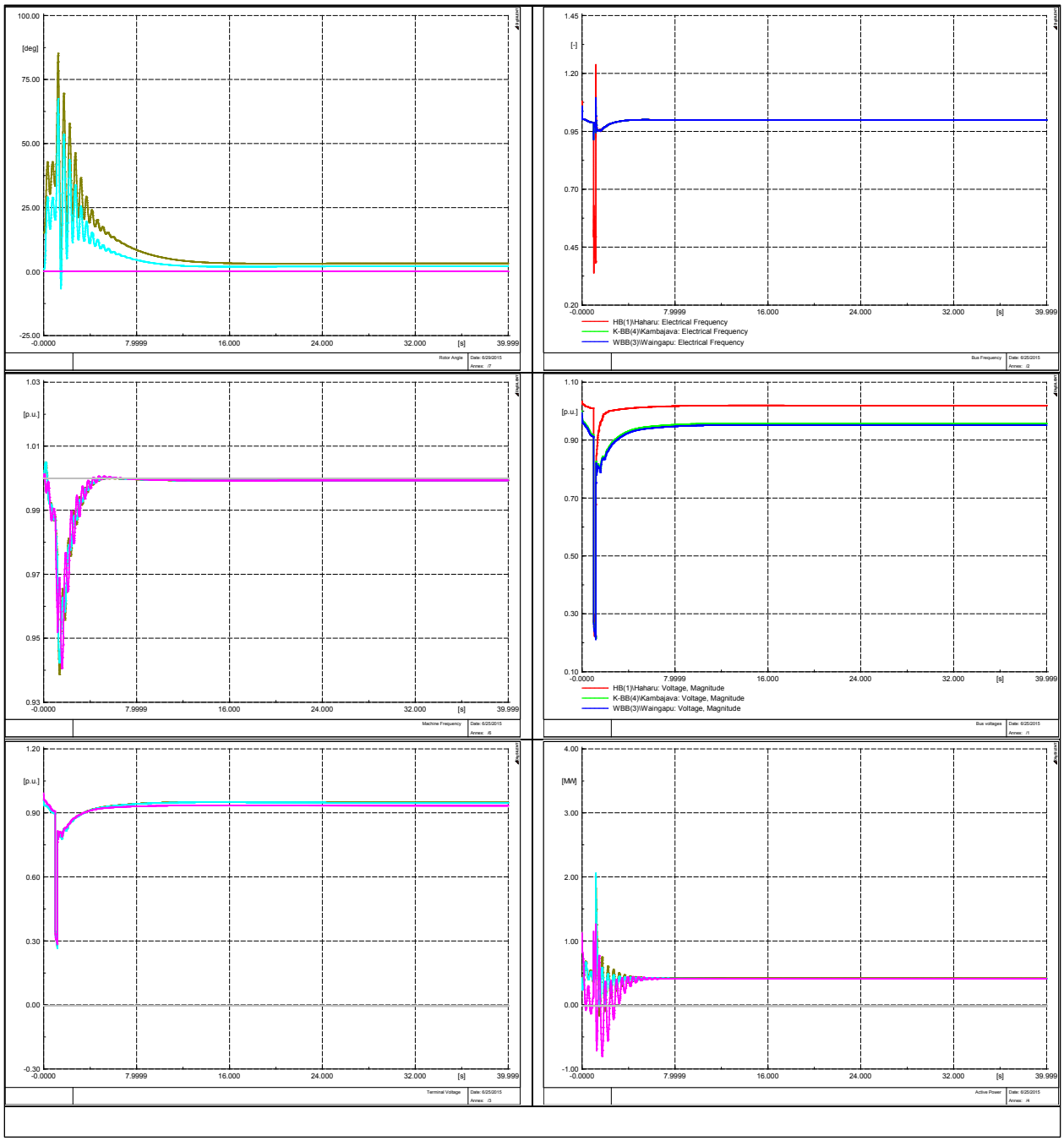

Figure G-53. High Wind Low Load with PowerStore scenario for the Kambajawa-Haharu Transmission Line Fault—Self-Clearing of Fault study case. (1) Rotor angle of generators, (2) bus frequency, (3) generator frequency, (4) bus voltage, (5) terminal voltage, and (6) real power of generators

This report is available at no cost from the National Renewable Energy Laboratory (NREL) at www.nrel.gov/publications.

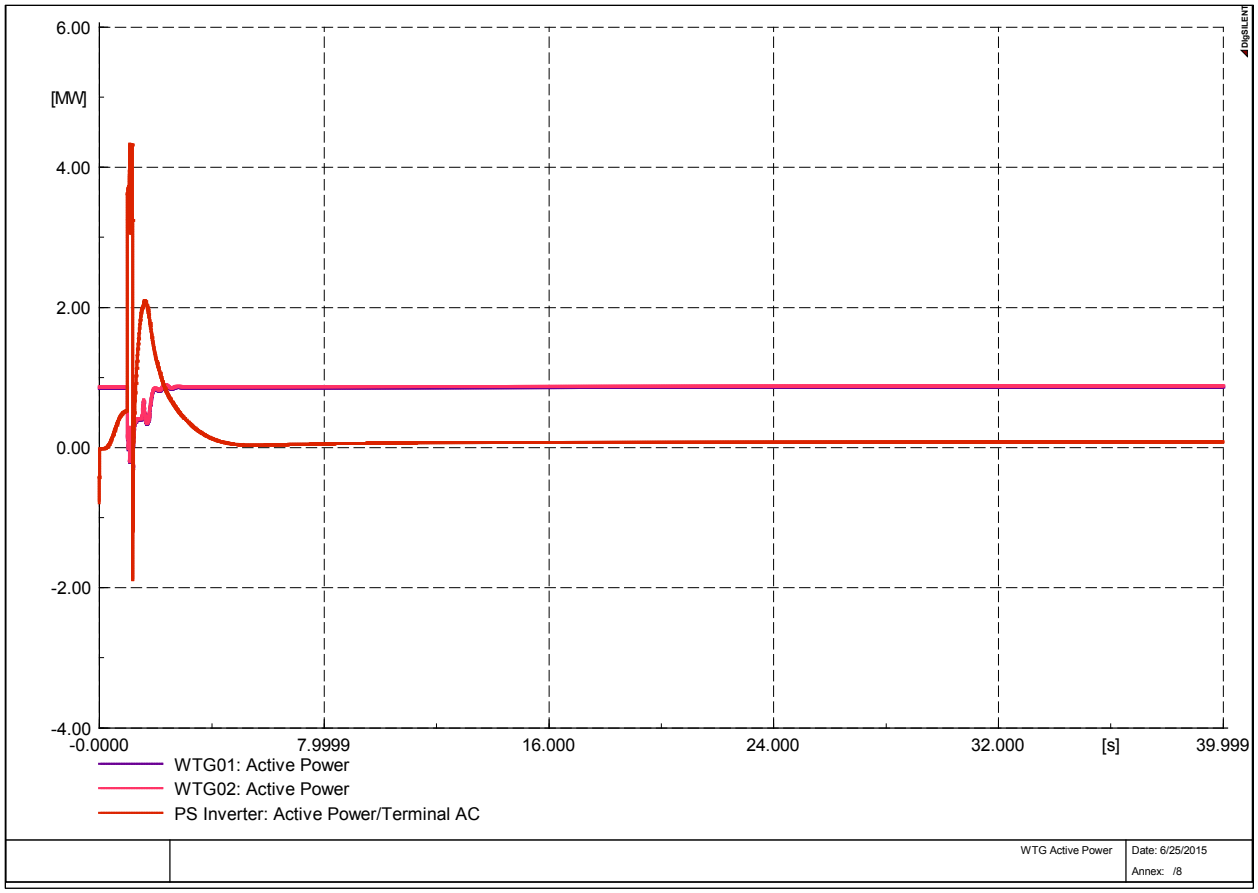

Figure G-54. Active power output of the two WTGs for the High Wind Low Load with PowerStore scenario for the Kambajawa-Haharu Transmission Line Fault—Self-Clearing of Fault study case

OBSERVATIONS: Islanding of Haharu is occurring, and the Haharu load goes offline for 180 ms. After the fault clears, the system is stable—line loadings, voltages, and frequency are within limits. PowerStore supplies power as the WTGs recover from the low-voltage ride-through.

This report is available at no cost from the National Renewable Energy Laboratory (NREL) at www.nrel.gov/publications.

Appendix H: Indonesian Translation

This report is available at no cost from the National Renewable Energy Laboratory (NREL) at www.nrel.gov/publications.

List of Acronyms

Units of Measure

Hz	hertz
km	kilometer
kV	kilovolt
kW	kilowatt
MVA	megavolt ampere
MW	megawatt
MWh	megawatt hour
pu	per unit

Acronyms

AVR	automatic voltage regulator
FRT	fault ride-through
HWHL	High Wind High Load
HWLL	High Wind Low Load
IWE	Innovative Wind Energy, Inc
KG1	Kambajawa Generator Set 1
KG2	Kambajawa Generator Set 1
LVRT	low-voltage ride-through
NREL	National Renewable Energy Laboratory
NWHL	No Wind High Load
NWLL	No Wind Low Load
PLN	Perusahaan Listrik Negara
WG1	Waingapu Generator Set 1
WG2	Waingapu Generator Set 1
WTG	wind turbine generator

This report is available at no cost from the National Renewable Energy Laboratory (NREL) at www.nrel.gov/publications.

Executive Summary

Tujuan dari projek ini adalah untuk mempelajari dampak dari pemasangan satu dan dua turbin angin berdaya 850kW dalam jaringan distribusi Sumba Timur, Indonesia. Model ini dibuat untuk jaringan 20kV seperti yang ada pada kuartal pertama 2015, dengan beban puncak 5.682MW. Data rinci jaringan dikumpulkan untuk setiap komponen jaringan. Aliran daya, analisa short circuit, dan analisa transien dilakukan dengan menggunakan DIgSILENT PowerFactory 15.2.1.

Analisis aliran daya menunjukkan bahwa untuk jaringan dasar saat ini (tanpa turbin angin) dan dengan satu atau dua 850kW PLTB, tidak terjadi overloading generator, tidak terjadi overloading konduktor, dan semua tegangan bus berada dalam batas normal.

Analisis short-circuit menunjukkan bahwa short-circuit power ratio untuk satu PLTB sebesar 850kW cukup berada di atas persyaratan minimum di bus Haharu - titik penyambungan PLTB. Selain itu, karena kontribusi dari arus short-circuit dari PLTB adalah minimal, daya terpasang perangkat di gardu listrik tidak terpengaruh.

Analisis trasien menunjukkan bahwa dengan satu PLTB sebesar 850-kW, sistem ini tidak stabil di bawah skenario gangguan sebagai berikut: kehilangan pembangkitan daya sebesar 400-kW di Kambajawa tanpa dihubungkan kembali, kehilangan pembangkitan daya sebesar 400-kW di Waingapu tanpa dihubungkan kembali dan kehilangan daya penuh yang dibangkitkan PLTB tanpa dihubungkan kembali. Dengan penambahan daya sebesar 500kW/4.17 kWh berupa energy storage ditambah dengan kemampuan auto-start dari generator cadangan kemampuan start-up dalam 10 detik setelah ganguan, jaringan sistim akan stabil.

Hasil dari analisa mengintegrasikan satu 850-kW WTG di bus Haharu di grid timur Pulau Sumba, perubahan-perubahan berikut ini dapat dipertimbangkan:

1. Pengadaan energy storage sebesar 500-kW/4.17kWh di bus Haharu ditambah dengan autostart untuk diesel CAT32 diesel yang berkapasitas 550kW di Waingapu. Untuk skenario kecepatan angin yang tinggi (diperkirakan kemungkinan terjadi dengan probabilitas 2% dari seluruh kecepatan angin) dan berbagai gangguan - misalnya terputusnya PLTB, terputusnya satu generator di Kambajawa - urutan kejadian berikut harus terjadi untuk menjaga stabilitas sistem:
    A. Unit storage akan menyediakan energi maksimum mulai saat gangguan selama 10 detik, sehingga akan mengurangi tingkat penurunan frekuensi jaringan dan meningkatkan nadir frekuensi dip selama hilangnya sebagian daya jaringan.
    B. Controller mengirimkan sinyal autostart untuk CAT32 ketika gangguan terjadi
    C. Diesel unit CAT32 segera mulai jalan dalam waktu 10 detik
    D. Unit storage terus memberikan daya selama 30 detik dan kemudian dilepas dari jaringan
    E. Sesudah 30 detik, jika ada kekurangan daya, generator lain dalam sistem akan meningkatkan daya dengan memanfaatkan kapasitas yang tersisa untuk memberikan daya tambahan yang dibutuhkan

This report is available at no cost from the National Renewable Energy Laboratory (NREL) at www.nrel.gov/publications.

2. Jika tidak ada storage yang digunakan maka pengaturan jaringan bisa sulit dijalankan. Strategi berikut dapat mengatasi tantangan itu, tetapi akan menyebabkan genset diesel berjalan pada efisiensi yang lebih rendah:

    A. Generator diesel harus dijalankan dengan memanfaatkan kapasitas daya yang cukup tinggi sehingga dapat menggantikan daya sekitar 850 kW jika kecepatan angin tiba tiba menurun saat PLTB berproduksi maksimum. Operasi semacam ini akan menjadi tantangan jika kecepatan angin tinggi dan permintaan daya rendah karena scenario semacam ini mengharuskan daya genset diesel bekerja dibawah 90% daya mampu; memang hal ini dapat menyediakan daya cadangan cukup, tapi akan mengorbankan efisiensi diesel. Praktek pada saat ini adalah menjalankan genset diesel pada 100% daya mampu (tidak ada daya cadangan).

Kesimpulannya, tambahan satu 850kW PLTD di Sumba Timur ditambah dengan unit storage sebesar 500kW, pengendali pembangkit listrik hybrid, 550kW genset diesel cadangan dengan kemamputan10 detik start-up dan komunikasi kecepatan tinggi adalah solusi yang akan meningkatkan keandalan pasokan energi, peningkatan stabilitas system, dan mengurangi emisi greenhouse gas.

Analisis transien menunjukkan bahwa dengan dua PLTB (2x850-kW) terletak di wilayah yang sama, sistem tidak stabil di bawah skenario gangguan seperti berikut: hilangnya pembangkitan daya di bus Kambajawa tanpa dihubungkan kembali, dan hilangnya dua PLTB tanpa dihubungkan kembali. Dengan penambahan berikut ini, sistem akan menjadi stabil: (1) 1.500 kW / 25 kWh storage, (2) satu 550-kW cadangan diesel generator dengan kemampuan start-up secepat 10 detik, (3) generator cadangan tambahan dengan kemampuan start up secepat 60 - detik, (4) perinkan kontroler hybrid untuk mengelola semua unit pembangkit, dan (5) jaringan komunikasi berkecepatan tinggi. Kebanyakan sistem storage komersial lithium-ion dan beberapa sistem flywheel storage memiliki sumber energi selama 60 detik dengan aliaran daya penuh; Oleh karena itu, kombinasi menambahkan (1) sampai (5) adalah tepat untuk meningkatkan keandalan pasokan energi, meningkatkan stabilitas sistem, dan mengurangi emisi greenhouse gas.

Laporan gangguan (yang disediakan oleh PLN) untuk tahun 2014 menunjukkan bahwa jumlah pemadaman dan pemutusan listrik sangatlah tinggi: sekitar satu per hari. Analisis awal menunjukkan alasan-alasan berikut (1) Short circuit yang tidak dibetulkan dalam Batas waktu yang sudah ditentukan pada jaringan pemutus, (2) Generator yang dijalankan mendekati kapasitas daya mampu (daya cadangan sangat rendah), (3) Kurangnya pemangkasan tumbuh tumbuhan yang dapat menyebabkan short circuit pada jalur penyulang, dan (4) banyaknya diesel generator terpasang yang sudah termasuk tua umurnya. Perbaikan terhadap (1) sampai (4) ditambah dengan pemasangan energy storage akan mengurangi jumlah pemadaman dan pemutusan listrik, sehingga dapat meningkatkan keandalan jaringan system daya.

Untuk mencapai tujuan jangka panjang dengan 100% sumber energi terbarukan di Pulau Sumba, laporan ini menganalisa: sumber daya bervariasi (angin / solar) + energy storage (dengan kandungan energi minimal, berkisar dari 30 detik sampai beberapa menit) + generator diesel dengan kemampuan start-up secepat (10-20 detik) + peringkat controller hybrid untuk mengatur semua pembangkitan daya. Jika diterapkan, proyek angin 850-kW akan menjadi proyek percontohan untuk ini. Sebagai catatan, ada beberapa jalan lain yang belum dijajaki, seperti

This report is available at no cost from the National Renewable Energy Laboratory (NREL) at www.nrel.gov/publications.

misalnya pembangkitan daya tanpa diesel. Bila proyek PLTB ini diperbesar, mendistribusikan energy storage di dekat pusat beban harus dipertimbangkan, sehingga tidak membuat PLTB dan energy storage menjadi titik kegagalan bila terjadi gangguan; penempatan PLTB dan energy storage secara terpisah akan meningkatkan kandalan jaringan daya. Demikian pula, untuk mengintegrasikan dua PLTB, PLTB yang kedua harus ditempatkan di lokasi sumber daya angin yang berbeda dari yang pertama, dan dihubungkan pada bus yang berbeda, untuk menghindari titik kegagalan tunggal dan dengan demikian lebih meningkatkan keandalan jaringan terhadap gangguan.

This report is available at no cost from the National Renewable Energy Laboratory (NREL) at www.nrel.gov/publications.

Table of Contents

1 Latar Belakang 387
2 Analisa Steady-State 389
2.1 Proses 389
2.2 Analisa Aliran Daya 389
2.2.1 Aliran Daya Dasar 391
2.2.2 Aliran Daya dengan PLTB Terpasang 396
2.2.3 Hasil dari Aliran Daya dengan PLTB Terpasang 401
2.3 Analisa Short – Circuit 401
2.3.1 Gangguan Short Circuit pada titik pertemuan (Point of Common Coupling - PCC) dari PLTB (sebelum PLTB terpasang) 401
2.3.2 Gangguan Short Circuit di PCC dari PLTB (sebelum dan sesudah PLTB terpasang). 405
2.4 Pedoman untuk Mengidentifikasi dan Mengatasi Perbedaan yang Tidak Dapat Diterima 405
3 Analisa Sistim Dinamis 407
3.1 Proses 407
3.2 Data Dinamis of Komponen-komponen Jaringan 407
3.2.1 Ganguan Transien dan Kondisi dari Sistim Daya 407
3.2.2 Hilangnya Sebagian Beban 408
3.2.3 Hilangnya Sebagian Pembangkitan Daya 408
3.3 Batasan Tegangan dan Trekuensi Dalam Studi Ini. 409
3.4 Skenario untuk Mengintegrasikan Satu PLTB Berdaya 850-kW 409
3.5 Analisa Sistim dengan Tambaban Energy Storage 419
3.6 Skenario Untuk Mengintegrasikan Dua PLTB (Masing-masing Berdaya 850-kW) 426
4 Kesimpulan 433
5 Referensi 435

This report is available at no cost from the National Renewable Energy Laboratory (NREL) at www.nrel.gov/publications.

List of Figures

Figure H-1. Perkiraan pertumbuhan daya puncak di Pulau Sumba. 387
Figure H-2. Sumber daya angin rata-rata per tahun di Pulau Sumba..... 388
Figure H-3. Aliran daya – Beban Tinggi, Tanpa PLTB, MTU1 =Slack Bus..... 394
Figure H-4. Aliran daya – Beban rendah, Tanpa PLTB, MAN 1 =Slack Bus..... 395
Figure H-5. Aliran Daya – Beban Tinggi, Dengan PLTB, MTU 1 =Slack Bus. 397
Figure H-6. Aliran Daya – Beban Rendah, Dengan PLTB, DOOSAN 3 =Slack Bus. 398
Figure H-7. Analisa Short Circuit untuk gangguan 3-phase pada PCC (Beban Tinggi) 403
Figure H-8. Analisa Short Circuit untuk gangguan 3-phase pada PCC (Beban Rendah)..... 404
Figure H-9. Power flow display: high load with WTGs and PowerStore. MTU1 = slack bus..... 422
Figure H-10. Power flow display: low load with WTGs and PowerStore. DOOSAN 5 = slack bus 423

List of Tables

Table H-1. Data-data bus/gardu-listrik untuk Sumba Timur 390
Table H-2. Daftar dari generator di Haharu Bus #1..... 390
Table H-3. Daftar dari generators di Kambajawa Bus #2..... 390
Table H-4. Daftar dari generators di Waingapu Bus #3..... 391
Table H-5. Beban daya dan power factor untuk beban pada ketiga gardu listrik 391
Table H-6. Skenario untuk Slack bus..... 392
Table H-7. Status On atau Off generator dan power factor nya untuk satu PLTB dan dua PLTB 393
Table H-8. Perbandingan Berbagai Skenario Aliran Daya 399
Table H-9. Perbandingan Berbagai Skenario Short Circuit di PCC 401
Table H-10. Perbandingan Kontribusi dari Short Circuit Power dari PLTB 405
Table H-11. Pedoman untuk mengidentifikasi perbedaan yang dapat diterima untuk jaringan 20kV 405
Table H-12. Guidelines to resolve unacceptable differences..... 406
Table H-13. Skenario Beban Hilang 408
Table H-14. Skenario and pengamatan untuk analisa dinamis dengan satu PLTB..... 409
Table H-15. Skenario and pengamatan untuk analisa dinamis dengan energy storage (ABB powerstore™). 424
Table H-16. Skenario and pengamatan untuk analisa dinamis Analisa Dampak Sistim untuk mengintegrasikan dua PLTB..... 427

This report is available at no cost from the National Renewable Energy Laboratory (NREL) at www.nrel.gov/publications.

1 Latar Belakang

Tujuan dari proyek ini adalah untuk mempelajari dampak dari mengintegrasikan satu atau dua PLTB berdaya 850-kW dari Vestas dengan model Tipe 3 (doubly fed induction generator - DFIG) pada jaringan sistem tenaga Pulau Sumba bagian timur, di Indonesia. Pulau Sumba terpilih sebagai pulau terpilih untuk energi terbarukan berdasarkan studi yang dilakukan oleh Hivos International bekerjasama dengan Winrock International, Inc Sumba dipilih karena pertimbangan sebagai berikut:

- Akses peggunaan listrik sangat rendah (rasio elektrifikasi 24,5% pada tahun 2010);
- Hingga kini, Sumba sangat tergantung pada pembangkit listrik tenaga diesel - PLTD (85% dari bahan bakar minyak Diesel);
- Bahan bakar minyak dikirim dari daerah lain di Indonesia, memakan biaya transportasi yang tinggi.
- Sumba kaya akan sumber daya energi terbarukan termasuk air, bio-energi, angin, dan surya/PV.
- Sekitar 20% dari penduduk Sumba dianggap berpenghasilan rendah (miskin).

Pertumbuhan beban puncak di Sumba seperti yang ditunjukkan di Figure H-1, diperkirakan akan mencapai 13MW minimal pada tahun 2025, dengan pertumbuhan sekitar 300%. Maksimal, beban puncak diperkirakan dapat mencapai sekitar 20MW pada tahun 2025 (pertumbuhan sekitar 500%).

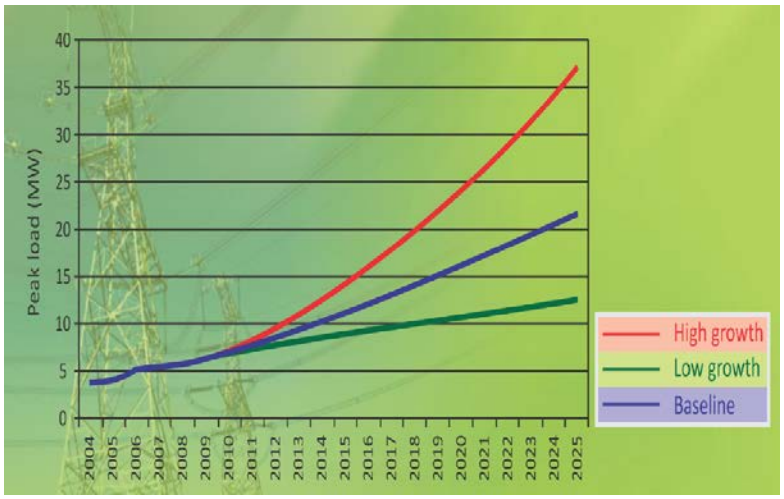

Figure H-1. Perkiraan pertumbuhan daya puncak di Pulau Sumba. ***Image from Hivos International (2011)***

Peta sumber daya angin ada di Figure H-2. Di gambarkan bahwa sumber daya angin pada umumnya baik untuk keseluruhan pulau Sumba mencapai ketinggian sebesar 7.5m/detik pada tempat tempat tertentu tidak jauh dari pusat beban.

This report is available at no cost from the National Renewable Energy Laboratory (NREL) at www.nrel.gov/publications.

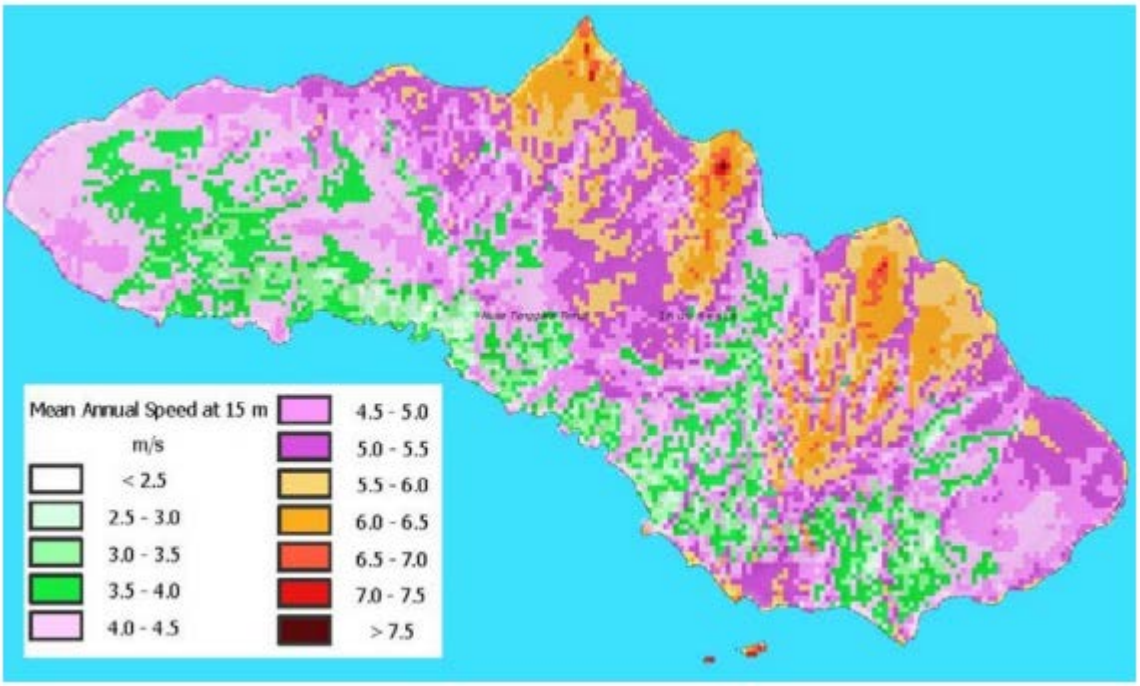

Figure H-2. Sumber daya angin rata-rata per tahun di Pulau Sumba.

Image from Hirsch et al. (2015)

Proyek ini merupakan kerjasama antara NREL, Winrock International Inc, dan PLN (perusahaan listrik di Indonesia). Dalam panduan "Steady-State and Dynamic System Model Validation" dianjurkan oleh North American Electric Reliability Corporation untuk mengembangkan dan menerapkan proses validasi data secara tercatat untuk memvalidasi model steady-state dan model sistem dinamis. Untuk itu, team ini telah mengembangkan proses tersebut, yang dijelaskan di sini, dan harus digunakan untuk memvalidasi model steady-state dan model dinamis. Sebagai catatan, langkah-langkah validasi ini belum dilaksanakan untuk proyek ini.

This report is available at no cost from the National Renewable Energy Laboratory (NREL) at www.nrel.gov/publications.

2 Analisa Steady-State

Analisa steady state dilakukan untuk menganalisa kondisi steady-state dari sistim jaringan daya termasuk tegangan, aliran daya melalui cabang cabang dan transformator dengan mempertimbangkan bermacam macam kasus yang mengancam kelansungan sistim daya yang beroperasi dibawah stress.

2.1 Proses

Proses yang digunakan untuk menganalisa model steady-state yang didasarkan pada North American Electric Reliability Corporation (NERC) "Procedures for Validation of Powerflow and Dynamics Cases". Beberapa perubahan yang dilakukan dengan prosedur berdasarkan Peraturan Daerah (PLN) dan berdasarkan pertimbangan teknis. Berikut ini data yang diperoleh dari PLN di Sumba Timur. Data lengkap pada Lampiran A.

3. Data didapatkan dari PLN.
    B. Jaringan penyulang
        i. Status
    C. Transformator
        i. Status
        ii. Load tap changer (LTC) position
        iii. Tipe (transformator dengan LTCs diganti dengan tipe 1 untuk mengunci LTC)
    D. Beban
        i. Daya aktif
        ii. Daya reactif
    E. Generator
        i. Daya aktif
        ii. Daya reaktif
4. Semua genset dan PLTB yang terhubung dengan jaringan di sambung melalui jaringan 20-kV sebagai generator pada bus-bus tertentu.

2.2 Analisa Aliran Daya

Data data jaringan sistim daya, data beban, data lengkap pembangkit daya - PTL, semuanya diperlukan untuk menganalisa model sistim daya. Appendix B berisi input data untuk setiap scenario (kasus), dan Appendix C terdiri dari hasil analisa aliran daya untuk setiap scenario (kasus).

This report is available at no cost from the National Renewable Energy Laboratory (NREL) at www.nrel.gov/publications.

Table H-1. Data-data bus/gardu-listrik untuk Sumba Timur

No.	Nama Gardu Listrik	Tingkat Tegangan dalam kV	Daya Pemutus (kA)	Daerah/zona	Nama Distrik
1	Haharu	20	16	Hambapraing	Haharu
2	Kambajawa	20	16	East Sumba	Kambajawa
3	Waingapu	20	16	Waingapu	Waingapu

Catatan: MHaharu adalah bus diantara Haharu dan Kambajawa. Bus ini diperkenalkan karena tipe kawat yang digunakan tidak sama — sepanjang 17 Km kawat dari satu tipe dan 8Km berikutnya kawatnya dari tipe yang berbeda. Didalam diagram yang ada, bus ini di label sebagai "Single busbar(3)/K-H2" seperti tertera dibawah bus Haharu.

Table H-2. Daftar dari generator di Haharu Bus #1

No.	Nama Generator	Tegangan (kV)	Kapasitas Daya MVA
1	WTG1	0.69	0.85
2	WTG2	0.69	0.85

Note: Generator kedua tidak dipakai jika hanya mengintegrasikan satu PLTB 850-kW.

Table H-3. Daftar dari generators di Kambajawa Bus #2

SNo.	Nama Generator	Tegangan (kV)	Kapasitas Daya MVA
1	Volvo	0.4	0.22
2	MTU1	0.4	0.65
3	MAN1	0.4	0.43
4	MTU2	0.4	0.43
5	MTU4	0.4	0.43
6	MAN2	0.4	0.32
7	DOOSAN1	0.4	0.42
8	DOOSAN2	0.4	0.42
9	DOOSAN3	0.4	0.42
10	DOOSAN4	0.4	0.42
11	DOOSAN5	0.4	0.42
Total:			4.58

This report is available at no cost from the National Renewable Energy Laboratory (NREL) at www.nrel.gov/publications.

Table H-4. Daftar dari generators di Waingapu Bus #3

SNo.	Nama Generator	Tegangan (kV)	Kapasitas Daya MVA
1	CAT	0.4	0.55
2	YANMAR	6.3	0.22
3	DEUTZ1	0.4	0.18
4	DEUTZ2	0.4	0.18
5	SWD1	6.3	0.22
6	SWD2	6.3	0.22
7	SWD3	6.3	0.22
Total			1.79

2.2.1 Aliran Daya Dasar

Aliran daya dasar menganalisa sistim daya sebelum PLTB terpasang dengan kondisi beban rendah dan beban puncak.

Menurut informasi yang didapat, total beban maksimum dalam sistim adalah 5.682 MW sekitar jam 6:00pm sore dan the total beban minimum dari system adalah 2.751 MW pada siang hari. Beban masing masing termasuk beban maksium dan minimum untuk setiap bus diberikan pada table H-5. Informasi tentang power factor beban juga diberikan untuk kondisi yang bersangkutan.

Table H-5. Beban daya dan power factor untuk beban pada ketiga gardu listrik

Nomor Bus	Nama of gardu-listrik	Level Tegangan dalam kV	Beban Maximum (MW), beban puncak	Power factor, beban puncak	Beban Minimum (MW), beban minimum	Power factor, beban minimum
1	Haharu	20	0.104	0.85	0.051	0.85
2	Kambajawa	20	3.494	0.9	1.691	0.95
3	Waingapu	20	2.084	0.9	1.0086	0.95
	Total		5.682		2.751	

Dari informasi yang didapat selama pengumpulan data dari PLN Sumba, selama beban minimum, hanya generator di Kambajawa yang di operasikan. Selama beban puncak hanya generator di Waingapu yang di operasikan. Selama beban puncak, beberapa generator di Waingapu di operasikan tergantung dari tambahan daya yang diperlukan. Urutan operasi ini berdasarkan dari efisiensi bahan bakar dari generator nya. Prioritas pertama adalah CAT C32 disusul oleh Yanmar, DEUTZ, SWD.

Untuk memodel tipe pembangkitan daya seperti ini, beberapa pilihan untuk mewakili slack bus digunakan untuk bermacam macam scenario.

This report is available at no cost from the National Renewable Energy Laboratory (NREL) at www.nrel.gov/publications.

Table H-6. Skenario untuk Slack bus

Scenario	Slack Bus
Tanpa Angin Beban Tinggi	MTU 1
Tanpa Angin Beban Rendah	MAN 1
Angin Tinggi (1)[a] Beban Tinggi	MTU 1
Angin Tinggi (2) Beban Rendah	DOOSAN 3
Angin Tinggi (2) Beban Tinggi	MAN 1
Angin Tinggi (2) Beban Rendah	DOOSAN 3

[a] Angka dalam tanda kurung menunjukkan jumlah PLTB dalam jaringan yang di analisa

Data yang dikumpulkan dari PLN Sumba menunjukkan bahwa semua generator di operasikan dengan power factor sebesar 0.8. Untuk model power factor seperti ini menyebabkan aliran daya reaktif yang besar dibandingkan dengan beban, sehingga menyebabkan penyerapan daya reaktif yang tinggi pada slack-bus. Untuk mengatasi hal ini, beberapa generator di operasikan pada PF=1 untuk memastikan penyerapan daya reaktif yang minimal pada slack-bus. Tabel H-7 adalah daftar generator yang di matikan dan dioperasikan dengan PF=1 dalam empat scenario. Hasil dari analisa dasar menunjukkan bahwa generator di Kambajawa tidak mengalami overload, and semua tegangan berada dalam batasan yang ditentukan.

This report is available at no cost from the National Renewable Energy Laboratory (NREL) at www.nrel.gov/publications.

Table H-7. Status On atau Off generator dan power factor nya untuk satu PLTB dan dua PLTB

Nama Generator	Daya Mampu	Tanpa Angin Beban Tinggi		Tanpa Angin Beban Rendah		Angin Tinggi (1) Beban Tinggi		Angin Tinggi (1) Beban Rendah		Angin Tinggi (2) Beban Tinggi		Angin Tinggi (2) Beban Rendah	
		Status	PF	Status	PF	Status	PF	Status	PF	Status	PF	Status	PF
MTU2	430	ON	0.8	ON	0.8	ON	0.8	OFF	0	ON	0.8	OFF	0
DOOSAN1	420	ON	1	ON	1	ON	1	ON	1	ON	1	ON	1
DOOSAN2	420	ON	1	ON	1	ON	0.8	ON	0.8	ON	0.8	ON	0.8
DOOSAN3	420	ON	0.8	ON	1	ON	0.8	ON	0.8	ON	0.8	ON	0.8
DOOSAN4	420	ON	0.8	ON	0.8	ON	0.8	ON	0.8	ON	0.8	OFF	0
DOOSAN5	420	ON	0.8	ON	0.8	ON	0.8	ON	0.8	ON	0.8	OFF	0
VOLVO	220	ON	0.8	OFF	0	ON	0.8	OFF	0	ON	0.8	OFF	0
MAN1	430	ON	0.8	ON	0.8	ON	0.8	OFF	0	ON	0.8	OFF	0
MTU1	650	ON	0.8	OFF	0	ON	0.8	OFF	0	ON	0.8	OFF	0
MTU4	430	ON	0.8	OFF	0	ON	0.8	OFF	0	OFF	0	OFF	0
CAT	550	ON	0.8	OFF	0	ON	0.8	OFF	0	ON	0.8	OFF	0
YANMAR	220	ON	0.8	OFF	0	ON	1	OFF	0	OFF	0	OFF	0
MAN2	320	ON	0.8	OFF	0	OFF	0	OFF	0	OFF	0	OFF	0
DEUTZ-1	180	ON	1	OFF	0	OFF	0	OFF	0	OFF	0	OFF	0
DEUTZ-2	180	ON	0.8	OFF	0	ON	1	OFF	0	OFF	0	OFF	0
SWD-1	220	ON	1	OFF	0	OFF	0	OFF	0	OFF	0	OFF	0
SWD-2	220	ON	0.8	OFF	0	OFF	0	OFF	0	OFF	0	OFF	0
SWD-3	220	OFF	0	OFF	0	OFF	0	OFF	0	OFF	0	OFF	0
WTG	850	OFF	0	OFF	0	ON	1	ON	1	ON	1	ON	1

This report is available at no cost from the National Renewable Energy Laboratory (NREL) at www.nrel.gov/publications.

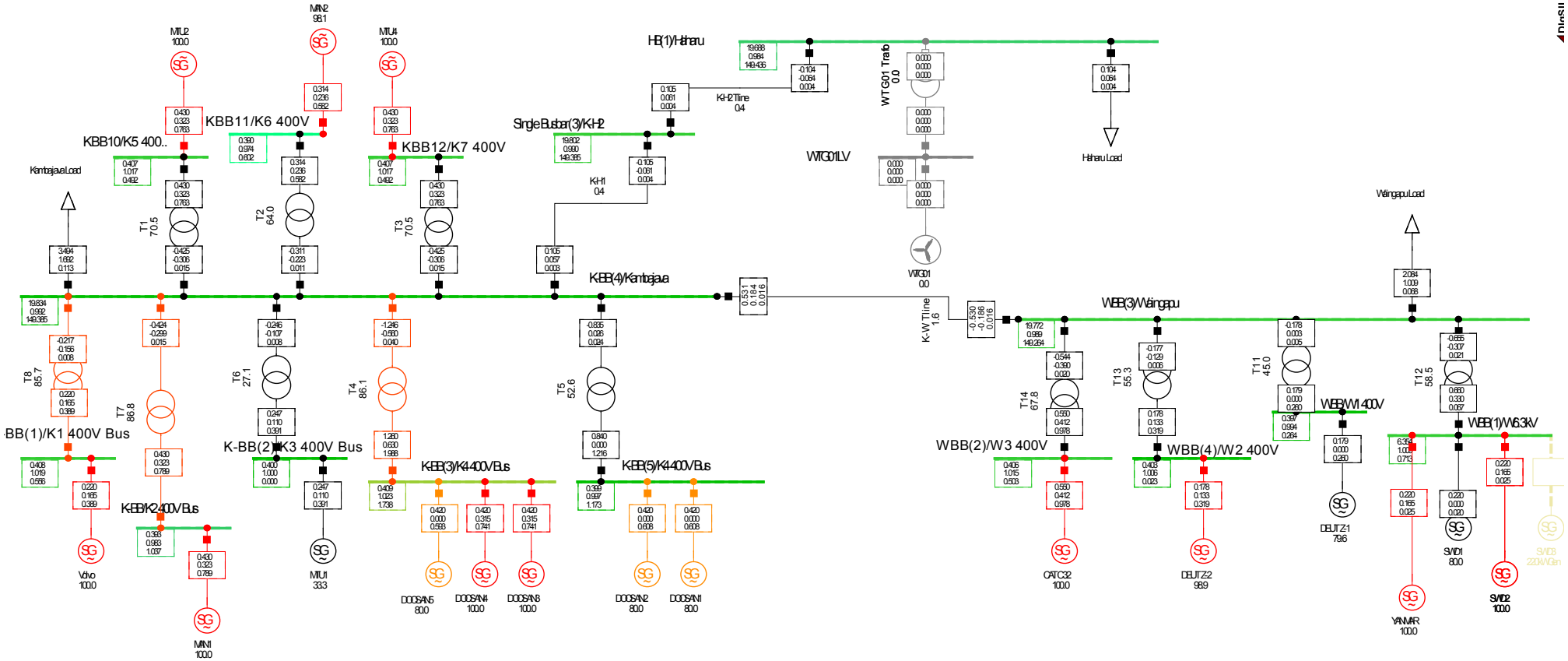

Legends:

Nodes	Branches
Line-Line Voltage, Magnitude [kV]	Active Power [MW]
Voltage, Magnitude [p.u.]	Reactive Power [Mvar]
Voltage, Angle [deg]	Current, Magnitude [kA]

Figure H-3. Aliran daya – Beban Tinggi, Tanpa PLTB, MTU1 =Slack Bus

This report is available at no cost from the National Renewable Energy Laboratory (NREL) at www.nrel.gov/publications.

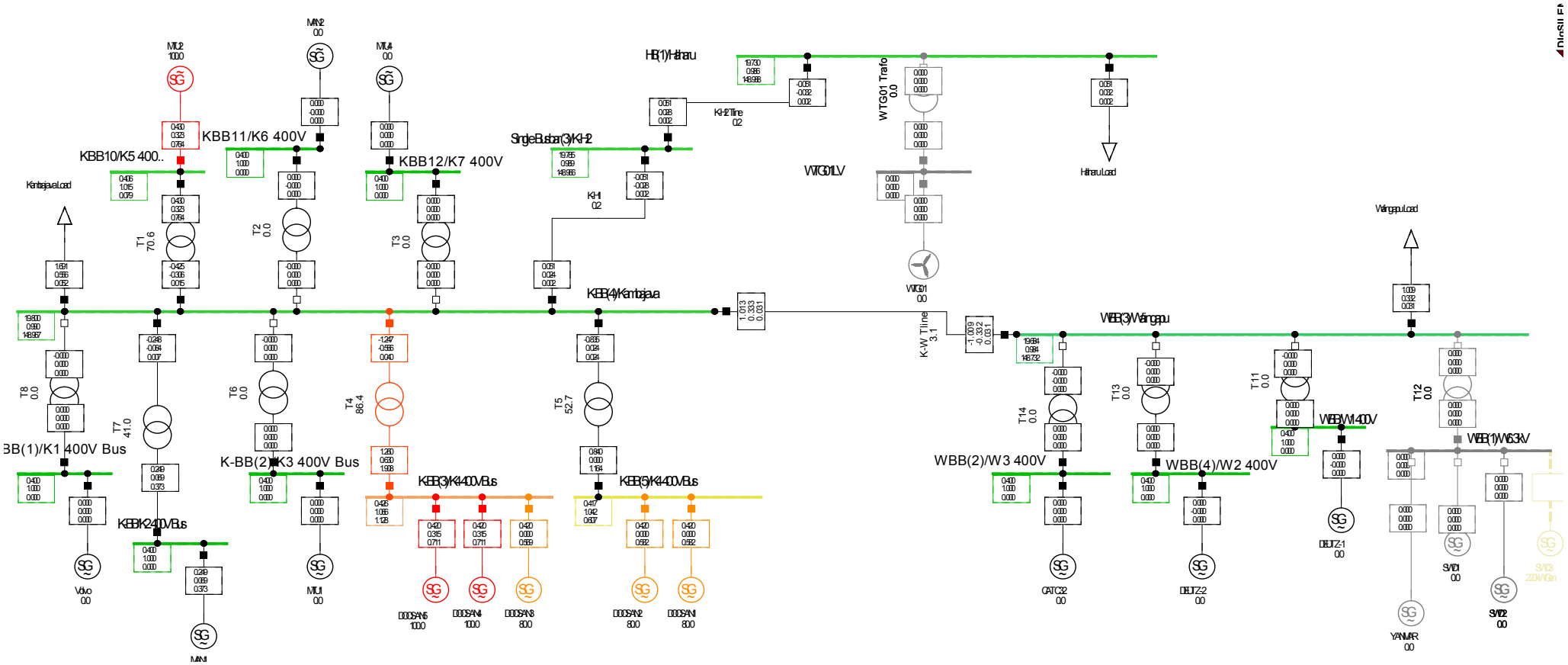

Figure H-4. Aliran daya – Beban rendah, Tanpa PLTB, MAN 1 =Slack Bus

This report is available at no cost from the National Renewable Energy Laboratory (NREL) at www.nrel.gov/publications.

2.2.2 Aliran Daya dengan PLTB Terpasang

Sistim ini dianalisa dengan PLTB terpasang dalam dua scenario yang sama seperti terdahulu sehubungan dengan pemasangan satu dan dua PLTB dengan kapasitas sebesar 850 kW dengan tegangan sebesar 0.69 kV. Analisa sistim daya di lakukan dengan kondisi beban yang sama seperti analisa dasar dengan scenario yang sama. Hasilnya di berikan di Tabel 8.

This report is available at no cost from the National Renewable Energy Laboratory (NREL) at www.nrel.gov/publications.

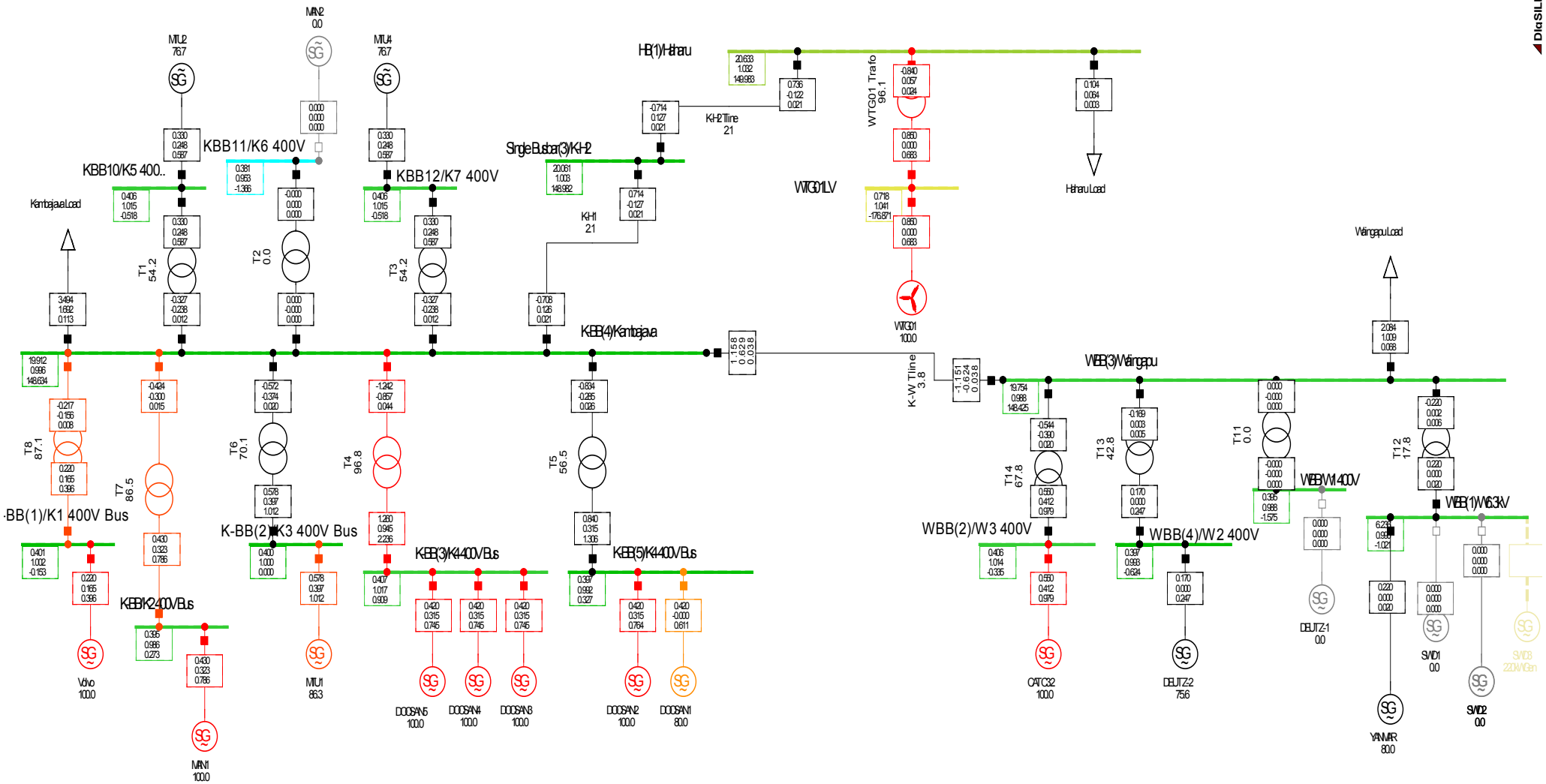

Figure H-5. Aliran Daya – Beban Tinggi, Dengan PLTB, MTU 1 =Slack Bus.

This report is available at no cost from the National Renewable Energy Laboratory (NREL) at www.nrel.gov/publications.

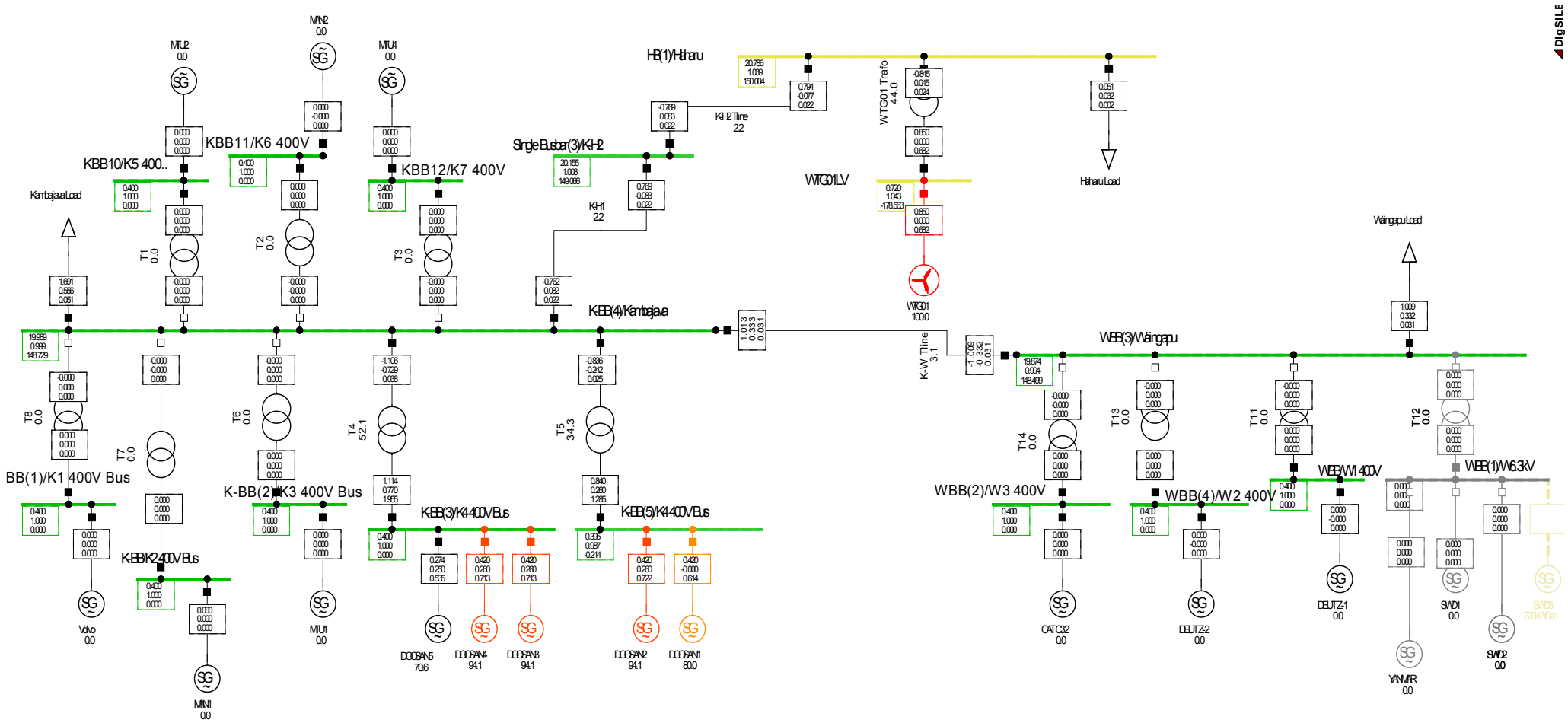

Figure H-6. Aliran Daya – Beban Rendah, Dengan PLTB, DOOSAN 3 =Slack Bus.

This report is available at no cost from the National Renewable Energy Laboratory (NREL) at www.nrel.gov/publications.

Table H-8. Perbandingan Berbagai Skenario Aliran Daya

	High Load Scenario			Low Load Scenario		
	Without WTG(s)	With 1 WTG	With 2 WTGs	Without WTG(s)	With 1 WTG	With 2 WTGs
INPUT						
Load, PF at Kambajawa	3.494 MW, 0.9	3.494 MW, 0.9	3.494 MW, 0.9	1.691 MW, 0.95	1.691 MW, 0.95	1.691 MW, 0.95
Load, PF at Waingapu	2.084 MW, 0.9	2.084 MW, 0.9	2.084 MW, 0.9	1.009 MW, 0.95	1.009 MW, 0.95	1.009 MW, 0.95
Load, PF at Haharu	0.104 MW, 0.85	0.104 MW, 0.85	0.104 MW, 0.85	0.051 MW, 0.85	0.051 MW, 0.85	0.051 MW, 0.85
OUTPUT						
Real Power Generated by WTG(s)	0	0.85 MW	1.7 MW	0	0.85 MW	1.7 MW
Reactive Power Generated by WTG(s)	0	0 MVAR	0 MVAR	0	0.085 MVAR	0 MVAR
Real Power Generated by Kambajawa Generators	4.171 MW	3.988 MW	3.956 MW	2.779 MW	1.954 MW	1.198 MW
Reactive Power Generated by Kambajawa Generators	2.108 MVAR	2.64 MVAR	2.955 MVAR	1.022 MVAR	1.031 MVAR	1.095 MVAR
Real Power Generated by Waingapu Generators	1.567 MW	0.94 MW	0.22 MW	0	0	0
Reactive Power Generated by Waingapu Generators	0.876 MVAR	0.412 MVAR	0.165 MVAR	0	0	0
PU Voltage at Haharu (20 kV)	0.984	1.032	1.084	0.986	1.04	1.081
PU Voltage at MHaharu (20 kV)	0.99	1.003	1.025	0.989	1.008	1.018
PU Voltage at Kambajawa (20 kV)	0.992	0.996	1.009	0.99	0.999	1.001
PU Voltage at Waingapu (20 kV)	0.989	0.988	0.997	0.984	0.994	0.996

This report is available at no cost from the National Renewable Energy Laboratory (NREL) at www.nrel.gov/publications.

	High Load Scenario			Low Load Scenario		
	Without WTG(s)	**With 1 WTG**	**With 2 WTGs**	**Without WTG(s)**	**With 1 WTG**	**With 2 WTGs**
Real Power Consumed by Line between Kambajawa and MHaharu	0 MW	0.006 MW	0.025 MW	0 MW	0.007 MW	0.027 MW
Reactive Power Consumed by Line between Kambajawa and MHaharu	0.004 MVAR	0.001 MVAR	0.01 MVAR	0.004 MVAR	0.001 MVAR	0.011 MVAR
Real Power Consumed by Line between MHaharu and Haharu	0.001 MW	0.022 MW	0.092 MW	0 MW	0.025 MW	0.1 MW
Reactive Power Consumed by Line between MHaharu and Haharu	0.003 MVAR	0.005 MVAR	0.033 MVAR	0.004 MVAR	0.006 MVAR	0.036 MVAR
Real Power Consumed by Line between Kambajawa and Waingapu	0.001 MW	0.007 MW	0.016 MW	0.004 MW	0.004 MW	0.004 MW
Reactive Power Consumed by Line between Kambajawa and Waingapu	0.002 MVAR	0.005 MVAR	0.017 MVAR	0.001 MVAR	0.001 MVAR	0.001 MVAR
Haharu-Kambajawa Line Loading in kA (3.18 MVA)*	0.004	0.021	0.042	0.002	0.022	0.044
Kambajawa-Waingapu Line Loading in kA (7.4 MVA)*	0.016	0.05	0.059	0.031	0.031	0.031

This report is available at no cost from the National Renewable Energy Laboratory (NREL) at www.nrel.gov/publications.

2.2.3 Hasil dari Aliran Daya dengan PLTB Terpasang

Hasil-hasil nya menunjukkan bahwa:

- Tegangan di semua bus berada dalam batas Peraturan Listrik (grid code)
- Beban pada penyulang berada dalam batas pemanasan (thermal limit) dari kawat yang dipakai

Dari perspektif aliran daya, pemasangan satu atau dua PLTB sebesar 850kW tidak akan menyebabkan dampak yang merusak/jelek pada jaringan.

2.3 Analisa Short – Circuit

Dua tipe analisa short-circuit dilakukan:

- Penghitungan Short-circuit power ratio untuk mengukur kekuatan dari jaringan pada titik pertemuan. Section 2.3.1 menjelaskan analisa ini.
- Penghitungan of kontribusi short-circuit dari PLTB. Section 2.3.2 menjelaskan analisa ini.

2.3.1 Gangguan Short Circuit pada titik pertemuan (Point of Common Coupling - PCC) dari PLTB (sebelum PLTB terpasang)

Skenario apa adanya, short-circuit power di Haharu bus (PCC dari PLTB) dihitung.

Table H-9. Perbandingan Berbagai Skenario Short Circuit di PCC

	Tanpa WTG	
	3- Phase Gangguan saat Beban Tinggi	**3- Phase Gangguan saat Beban Rendah**
INPUT PARAMETERS		
Pembangkitan Daya di Kambajawa	4.171 MW	2.779 MW
Pembangkitan Daya di Waingapu	1.567 MW	0 MW
OUTPUT		
Short-Circuit Power di Haharu bus	14.8 MVA	12.3 MVA
Short-Circuit Power Ratio di Haharu bus (untuk PLTB 0.85MW)	17.41	14.47
Kontribusi Saat Gangguang dari Generator di Kambajawa	11.3 MVA	12.3 MVA
Kontribusi Saat Gangguang dari Generator di Waingapu	3.5 MVA	0 MVA

This report is available at no cost from the National Renewable Energy Laboratory (NREL) at www.nrel.gov/publications.

Catatan, terminology yang dipakai dalam bagian ini dijelaskan disini.

- *Short-circuit power* sebetulnya adalah short circuit-daya penuh output dari generator dengan unit terpakai MVA. Ini menunjukkan bahwa sebetulnya saat short-circuit, "daya aktif" sebetulnya sangatlah kecil, "daya penuh" yang tercantum sebagian besar di serap sebagai "daya reaktif" yang diserap dalam reaktansi didalam generator, transformator, dan reaktansi penyulang.

- *Short-Circuit Power ratio (SCPR)* dinyatakan dalam satuan per-unit. SCPR = 17.41 selama beban tinggi dan dan 14.47 selama beban rendah. Ini semua jauh diatas SCPR yang diperlukan untuk memasang PLTB. Di semua grid codes yang ada, SCPR yang diperlukan biasanya berkisar 5 (dihitung saat PLTB off) atau lebih tinggi untuk menghidari variasi tegangan di PCC pada saat PLTB beroperasi dengan kecepatan angin yang tinngi.

This report is available at no cost from the National Renewable Energy Laboratory (NREL) at www.nrel.gov/publications.

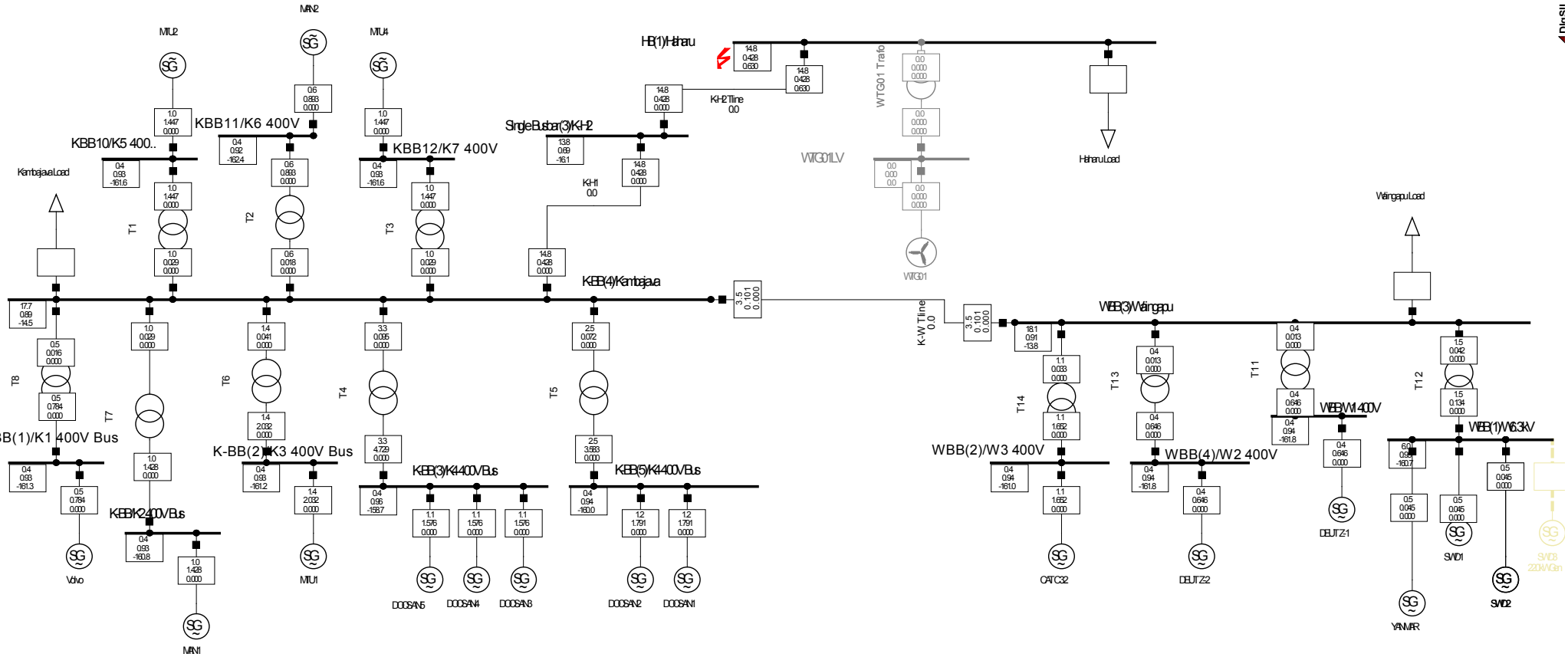

Legends:

Short-Circuit Nodes	*Nodes*
Initial Short-Circuit Power [MVA]	*Line-Line Voltage, Magn*
Initial Short-Circuit Current [kA]	*Voltage, Magnitude [p.u*
Peak Short-Circuit Current [kA]	*Voltage, Angle [deg]*

Figure H-7. Analisa Short Circuit untuk gangguan 3-phase pada PCC (Beban Tinggi)

This report is available at no cost from the National Renewable Energy Laboratory (NREL) at www.nrel.gov/publications.

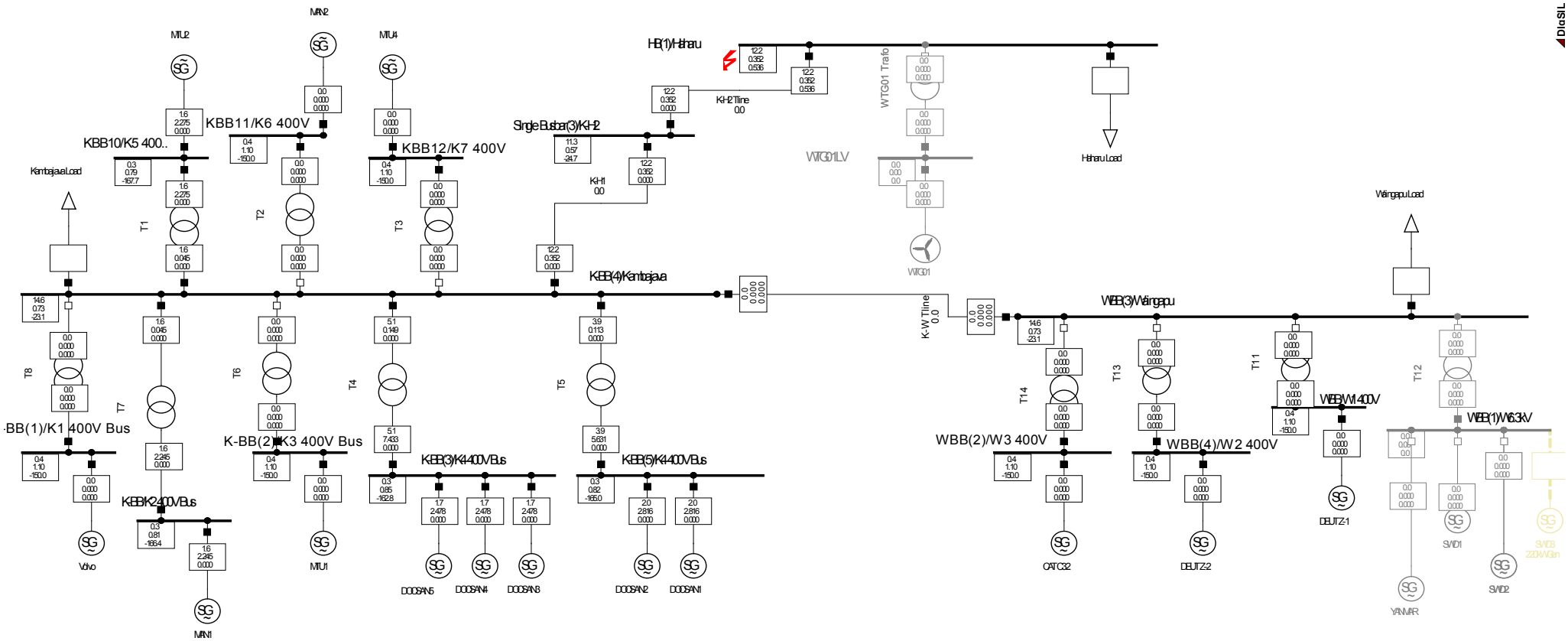

Figure H-8. Analisa Short Circuit untuk gangguan 3-phase pada PCC (Beban Rendah)

This report is available at no cost from the National Renewable Energy Laboratory (NREL) at www.nrel.gov/publications.

2.3.2 Gangguan Short Circuit di PCC dari PLTB (sebelum dan sesudah PLTB terpasang)

Table H-10. Perbandingan Kontribusi dari Short Circuit Power dari PLTB

	Beban Tinggi		Beban Rendah	
	Short Circuit di Kambajawa	Short Circuit di Waingapu	Short Circuit di Kambajawa	Short Circuit di Waingapu
Satu PLTB berdaya 850 kW				
Short-Circuit Power pada Bus yang Terganggu	41.8 MVA	34.1 MVA	30.8 MVA	26.4 MVA
Kontribusi Gangguan dari PLTB	1.8 MVA	1.5MVA	1.9 MVA	1.6 MVA
Dua PLTB masing masing berdaya 850 kW				
Short-Circuit Power pada Bus yang Terganggu	34 MVA	39.8 MVA	17.9 MVA	16.3 MVA
Kontribusi Gangguan dari PLTB	2.8 MVA	3.4 MVA	3.6 MVA	3.2 MVA

Seperti diduga, kontribusi short-circuit power dari PLTB sangatlah minimal. Kesimpulannya adalah Daya Terpasang (MVA) dari sistim pengaman yang terpasang dan equipment terpasang lainnya di gardu listrik seharusnya cukup untuk memadai satu atau dua PLTB masing masing berdaya 850kW.

2.4 Pedoman untuk Mengidentifikasi dan Mengatasi Perbedaan yang Tidak Dapat Diterima

Tabel dibawah ini dapat dipakai untuk menidentifikasi dan mengatasi perbedaan dalam proses memvalidasi steady state model. Table 11 dibawah ini bisa dipakai untuk perbedaan dalam bentuk prosentase dan perbedaan dalam harga mutlak untuk aliran daya aktif, daya reaktiv, dan power factor dalam jaringan distribusi dengan tegangan 20kV atau tegangan yang lebih rendah untuk renewable energy power plants berkapasitas 10MW atau lebih rendah[1].

Table H-11. Pedoman untuk mengidentifikasi perbedaan yang dapat diterima untuk jaringan 20kV

Quantity	Acceptable Differences
Bus Voltage Magnitude	85% to 110%
Frequency	51 to 47.5 Hz
Power factor	0.9 leading to 0.85 lagging

[1] "Guidelines for Connecting Renewable Energy Generation Plants (REGP) to PLN's Distribution System," Feb 2014, approved by PLN Board of Directors as DK. Dir. PLN No.0357/2014.

This report is available at no cost from the National Renewable Energy Laboratory (NREL) at www.nrel.gov/publications.

Table H-12. Guidelines to resolve unacceptable differences

Quantity	Resolution Guidelines
Bus Voltage Magnitude Real Power Flow Reactive Power Flow	Verify that the generation should be modeled as gross instead of net values. Verify that shunt capacitors are sized correctly. Verify that all state estimator loads are accounted for. Verify that the network configuration is modeled appropriately based on the circuit breaker and switch status (e.g., does a bus need to be modeled as a split bus due to an open circuit?). Verify that the modeled line and transformer impedances are correct. Verify that no-load tap changers are modeled appropriately for all transformers. Verify that all other system elements are modeled appropriately. Consider whether PI data should be used when state estimator data are questionable. Consider whether differences are caused by measurement error.

This report is available at no cost from the National Renewable Energy Laboratory (NREL) at www.nrel.gov/publications.

3 Analisa Sistim Dinamis

3.1 Proses

Proses yang digunakan untuk menganalisa model steady-state yang didasarkan pada North American Electric Reliability Corporation (NERC) "Procedures for Validation of Powerflow and Dynamics Cases". Beberapa perubahan yang dilakukan dengan prosedur berdasarkan Peraturan Daerah (PLN) dan berdasarkan pertimbangan teknis.

Pada intinya, analisa sistem dinamis dilakukan dengan menggunakan kondisi sistem yang tercatat pada pada hari dan waktu tertentu sebagai data masukan untuk melihat apakah output (tegangan bus dan aliran daya aktif dan reaktif) yang dihasilkan oleh model yang dipakai sesuai dengan kondisi sistem yang diukur di lapangan. Lebih penting lagi, analisa ini harus termaksuk analisa sebelum terjadi gangguang, pada saat gangguan, dan sesudah gangguan terutama mencakup tegangan, frekuensi, overload penyulang atau transformator) di bus yang penting.

Berbagai ganguan harus dipertimbangkan dengan masukan dari PLN lokal. Pertimbangan harus dimulai dengan kemungkinan gangguan terbanyak berdasarkan data historis yang dicatat oleh PLN. Beberapa contoh kontinjensi untuk beban puncak / ringan, dan dengan / tanpa generator PLTB harus diikut sertakan:

- Pemutusan PLTB (mencakup kecepatan angin rendah dan kecepatan angin tinggi)
- Pemutusan sebagian dari beban dari jaringan
- Pemutusan salah satu atau beberapa diesel genset dari jaringan
- Gangguan pada bus-bus tertentu

Untuk analisa ini, digunakan metoda electromechanical transient simulation metoda dati PowerFactory dengan menggunakan harga effective (rms). Dalam metoda ini “A-Stable” algorithm dipakai untuk step-size yang bisa di adaptasi didalam perhitungan integrasi.

3.2 Data Dinamis of Komponen-komponen Jaringan

Data dinamis yang dipakai untuk simulasi dinamis di cantumkan di Appendix E. Untuk komponen komonen yang datanya tidak disediakan oleh PLN, atau yang tidak tersedia untuk Sumba Timur, kami memakai data dinamis umum (generic).

3.2.1 Ganguan Transien dan Kondisi dari Sistim Daya

Kasus-kasus berikut ini akan di periksa dan diamati:

- Sebelum Gangguan: Analisa dasar tanpa PLTB (beban puncak dan beban rendah). In di beri nama “Tanpa Angin Beban Tinggi” dan “Tanpa Angin Beban Rendah”
- Sebelum Gangguan: Satu PLTB terpasang (beban puncak dan beban rendah). In di beri nama “Angin Tinggi Beban Tinggi” dan “Angin Tinggi Beban Rendah”
- Terminologi “gangguan” dipakai untuk menunjukkan adanya “short-circuit” atau “pemutusan” beban ataupun generator.
- Analisa gangguan diikuti oleh:

This report is available at no cost from the National Renewable Energy Laboratory (NREL) at www.nrel.gov/publications.

- Self-clearing dimana tidak satupun (beban, generator, penyulang) di putuskan dari jaringan. Kasus-kasus ini tidak memiliki label tambahan. Hal ini diasumsikan bahwa gangguan hilang dengan sendirinya sebelum pemutus sirkuit diaktifkan.
- No Self-Clearing. Kasus-kasus ini diberi label dengan kata-kata "No Self-Clearing". Hal ini diasumsikan bahwa gangguan bertahan tanpa ada upaya untuk menghapus gangguan ini. Jika gangguan ini tidak diisolasi, akhirnya sistem jaringanlistrik dapat mengalami “black out”.

Waktu gangguan akan dipilih selama 9 cycles atau 0,18 detik (untuk 50Hz) seperti yang biasa digunakan di Amerika Serikat.

Macam gangguan pertama yang akan dianalisa adalah gangguan pada bus tertentu (di masing-masing tiga bus-Haharu, Kambajawa dan Waingapu).

3.2.2 Hilangnya Sebagian Beban

Gangguan yang dapat menyebabkan hilangnya beban umumnya karena overload atau short-circuit. Biasanya urutan peristiwa yang terjadi adalah akibat dari kerja system pengaman. Skenario yang paling mungkin terjadi dimulai sistim pengaman berusaha untuk mengisolasi (supaya tidak menyebar ke seluruh jaringan) dan memutuskan ke sekelompok beban dari jaringan, dengan demikian, dampak nya pada sistim daya nampak sebagai hilangnya beban dari jaringan. Karena generasi daya total adalah sekitar 6 MW beban puncak dan 3.8MW beban rendah, ukuran dipilih untuk mewakili hilangnya beban 400kW, yaitu ukuran rata-rata diesel gen-set di Sumba Timur. DIgSILENT hanya memungkinkan untuk mewujutkan kehilangan beban dalam prosentase dari beban total, bukannya kehilangan beban sebesar 400kW tepat, Tabel di bawah ini berisi daftar skenario kehilangan beban yang dipakai dalam analisa.

Table H-13. Skenario Beban Hilang

Bus	Scenario	High Load (MW)	Low Load (MW)
Haharu	Sebelum Gangguan	0.104	0.069
	Setelah Gangguan	0	0
	Prosentase hilang (100 %)	0.104	0.069
Kambajawa	Sebelum Gangguan	3.494	2.085
	Setelah Gangguan	2.981	1.776
	Prosentase hilang (15 %)	0.513	0.309
Waingapu	Sebelum Gangguan	2.084	1.782
	Setelah Gangguan	1.676	1.434
	Prosentase hilang (20 %)	0.408	0.348

3.2.3 Hilangnya Sebagian Pembangkitan Daya

Dalam skenario ini, diasumsikan bahwa hilangnya pembangkitan daya setara dengan pemutusan generator diesel tunggal dari jaringan, dan ukuran khas generator diesel di Sumba Timur adalah 400kW. Dengan demikian, pemutusan generator dari jaringan dipilih untuk memiliki kapasitas

This report is available at no cost from the National Renewable Energy Laboratory (NREL) at www.nrel.gov/publications.

sebesar 400kW. Di Kambajawa dan Waingapu, pembangkitan daya di wakilih oleh dua generator yaitu, satu generator mewakili kelompok generator yang akan tetap terhubung selama dan setelah gangguan, sedangkan generator kedua (400kW) merupakan generator yang akan terputus selama gangguan.

3.3 Batasan Tegangan dan Trekuensi Dalam Studi Ini.

PLN memberikan batas normal untuk tegangan dan frekuensi di jaringan Sumba Timur; batas lainnya didasarkan atas praktek yang digunakan dibanyak tempat. Berikut ini adalah batas yang digunakan untuk penelitian ini:

- Batas tegangan operasi didefinisikan pada ± 10% dari tegangan nominal.
- Batas-batas operasi frekuensi untuk semua komponen grid didefinisikan antara 0,97-1,03 pu
- Batas-batas operasi tegangan rendah untuk turbin angin yang didefinisikan pada 0,9 pu selama 60 second (detik) dan 0,85 p.u. selama 11 second (detik).
- Batas-batas operasi tegangan tinggi untuk turbin angin yang didefinisikan pada 1.1 pu selama 60 s, 1,15 p.u. untuk 2 s dan 1,2 p.u. untuk 80 ms.
- Batas-batas operasi frekuensi rendah dan tinggi untuk turbin angin didefinisikan sebagai 47 Hz dan 53 Hz untuk 200 ms.
- Batas-batas operasi tegangan untuk pembangkit diesel didefinisikan antara 0,9-1,1 pu
- Batas-batas operasi frekuensi untuk pembangkit diesel didefinisikan antara 47-53 Hz untuk 200 ms.
- Prioritas yang lebih tinggi diberikan untuk PLTB melebihi pembangkitan dari diesel setiap saat tenaga angin tersedia. Untuk semua skenario diselidiki, tidak ada satupun situasi yang tidak dapat diterima.

3.4 Skenario untuk Mengintegrasikan Satu PLTB Berdaya 850-kW

Ringkasan analisis transien dari skenario dan kinerja yang diamati untuk jaringan diberikan di Tabel H-14. Angka-angka ini terkandung dalam Lampiran E. Kasus kasus yang dianggap penting di tulis dengan huruf tebal dan digarisbawahi sesuai dengan macam ketidakstabilan; jenis ketidakstabilan dijelaskan dalam kolom pengamatan.

Table H-14. Skenario and pengamatan untuk analisa dinamis dengan satu PLTB

Kasus #	Tipe dari Gangguan	Tampilan #	Pengamatan
Gangguan tiga fasa ke tanah pada bus Haharu. Gangguan terjadi pada 1 detik & dan dihilangkan pada 1.18 detik.			
1	Tanpa Angin Beban Tinggi	Figure E-1, E-2	Sistem stabil; pembebanan penyulang dalam batas normal. Pembebanan penyulang dalam batasan normal. Tegangan di bus turun sampai sekitar 0.65 pu.

This report is available at no cost from the National Renewable Energy Laboratory (NREL) at www.nrel.gov/publications.

Kasus #	Tipe dari Gangguan	Tampilan #	Pengamatan
			Frekwensi turun sampai 0.97 p.u. dan kembali pada 12 detik.
1	Tanpa Angin Beban Rendah	Figure E-3, E-4	Sistem stabil. Pembebanan penyulang dalam batasan normal. Tegangan di bus turun sampai sekitar 0.625 pu. dan kembali dalam 0.18 detik.
3	Angin Tinggi Beban Tinggi	Figure E-5, E-6, dan E-7	Sistem stabil Pembebanan penyulang dalam batas normal. Frekuensi turun mencapai 0.965pu dan pulih kembali dalam waktu sekitar 2.5 detik. Tegangan di bus turun sampai sekitar 0.6 pu di bus K dan W. Tegangan terminal dan daya output dari semua generator semuanya stabil
4	Angin Tinggi Beban Rendah	Figure E-8, E-9, dan E-10	Sistem stabil Pembebanan penyulang dalam batas normal. Frekuensi turun mencapai 0.96pu dan pulih kembali dalam waktu sekitar 2 detik. Tegangan di bus turun sampai sekitar 0.45 pu di bus K dan W. Tegangan terminal dan daya output dari semua generator semuanya stabil
Gangguan tiga fasa ke tanah pada bus Kambajawa. Gangguan terjadi pada 1 detik dan dihilangkan pada 1.18 detik.			
5	Tanpa Angin Beban Tinggi	Figures E-11, E-12	Sistem stabil Pembebanan penyulang dalam batas normal. Tegangan terminal di generator turun dibawah 0.3 p.u. selama gangguan. Tegangan di bus Haharu dang Waingapu turun dibawah 0.1 pu.selama gangguan. Tegangan kembali segera sesudah gangguan dihilangkan
6	Tanpa Angin Beban Rendah	Figure E-13	Sistem stabil Pembebanan penyulang dalam batas normal. Tegangan terminal di generator turun dibawah 0.3 p.u. selama gangguan.

This report is available at no cost from the National Renewable Energy Laboratory (NREL) at www.nrel.gov/publications.

Kasus #	Tipe dari Gangguan	Tampilan #	Pengamatan
			Tegangan di bus Haharu dang Waingapu turun dibawah 0.1 pu.selama gangguan. Tegangan kembali segera sesudah gangguan dihilangkan
7	Angin Tinggi Beban Tinggi	Figures E-14, E-15	Sistem stabil Pembebanan penyulang dalam batas normal. Frekwensi jatuh sampai 0.99 p.u. dand kembali dalam waktu 2.5 detik. Tegangan di bus K dan W turun di bawah 0.1 pu. Tegangan terminal dan daya output dari semua generator semuanya stabil
8	Angin Tinggi Beban Rendah	Figure E-16 dan E-17	Sistem stabil. Pembebanan penyulang dalam batas normal. Frekuensi turun sampai 0.99 pu dan pulih dalam waktu sekitar 8 detik. Tegangan jatuh di bawah 0.2 pu di bus K dan bus W. Tegangan dan daya output generator stabil.
Gangguan tiga fasa ke tanah pada bus Waingapu. Gangguan terjadi pada 1 detik & dan dihilangkan pada 1.18 detik.			
9	Tanpa Angin Beban Tinggi	Figure E-18, E-19	Tegangan pada terminal generator turun di bawah 0.1pu selama gangguan, Tegangan bus di Haharu dan Kambajawa turun sampai di bawah 0.2 pu selama gangguan. Tegangan segera pulih kembali setelah gangguan dihilangkan
10	Tanpa Angin Beban Rendah	Figure E-20	Tegangan di terminal generator jatuh di bawah 0.1pu selama gangguang. Tegangan di bus Haharu dan Kambajawa jatuh dibawah 0.2 p.u. selama gangguan. Tegangan segera kembali sesudah gangguan dihilangkan.
11	Angin Tinggi Beban Tinggi	Figure E-21 and E-22	Tegangan pada terminal generator turun di bawah 0.3pu selama gangguan Tegangan bus di Haharu dan Kambajawa turun sampai di bawah 0.2 pu selama gangguan. Tegangan segera pulih kembali

This report is available at no cost from the National Renewable Energy Laboratory (NREL) at www.nrel.gov/publications.

Kasus #	Tipe dari Gangguan	Tampilan #	Pengamatan
			setelah gangguan dihilangkan
12	Angin Tinggi Beban Rendah	Figure E-23 and E-24	Tegangan di terminal generator turun di bawah 0.3pu selama gangguan. Tegangan di bus Haharu dan Kambajawa turun dibawah 0.2 p.u. selama gangguan. Tegangan segera kembali sesudah gangguan dihilangkan.
Gangguan pada PLTB. Gangguan terjadi pada 1 detik dan dihilangkan pada 1.18 detik			
13	Angin Tinggi Beban Tinggi	Figure E-25, E-26 and E-27	Sistim stabil Pembebanan penyulang, tegangan dan frekwensi jaringan berada dalam batasan normal. Tegangan transien pada bus Haharu dan PLTB output transien sesudah gangguan di hilangkan.
14	Angin Tinggi Beban Rendah	Figure E-28 and E-29	Sistim stabil. Pembebanan penyulang, tegangan dalam batasan normal. Tegangan transien pada bus Haharu dan PLTB daya transient nampak setelah gangguan dihilangkan.
Gangguan pada PLTB. Gangguan terjadi pada 1 detik dan tidak dihilangkan (PLTB tidak disambung kembali)..			
15	Angin Tinggi Beban Tinggi	Figure E-30, E-31 and E-32	Dalam kasus ini terlihat hilangnya sinkronisasi. Ini dapat terjadi karena menghilangnya daya PLTB sebesar 850kW dari jaringan. Storage bila dipasang dengan PLTB dapat menyediakan daya sementara sampai adanya tambahan daya dari diesel genset tambahan untuk mengganti kehilangan daya yang besar.
16	Angin Tinggi Beban Rendah	Figure E-33 and E-34	Dalam kasus ini terlihat hilangnya sinkronisasi. Ini dapat terjadi karena menghilangnya daya PLTB sebesar 850kW dari jaringan. Storage bila dipasang dengan PLTB dapat menyediakan daya sementara sampai adanya tambahan daya dari diesel genset tambahan untuk mengganti kehilangan daya yang besar.
Gangguan pada sebagian generator di bus Kambajawa. Gangguan terjadi pada 1 detik, dan dihilangkan pada 1.18 detik.			

This report is available at no cost from the National Renewable Energy Laboratory (NREL) at www.nrel.gov/publications.

Kasus #	Tipe dari Gangguan	Tampilan #	Pengamatan
17	Tanpa Angin Beban Tinggi	Figure E-35 and E-36	Sistim stabil Pembebanan penyulang, tegangan berada dalam batasan normal.
18	Tanpa Angin Beban Rendah	Figure E-37	Sistim stabil Pembebanan penyulang, tegangan berada dalam batasan normal. Setelah gangguan, frekwensi mencapai 1.015p.u dan 0.985 p.u. sedikit diluar batasan normal.
19	Angin Tinggi Beban Tinggi	Figure E-38 and E-39	Sistim stabil Pembebanan penyulang, tegangan berada dalam batasan normal. Setelah gangguan, frekwensi mencapai 1.015p.u dan 0.985 p.u. sedikit diluar batasan normal.
20	Angin Tinggi Beban Rendah	Figure E-40 and E-41	Sistim stabil Pembebanan penyulang, tegangan berada dalam batasan normal. Setelah gangguan, frekwensi mencapai 1.015p.u dan 0.985 p.u. sedikit diluar batasan normal.
Gangguan pada sebagian generator di bus Kambajawa. Gangguan terjadi pada 1 detik, dan tidak dihilangkan			
21	Tanpa Angin Beban Tinggi	Figure E-42 dan E-43	Sistem tidak stabil. Sesudah gangguan terjadi, frekwensi terus turun, dan frekwensi tak terkendalikan.
22	Tanpa Angin Beban Rendah	Figure E-44	Sistem tidak stabil. Sesudah gangguan terjadi, frekwensi terus turun, dan frekwensi tak terkendalikan. Tegangan pada bus dan terminal generator juga terus menurun.
23	Angin Tinggi Beban Tinggi	Figure E-45 and E-46	Sistem tidak stabil. Sesudah gangguan terjadi, frekwensi terus turun, dan frekwensi tak terkendalikan.
24	Angin Tinggi Beban Rendah	Figure E-47 and E-48	Sistem tidak stabil. Sesudah gangguan terjadi, frekwensi terus turun, dan frekwensi tak terkendalikan. Tegangan pada bus dan terminal generator juga terus menurun.
Gangguan pada sebagian generator di bus Waingapu. Gangguan terjadi pada 1 detik, dan dihilangkan pada 1.18 detik.			

This report is available at no cost from the National Renewable Energy Laboratory (NREL) at www.nrel.gov/publications.

Kasus #	Tipe dari Gangguan	Tampilan #	Pengamatan
25	Tanpa Angin Beban Tinggi	Figure E-49 and E-50	Sistim stabil. Pembebanan penyulang dan tegangan pada bus ada dalam batasan normal.
26	Angin Tinggi Beban Tinggi	Figure E-51 and E-52	Sistim stabil. Pembebanan penyulang dan tegangan pada bus ada dalam batasan normal. Selama gangguan, frekwensi keluar dari batasan 1% dua kali, tapi akhirnya kembali 1 detik sesudah gangguan.
Gangguan pada sebagian generator di bus Waingapu. Gangguan terjadi pada 1 detik, dan gangguan tidak dihilangkan.			
27	Tanpa Angin Beban Tinggi	Figure E-53, and E-54	Sistim tidak stabil. Setelah gangguan, frekwensi terus jatuh, dan frekwensi tak terkendalikan. Dalam kasus ini tidak cukup daya cadangan tersedia pada generator yang jalan.
28	Angin Tinggi Beban Tinggi	Figure E-55 and E-56	Sistim tidak stabil. Setelah gangguan, frekwensi terus jatuh, dan frekwensi tak terkendalikan. Dalam kasus ini tidak cukup daya cadangan tersedia pada generator yang jalan.
Hilangnya beban di bus Haharu. Gangguan terjadi pada 1 detik dan beban disambung kembali pada 1.18 detik			
29	Tanpa Angin Beban Tinggi	Figure E-57 and E-58	Sistim stabil Pembebanan penyulang, tegangan, dan frekuensi berada dalam batas normal.
30	Tanpa Angin Beban Rendah	Figure E-59	Sistim stabil Pembebanan penyulang, tegangan, dan frekuensi berada dalam batas normal.
31	Angin Tinggi Beban Tinggi	Figure E-60 and E-61	Sistim stabil Pembebanan penyulang, tegangan, dan frekuensi berada dalam batas normal.
32	Angin Tinggi Beban Rendah	Figure E-62 and E-63	Sistim stabil Pembebanan penyulang, tegangan, dan frekuensi berada dalam batas normal.
Hilangnya beban di bus Haharu. Gangguan terjadi pada 1 detik dan beban tidak disambung kembali			
33	Tanpa Angin Beban Tinggi	Figure E-64	Sistim stabil

This report is available at no cost from the National Renewable Energy Laboratory (NREL) at www.nrel.gov/publications.

Kasus #	Tipe dari Gangguan	Tampilan #	Pengamatan
		and E-65	Pembebanan penyulang, tegangan, dan frekuensi berada dalam batas normal.
34	Tanpa Angin Beban Rendah	Figure E-66	Sistim stabil Pembebanan penyulang, tegangan, dan frekuensi berada dalam batas normal.
35	Angin Tinggi Beban Tinggi	Figure E-67 and E-68	Sistim stabil Pembebanan penyulang, tegangan, dan frekuensi berada dalam batas normal.
36	Angin Tinggi Beban Rendah	Figure E-69 and E-70	Sistim stabil Pembebanan penyulang, tegangan, dan frekuensi berada dalam batas normal.
Hilangnya beban di bus Kambajawa. Gangguan terjadi pada 1 detik dan beban disambung kembali pada 1.18 detik			
37	Tanpa Angin Beban Tinggi	Figure E-71 and E-72	Sistim stabil Pembebanan penyulang, tegangan, dan frekuensi berada dalam batas normal.
38	Tanpa Angin Beban Rendah	Figure E-73	Sistim stabil Pembebanan penyulang, tegangan, dan frekuensi berada dalam batas normal.
39	Angin Tinggi Beban Tinggi	Figure E-74 and E-75	Sistim stabil Pembebanan penyulang, tegangan, dan frekuensi berada dalam batas normal.
40	Angin Tinggi Beban Rendah	Figure E-76 and E-77	Sistim stabil Pembebanan penyulang, tegangan, dan frekuensi berada dalam batas normal.
Hilangnya beban di bus Kambajawa. Gangguan terjadi pada 1 detik dan beban tidak disambung kembali.			
41	Tanpa Angin Beban Tinggi	Figure E-78 and E-79	Sistim stabil Pembebanan penyulang, tegangan, dan frekuensi berada dalam batas normal.
42	Tanpa Angin Beban Rendah	Figure E-80	Sistim stabil Pembebanan penyulang, tegangan, dan frekuensi berada dalam batas normal.
43	Angin Tinggi Beban Tinggi	Figure E-81	Sistim stabil

This report is available at no cost from the National Renewable Energy Laboratory (NREL) at www.nrel.gov/publications.

Kasus #	Tipe dari Gangguan	Tampilan #	Pengamatan
		and E-82	Pembebanan penyulang, tegangan, dan frekuensi berada dalam batas normal.
44	Angin Tinggi Beban Rendah	Figure E-83 and E-84	Sistim stabil Pembebanan penyulang, tegangan, dan frekuensi berada dalam batas normal.
Hilangnya beban di bus Waingapu. Gangguan terjadi pada 1 detik dan beban disambung kembali pada 1.18 detik			
45	Tanpa Angin Beban Tinggi	Figure E-85 and E-86	Sistim stabil Pembebanan penyulang, tegangan, dan frekuensi berada dalam batas normal.
46	Tanpa Angin Beban Rendah	Figure E-87	Sistim stabil Pembebanan penyulang, tegangan, dan frekuensi berada dalam batas normal.
47	Angin Tinggi Beban Tinggi	Figure E-88 and E-89	Sistim stabil Pembebanan penyulang, tegangan, dan frekuensi berada dalam batas normal.
48	Angin Tinggi Beban Rendah	Figure E-90 and E-91	Sistim stabil Pembebanan penyulang, tegangan, dan frekuensi berada dalam batas normal.
Hilangnya beban di bus Waingapu. Gangguan terjadi pada 1 detik dan beban tidak disambung kembali.			
49	Tanpa Angin Beban Tinggi	Figure E-92 and E-93	Sistim stabil Pembebanan penyulang, tegangan, dan frekuensi berada dalam batas normal.
50	Tanpa Angin Beban Rendah	Figure E-94	Sistim stabil Pembebanan penyulang, tegangan, dan frekuensi berada dalam batas normal.
51	Angin Tinggi Beban Tinggi	Figure E-95 and E-96	Sistim stabil Pembebanan penyulang, tegangan, dan frekuensi berada dalam batas normal.
52	Angin Tinggi Beban Rendah	Figure E-97 and E-98	Sistim stabil Pembebanan penyulang, tegangan, dan frekuensi berada dalam batas normal.
Short-circuit pada penyulang Kambajawa-Haharu. Gangguan terjadi pada 1 second, dan			

This report is available at no cost from the National Renewable Energy Laboratory (NREL) at www.nrel.gov/publications.

Kasus #	Tipe dari Gangguan	Tampilan #	Pengamatan
dihilangkan dalam 180 msecond.			
53	Tanpa Angin Beban Tinggi	Figure E-99 and E-100	Terjadi islanding (terlepas dari jaringan) di Haharu; beban di Haharu dilepas selama 180 ms. Sesudah gangguang dihilangkan, sistim daya stabil Frekwensi jatuh sampai 0.97 p.u., diluar batas normal, selama 4 detik, dan kemudian kembali ke normal.
54	Tanpa Angin Beban Rendah	Figure E-101	Terjadi islanding (terlepas dari jaringan) di Haharu; beban di Haharu dilepas selama 180 ms. Sesudah gangguang dihilangkan, sistim daya stabil Frekwensi jatuh sampai 0.97 p.u., diluar batas normal, selama 4 detik, dan kemudian kembali ke normal.
55	Angin Tinggi Beban Tinggi	Figure E-102 and E-103	Terjadi islanding (terlepas dari jaringan) di Haharu; beban di Haharu dilepas selama 180 ms. Sesudah gangguang dihilangkan, sistim daya stabil Frekwensi jatuh sampai 0.97 p.u., diluar batas normal, selama 4 detik, dan kemudian kembali ke normal. PLTB tetap terhubung ke jaringan.
56	Angin Tinggi Beban Rendah	Figure E-104 and E-105	Terjadi islanding (terlepas dari jaringan) di Haharu; beban di Haharu dilepas selama 180 ms. Sesudah gangguang dihilangkan, sistim daya stabil Frekwensi jatuh sampai 0.97 p.u., diluar batas normal, selama 4 detik, dan kemudian kembali ke normal. PLTB tetap terhubung ke jaringan.
Short-circuit pada penyulang Kambajawa-Haharu. Gangguan terjadi pada 1 second, dan tidak dihilangkan.			
57	Tanpa Angin Beban Tinggi	Figure E-106 and E-107	Relay tidak di model, jadi gangguan short circuit bertahan pada saluran penyulang menyebabkan hlangnya sinkronisasi
58	Tanpa Angin Beban Rendah	Figure E-108	Relay tidak di model, jadi gangguan short circuit bertahan pada saluran penyulang menyebabkan hlangnya sinkronisasi
59	Angin Tinggi Beban Tinggi	Figure E-109	Relay tidak di model, jadi gangguan

This report is available at no cost from the National Renewable Energy Laboratory (NREL) at www.nrel.gov/publications.

Kasus #	Tipe dari Gangguan	Tampilan #	Pengamatan
		and E-110	short circuit bertahan pada saluran penyulang menyebabkan hlangnya sinkronisasi
60	Angin Tinggi Beban Rendah	Figure E-111 and E-112	Relay tidak di model, jadi gangguan short circuit bertahan pada saluran penyulang menyebabkan hlangnya sinkronisasi
Gangguan short circuit pada penyulang antara Kambajawa-Waingapu. Gangguan terjadi pada 1 detik dan dihilangkan dalam waktu 180 msecond			
61	Tanpa Angin Beban Tinggi	Figure E-113 and E-114	Terjadi islanding di Waingapu Sesudah gangguan dihilankgan, sistim stabil. Pembebanan penyulang, tegangan, dan frekwensi berada dalam batasan normal.
62	Tanpa Angin Beban Rendah	Figure E-115	Terjadi islanding di Waingapu Sesudah gangguan dihilankgan, sistim stabil. Pembebanan penyulang, tegangan, dan frekwensi berada dalam batasan normal.
63	Angin Tinggi Beban Tinggi	Figure E-116 and E-117	Terjadi islanding di Waingapu Sesudah gangguan dihilankgan, sistim stabil. Pembebanan penyulang, tegangan, dan frekwensi berada dalam batasan normal.
64	Angin Tinggi Beban Rendah	Figure E-118 and E-119	Terjadi islanding di Waingapu Sesudah gangguan dihilankgan, sistim stabil. Pembebanan penyulang, tegangan, dan frekwensi berada dalam batasan normal.
Gangguan short circuit pada penyulang antara Kambajawa-Waingapu. Gangguan terjadi pada 1 detik dan tidak dihilankan.			
65	Tanpa Angin Beban Tinggi	Figure E-120 and E-121	Relay tidak dimodel, jadi gangguan short circuit pada jaringan penyulang menyebabkan sistim daya kehilangan sinkronisasi
66	Tanpa Angin Beban Rendah	Figure E-122	Relay tidak dimodel, jadi gangguan short circuit pada jaringan penyulang menyebabkan sistim daya kehilangan sinkronisasi
67	Angin Tinggi Beban Tinggi	Figure E-123 and E-124	Relay tidak dimodel, jadi gangguan short circuit pada jaringan penyulang menyebabkan sistim daya kehilangan

This report is available at no cost from the National Renewable Energy Laboratory (NREL) at www.nrel.gov/publications.

Kasus #	Tipe dari Gangguan	Tampilan #	Pengamatan
			sinkronisasi
68	Angin Tinggi Beban Rendah	Figure E-125 and E-126	Relay tidak dimodel, jadi gangguan short circuit pada jaringan penyulang menyebabkan sistim daya kehilangan sinkronisasi

Gambar-gambar yang disebut dalam table diatas ada di Appendix E.

3.5 Analisa Sistim dengan Tambaban Energy Storage

Penelitian ini meliputi analisa energy storage sebagai metode untuk menghindari ketidakstabilan sistem di Sumba Timur yang dapat terjadi dengan pemasangan 850kW PLTB. Energy storage Power Store dari ABB dipakai dalam analisa ini. Model untuk controller dari ABB untuk energy storage juga dipakai disini. Energy storage ini dimodel sebagai sumber arus (current source), dan arus aktiv (I_R) dan arus reaktiv (I_I) dapat di atur secara langsung dan independen. Pengatur daya aktiv-frekwensi (P-f), dan pengatur daya reaktiv-tegangan (Q-V) memakai frekwensi jaringan dan tegangan terminal untuk mengatur arus daya aktiv dan arus daya reaktiv. Pengatur daya aktiv-frekwensi dapat dipakai untuk menyediakan daya pembantu inersia (inertial support) dan dapat dipakai mengatur droop dari pembangkit daya. Dua macam energy storage tersedia dari PowerStore buatan ABB: Flywheel dan Li-ion Battery.

Sebagai catatan, bahkan sebelum adanya PLTB di jaringan, banyak terjadi pemadaman seperti tercatat dalam laporan gangguan (yang disediakan oleh PLN) untuk tahun 2014, yang menunjukkan bahwa jumlah pemadaman dan pemadaman listrik sangatlah tinggi (sekitar satu per hari). Analisa awal menunjukkan alasan-alasan berikut: (1) Short circuit yang tidak dibetulkan dalam batas waktu yang sudah ditentukan pada jaringan pemutus, (2) Generator yang dijalankan mendekati kapasitas daya mampu (cadangan daya sangat rendah), (3) Kurangnya pemangkasan tumbuh tumbuhan yang dapat menyebabkan short circuit pada jalur penyulang, dan (4) banyaknya diesel generator terpasang yang sudah termasuk tua umurnya. Perbaikan terhadap (1) sampai (4) ditambah dengan pemasangan energy storage akan mengurangi jumlah pemadaman dan pemutusan listrik, sehingga dapat meningkatkan keandalan jaringan system daya,

Untuk analisa dinamis dengan energy storage anggapan berikut ini dipakai dalam analisa:

- 550kW CAT C32 diesel generator di Waingapu tersedia sebagai generator cadangan dilengkapi dengan saklar autostart. Satu atau beberapa generator semacam ini akan dibutuhkan.
- Adanya supervisory control yang memonitor gangguan, dan suatu daftar standar gangguan yang mungkin terjadi (parameter sistem), supervisory control ini akan mengirimkan sinyal autostart ke generator cadangan di atas.
- Generator cadangan memiliki kemampuan auto-start dalam 10 detik, yang berarti akan mampu untuk memulai, sinkronisasi dengan grid, dan memberikan daya penuh dalam waktu 10 detik.

Manfaat utama energy storage yang dianalisa dalam skenario ini adalah untuk memenuhi daya sementara antara terjadinya gangguan dan awal pembangkitan daya oleh generator cadangan.

This report is available at no cost from the National Renewable Energy Laboratory (NREL) at www.nrel.gov/publications.

Manfaat lainnya dari energy storage jangka pendek ini adalah untuk meratakan variabilitas daya angin dan meratakan beban pada generator diesel selama daya yang dibangkitkan oleh PLTB naik dan turun. Untuk 850kW PLTB di Sumba Timur, kelompok generator diesel yang sekarang terpasang (dengan inersia, AVR dan Governor model yang di simulasi) akan mampu mengatasi variabilitas kecepatan angin dan mencukupi kebutuhan naik turunnya kecepatan angin (ramping requirement sperti yang di berikan pada Appendix E- Figures 127-136). Namun, harus dicatat bahwa usia kebanyakan generator yang sekarang terpasang menunjukkan bahwa variabilitas tambahan diluar variasi daya beban yang normal akan membutuhkan pemeliharaan (terjadwal maupun tidak) yang lebih sering. Jadi, tambahan energy storage akan memperbaiki keandalan dan ketahanan sistim jaringan terhadap gangguan.

Tabel 15 berisi hasil studi stabilitas untuk berbagai skenario setelah penambahan energy storage. Analisa ini dilakukan oleh kantor konsultan ABB di Madrid, Spanyol. Laporan lengkap dilampirkan sebagai Lampiran F.

Untuk menentukan ukuran yang optimal dari energy storage, informasi berikut digunakan: (1) jumlah daya yang diperlukan untuk mengganti hilangnya daya jika terjadi gangguan besar dalam sistem dan putaran inersia yang tersedia dalam sistem, dan (2) waktu yang dibutuhkan sampai generator cadangan dapat masuk ke jaringan dan memenuhi kebutuhan daya. Ilustrasi berikut adalah untuk satu PLTB berdaya 850-kW. Proses yang sama dapat dilakukan untuk pemasangan dua PLTB masing-masing berdaya 850-kW.

1. Gangguan kritis yang dipakai dalam penelitian ini adalah hilangnya daya dari PLTB (850 kW). Daya cadangan yang harus disediakan dari generator untuk skenario beban tinggi dan rendah masing-masing adalah 597,8 kW dan 377,3 kW. Jadi, ada kekurangan daya sebesar 252,1 kW dan 472 kW di skenario beban tinggi dan beban rendah, yang harus disediakan oleh energy storage untuk menstabilkan sistem. Oleh karena itu, energy storage dengan kapasitas daya 500 kW yang dipilih.

2. Untuk menentukan berapa lama energy storage diperlukan untuk memenuhi kekurangan daya ini, waktu start-up dari generator cadangan perlu diperhitungkan. Sebagaimana ditunjukkan, generator cadangan dengan waktu start-up 10 detik dipilih dalam penelitian ini. Karena generator ini berusia 15 tahun, waktu start-up diperpanjang menjadi 30 detik, yang termasuk waktu untuk start-up, sinkronisasi, dan kenaikan daya sampai dengan kapasitas penuh. Kapasitas energi dari energy storage adalah

   500 kW x (30/3600) jam = 4.17 kWh

Ukuran energy storage yang dibutuhkan untuk mengintegrasikan dua PLTB masing-masing berdaya 850 kW di bus Haharu di jaringan Sumba Timur dapat di perinci sebagai berikut:

1. Gangguan kritis yang dipakai dalam penelitian ini adalah hilangnya daya dari kedua PLTB (1700-kW). Berdasarkan daya cadangan yang harus disediakan oleh generator dan ukuran energy storage yang tersedia adalah 500kW/unit, total energy storage yang dipakai dalam penelistian ini adalah 1500-kW.

This report is available at no cost from the National Renewable Energy Laboratory (NREL) at www.nrel.gov/publications.

2. Untuk menentukan berapa lama energy storage diperlukan untuk memenuhi kekurangan daya ini, generator cadangan dengan waktu start-up 10 detik dibantu oleh generator cadangan yang lain dengan kemampuan start-up 60 detik. Berdasarkan situasi ini, energy storage harus memiliki energy untuk selama 60 detik:

   1500 kW x (60/3600) jam = 25 kWh

Karena itu, energy storage dengan kapasitas daya dan energi dari 500 kW dan 4.17 kWh, dibutuhkan untuk kasus mengintegrasikan satu PLTB (850-kW) dan 1.500 kW dan 25 kWh, untuk kasus mengintegrasikan dua PLTB (masing-masing 850-kW). Pemilihan energy storage (flywheel atau baterai teknologi-lithium-ion [Li-ion], lead acid, atau kimia lainnya) dan spesifikasi rinci dan ukuran energy storage tidak termasuk dalam proyek ini. Daya penuh yang ditentukan diatas adalah persyaratan untuk energy storage; Namun, energy storage yang tersedia secara komersial antara 500 kW dan 1.500 kW akan memiliki kandungan energi (kWh) yang jauh lebih besar. Sebagai contoh, Beacon Flywheel 500 kW memiliki kandungan energi dari 50 kWh, sebuah SAFT IM20P Li-ion 500-kW baterai memiliki kandungan energi sekitar 160 kWh, Beacon Flywheel 1.500 kW memiliki kandungan energi dari 150 kWh, dan SAFT IM20P baterai Li-ion 1500-kW memiliki kandungan energi sekitar 500 kWh.

This report is available at no cost from the National Renewable Energy Laboratory (NREL) at www.nrel.gov/publications.

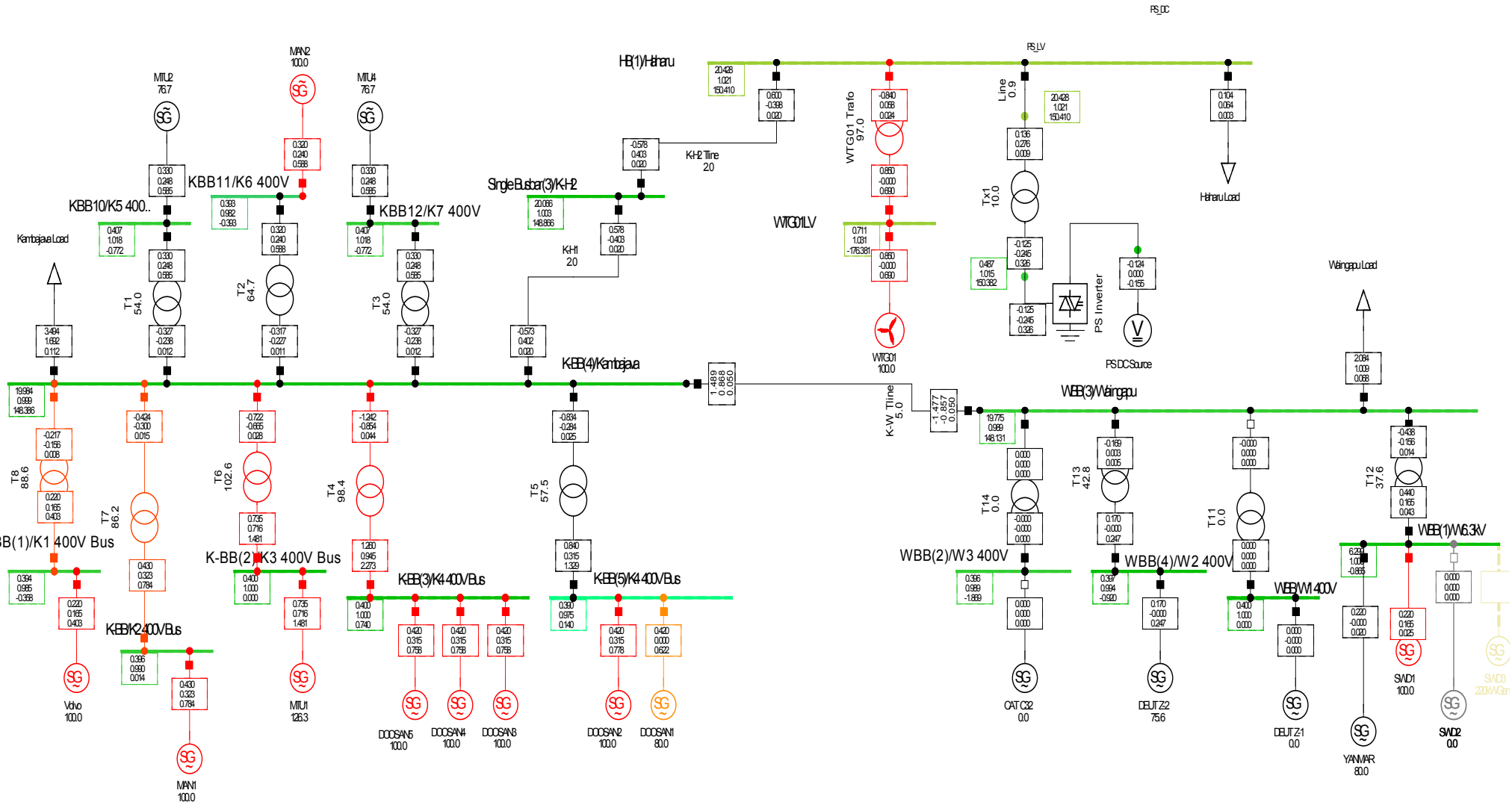

Figure H-9. Power flow display: high load with WTGs and PowerStore. MTU1 = slack bus

This report is available at no cost from the National Renewable Energy Laboratory (NREL) at www.nrel.gov/publications.

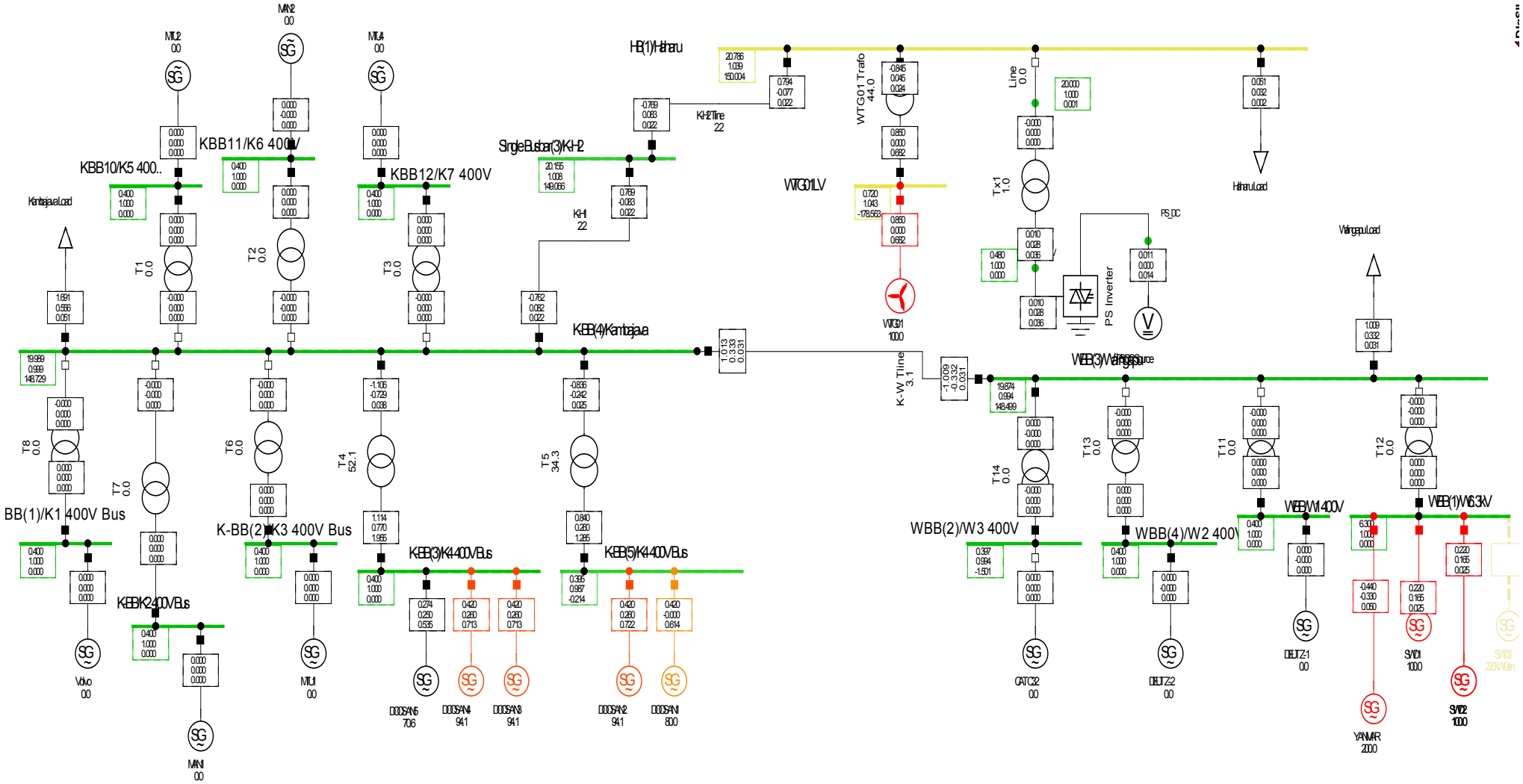

Figure 10. Power flow display: low load with WTGs and PowerStore. DOOSAN 5 = slack bus

This report is available at no cost from the National Renewable Energy Laboratory (NREL) at www.nrel.gov/publications.

Gambar-gambar yang disebut dalam table ini ada di Appendix F. Studi sistim dinamis dilakukan oleh ABB.

Table 15. Skenario and pengamatan untuk analisa dinamis dengan energy storage (ABB powerstore™).

Kasus #	Tipe dari Gangguan	Tampilan #	Pengamatan
Hilangnya pembangkitan daya dari Diesel Generator (650 kW)			
1	Angin Tinggi Beban Tinggi	Figure 4 (Appendix F)	Peralatan pendukung stabilitas membangkitkan daya (400 kW) selama 10 detik sampai generator CAT C32 mulai membangkitkan daya dan menstabilkan sistem. Frekuensi dan tegangan turun, tetapi stabil dan dalam batas normal. Untuk kasus ini, sistem stabil.
2	Angin Tinggi Beban Rendah	Figure 7 (Appendix F)	Peralatan pendukung stabilitas membangkitkan daya (400 kW) selama10 detik sampai generator CAT C32 mulai membangkitkan daya dan menstabilkan sistem. Frekuensi dan tegangan turun, tetapi stabil dan dalam batas normal. Untuk kasus ini, sistem stabil. Tanpa adanya peralatan pendukung stabilitas, sistim tidak bisa bertahan terhadap gangguan semacam ini karena frekuensi jaringan jatuh secara tajam sehingga PLTB juga terlepas dari jaringan dan tidak cukup waktu untuk menghubungkan generator cadangan ke jaringan.
Hilangnya beban			
3	Angin Tinggi Beban Tinggi	Figure 5 (Appendix F)	Hilangnya beban terbesar (3.494 kW) dari jaringan disimulasikan, segera peralatan pendukung stabilitas menyerap daya (200 kW) untuk 10 detik dan menstabilkan sistem. Jadi sistemnya stabil untuk kasus ini. Penggunaan peralatan dukungan stabilitas bukanlah factor penentu stabilitas system dalam kasus ini karena generator yang lain dengan cepat menyesuaikan titik operasi nya untuk mengadaptasi situasi.
4	Angin Tinggi Beban Rendah	Figure 8 (Appendix F)	Hilangnya beban terbesar (1.691 kW) dari jaringan disimulasikan. Dengan segera peralatan pendukung stabilitas menyerap daya (330 kW) untuk 10 detik dan menstabilkan sistem. Jadi sistem stabil untuk kasus ini.

This report is available at no cost from the National Renewable Energy Laboratory (NREL) at www.nrel.gov/publications.

Kasus #	Tipe dari Gangguan	Tampilan #	Pengamatan
			Penggunaan peralatan pendukung stabilitas bukanlah factor penentu stabilitas system dalam kasus ini karena generator yang lain dengan cepat menyesuaikan titik operasi nya untuk mengadaptasi situasi.
Hilangnya pembangkitan daya PLTB (850 kW) dari jaringan (misalnya karena kecepatan angin menghilang)			
5	Angin Tinggi Beban Tinggi	Figure 6 (Appendix F)	Peralatan pendukung stabilitas daya (sebesar 400 kW) dapat memenuhi pembangkitan daya untuk 10 detik sampai generator cadangan memulai pembangkitan daya dan menstabilkan sistem. Tanpa menggunakan peralatan dukungan stabilitas daya, sistem ini tidak stabil karena frekuensi turun dengan tajam terutama jika generator cadangan tidak memiliki daya yang cukup untuk mengkompensasi hilangnya pembangkitan daya dan menstabilkan frekuensi sistem.
6	Angin Tinggi Beban Rendah	Figure 9 (Appendix F)	Peralatan pendukung stabilitas daya (500 kW) dapat menyediakan daya untuk 10 detik sampai generator cadangan mulai membangkitkan daya dan menstabilkan sistem. Tanpa menggunakan peralatan dukungan stabilitas, sistem ini tidak bisa stabil karena frekuensi turun dengan tajam sehingga generator cadangan tidak memiliki daya pembangkitan yang cukup untuk mengkompensasi hilangnya jaringan daya dan menstabilkan frekuensi sistem.
Variasi daya output dari PLTB			
7	Angin Tinggi Beban Tinggi	Figure E-127, E-128 and E-129	Variasi daya output dari PLTB menyebabkan output dari diesel genset ber variasi sebesar 5% untuk generator genset yang beroperasi pada daya mampu dan bervariasi 10% untuk generator yang beroperasi dibawah daya mampu. Perbedaan ini dipenuhi oleh energy storage. Frekwensi dan tegangan ber variasi dalam batasan normal. .
8	Angin Tinggi Beban Rendah	Figure E-130 and E-131	Variasi daya output dari PLTB menyebabkan output dari diesel genset ber variasi sebesar 2.5% (diesel genset ini beroperasi dengan

This report is available at no cost from the National Renewable Energy Laboratory (NREL) at www.nrel.gov/publications.

Kasus #	Tipe dari Gangguan	Tampilan #	Pengamatan
			daya mampu – tidak ada headroom lagi). Perbedaan ini dipenuhi oleh energy storage. Frekwensi dan tegangan ber variasi dalam batasan normal.
Turunnya daya secara perlahan (ramping down) output dari PLTB			
9	Angin Tinggi Beban Tinggi	Figure E-132, E-133 and E-134	Selama PLTB output menurun, Diesel genset yang mempunyai daya cadangan dan energy storage "Power Store" menaikkan daya secara bersamaan untuk menutup kekurangan daya.
10	Angin Tinggi Beban Rendah	Figure E-135 and E-136	Selama PLTB output menurun, Diesel genset yang mempunyai daya cadangan dan energy storage "Power Store" menaikkan daya secara bersamaan untuk menutup kekurangan daya. Sesudah 18 detik, diesel genset mencapai daya puncak, sesudah itu, Power Store memenuhi kekurangan daya.

Sistim dapat juga kehilangan stabilitas jika terjadi gangguan-gangguan berikut ini: short-circuit pada penyulang Kambajawa-Haharu tanpa upaya menghilangkan gangguan dari jaringan. Juga short-circuit pada penyulang antara Kambajawa-Waingapu dapat menyebabkan kehilangan stabilitas jaringan. Jika gangguan tidak dihilangkan dalam waktu 180 mili-detik, sistim akan kehilangan sinkronisme. Untuk mengatasi hal ini, relay sistim pengaman harus di program untuk mengisolasikan gangguan supaya tidak menyebar.

3.6 Skenario Untuk Mengintegrasikan Dua PLTB (Masing-masing Berdaya 850-kW)

Gambar gambar yang tercantum dalam Tabel H-16 ada di dalam Appendix G. Angka-angka yang tercantum dalam grafik-grafik di rincikan dibawah ini.

This report is available at no cost from the National Renewable Energy Laboratory (NREL) at www.nrel.gov/publications.

Table 1. Skenario and pengamatan untuk analisa dinamis Analisa Dampak Sistim untuk mengintegrasikan dua PLTB

Kasus #	Tipe dari Gangguan	Tampilan #	Pengamatan
Gangguan tiga fasa ketanah di bus Kambajawa. Gangguan terjadi pada 1 detik dan dihilangkan pada 1.18 detik.			
1	Angin Tinggi Beban Tinggi	Figure G-1, G-2 and G-3	Sistim stabil. Pembebanan penyulang ada dalam batasan normal. LVRT (low voltage ride through – ketahanan menghadapi tegangan rendah) dari PLTB menghindarkan PLTB terlepas dari jaringan. PLTB kembali normal segera sesudah gangguan dihilangkan.
2	Angin Tinggi Beban Rendah	Figure G-4 and G-5	Sistim stabil. Pembebanan penyulang ada dalam batasan normal. LVRT (low voltage ride through – ketahanan menghadapi tegangan rendah) dari PLTB menghindarkan PLTB terlepas dari jaringan. PLTB kembali normal segera sesudah gangguan dihilangkan.
3	Angin Tinggi Beban Tinggi dengan Energy Storage	Figure G-6 and G-7	Sistim stabil. Pembebanan penyulang ada dalam batasan normal. Tegangan di terminal dan daya output dari generator semuanya stabil Energy storage memenuhi daya selama gangguan.
4	Angin Tinggi Beban Rendah dengan Energy Storage	Figure G-8 and G-9	Sistim stabil. Pembebanan penyulang ada dalam batasan normal. Tegangan pada bus jatuh dibawah 0.50 p.u. di bus H dan W. Energy storage memenuhi daya selama gangguan ketika PLTB down.
Gangguan tiga fasa ketanah di bus Waingapu. Gangguan terjadi pada 1 detik dan dihilangkan pada 1.18 detik.			
5	Angin Tinggi Beban Tinggi	Figure G-10, G-11 and G-12	Sistim stabil. Pembebanan penyulang ada dalam batasan normal. LVRT (low voltage ride through – ketahanan menghadapi tegangan rendah) dari PLTB menghindarkan PLTB terlepas dari jaringan. PLTB kembali normal segera sesudah gangguan dihilangkan.

This report is available at no cost from the National Renewable Energy Laboratory (NREL) at www.nrel.gov/publications.

Kasus #	Tipe dari Gangguan	Tampilan #	Pengamatan
6	Angin Tinggi Beban Rendah	Figure G-13 and G-14	Sistim stabil. Pembebanan penyulang ada dalam batasan normal. LVRT (low voltage ride through – ketahanan menghadapi tegangan rendah) dari PLTB menghindarkan PLTB terlepas dari jaringan. PLTB kembali normal segera sesudah gangguan dihilangkan.
7	Angin Tinggi Beban Tinggi dengan Energy Storage	Figure G-15 and G-16	Sistim stabil. Pembebanan penyulang ada dalam batasan normal. Tegangan di terminal dan daya output dari generator semuanya stabil Energy storage memenuhi daya selama gangguan.
8	Angin Tinggi Beban Rendah dengan Energy Storage	Figure G-17 and G-18	Sistim stabil. Pembebanan penyulang ada dalam batasan normal. Tegangan pada bus jatuh dibawah 0.50 p.u. di bus H dan W. Energy storage memenuhi daya selama gangguan ketika PLTB down.
Gangguan pada kedua PLTB. Gangguan terjadi pada 1 detik, dan tidak dihilangkan.			
9	Angin Tinggi Beban Tinggi	Figure G-19, G-20 and G-21	Frekwensi terus menurun sesduah gangguan, dan terjadi kehilangan sinkronisasi. Ini memang diharapkan, karena hilangnya daya dari dua PLTB masing masing berdaya 850-kW tanpa adanya pengganti merupakan kehilangan daya yang besar dari jaringan. Sehingga jaringan daya tidak bisa kembali normal.
10	Angin Tinggi Beban Rendah	Figure G-22 and G-23	Frekwensi terus menurun sesduah gangguan, dan terjadi kehilangan sinkronisasi. Ini memang diharapkan, karena hilangnya daya dari dua PLTB masing masing berdaya 850-kW tanpa adanya pengganti merupakan kehilangan daya yang besar dari jaringan. Sehingga jaringan daya tidak bisa kembali normal.

This report is available at no cost from the National Renewable Energy Laboratory (NREL) at www.nrel.gov/publications.

Kasus #	Tipe dari Gangguan	Tampilan #	Pengamatan
11	Angin Tinggi Beban Tinggi dengan Energy Storage	Figure G-24 and G-25	Energy storage memenuhi daya ketika kedua PLTB (masing masing berdaya 850-kW) terlepas dari jaringan. Energy storage memenuhi daya sebesar 1.5MW sampai generator yang ditentukan CAT C32 mulai menghasilkan daya sebesar 0.55MW pada 10 detik. Hal ini mengurangi kontribusi dari Energy storage ke 0.95MW. Sesudah 30 detik, ketika energy dalam storage sudah habis, terjadi penurunan frekuensi yang tak terkendalikan karena hilangnya daya yang besar dari jaringan daya. Untuk menghindari penurunan frekwensi tak terkendalikan, perlu ditambahkan dua unit generator cadangan CAT C32 ber kapasitas 0.55MW dengan kemampuan start-up 10 detik, Atau, pemutusan beban terencana (load shedding) harus di rencanakan jika hal ini terjadi.
12	Angin Tinggi Beban Rendah dengan Energy Storage	Figure G-26 and G-27	Energy storage memenuhi daya ketika kedua PLTB (masing masing berdaya 850-kW) terlepas dari jaringan. Energy storage memenuhi daya sebesar 1.8MW sampai generator yang ditentukan CAT C32 mulai menghasilkan daya sebesar 0.55-MW pada 10 detik. Hal ini mengurangi kontribusi dari Energy storage ke 1.2MW. Sesudah 30 detik, ketika energy dalam storage sudah habis, terjadi penurunan frekuensi yang tak terkendalikan karena hilangnya daya yang besar dari jaringan daya. Untuk menghindari penurunan frekwensi tak terkendalikan, perlu ditambahkan dua unit generator cadangan CAT C32 ber kapasitas 0.55MW dengan kemampuan start-up 10 detik, Atau, pemutusan beban terencana (load shedding) harus di rencanakan jika hal ini terjadi.
Gangguan pada generator di bus Kambajawa. Gangguan terjadi pada 1 detik, dan tidak dihilangkan.			

This report is available at no cost from the National Renewable Energy Laboratory (NREL) at www.nrel.gov/publications.

Kasus #	Tipe dari Gangguan	Tampilan #	Pengamatan
13	Angin Tinggi Beban Tinggi	Figure G-28, G-29 and G-30	Frekwensi menurun tak terkendalikan karena hilangnya daya sebesar 650kW dari generator. Tidak cukup daya cadangan dari generator lainnya untuk mengganti kehilangan daya ini. Karena hal ini, frekwensi turun selama 10 detik sampai rendah sekali sehingga PLTB terlepas (under frequency relay protection) dari jaringan. Hal ini menyebabkan hilangnya daya total sebesar 2.35 MW dari sistim jaringan. Sehnigga ketika generator CAT C32 mulai memasok daya pada 10 detik, generatornya tidak bisa sinkron, dan seluruh sisim jaringan terlepas dari sinkronisasi.
14	Angin Tinggi Beban Rendah	Figure G-31 and G-32	Frekwensi menurun tak terkendalikan karena hilangnya daya sebesar 420kW dari generator. Tidak cukup daya cadangan dari generator lainnya untuk mengganti kehilangan daya ini. Karena hal ini, frekwensi turun selama 10 detik sampai rendah sekali sehingga PLTB terlepas (under frequency relay protection) dari jaringan. Hal ini menyebabkan hilangnya daya total sebesar 2.35 MW dari sistim jaringan. Sehnigga ketika generator CAT C32 mulai memasok daya pada 10 detik, generatornya tidak bisa sinkron, dan seluruh sisim jaringan terlepas dari sinkronisasi.
15	Angin Tinggi Beban Tinggi dengan Energy Storage	Figure G-33 and G-34	Pada saat gangguan, energy storage segera menenuhi daya sebesar 600kW. Hal ini menyebabkan sistim stabil sampai generator cadangan, CAT C32, mulai memasok daya pada 10 detik. Pada 30 detik, ketika energy storage down, sistim nya tetap stabil.
16	Angin Tinggi Beban Rendah dengan Energy Storage	Figure G-35 and G-36	Pada saat gangguan, energy storage segera menenuhi daya sebesar 500kW. Hal ini menyebabkan sistim stabil sampai generator cadangan, CAT C32, mulai memasok daya pada 10 detik. Ada cukup banyak daya tersedia dari generator yang ada untuk mengganti daya yang hilang dari jaringan.
Hilangnya beban di bus Kambajawa. Gangguan terjadi pada 1 detik, dan beban tidak disambung kembali.			

This report is available at no cost from the National Renewable Energy Laboratory (NREL) at www.nrel.gov/publications.

Kasus #	Tipe dari Gangguan	Tampilan #	Pengamatan
17	Angin Tinggi Beban Tinggi	Figure G-37, G-38 and G-39	Beban sebesar 3.494MW terlepas dari jaringan pada 1 detik di bus Kambajawa. Frekwensi di bus meningkat sampai 1.04 p.u., dan tegangan bus meningkat sebanyak 0.02 p.u., tetapi secara keseluruhan sistim stabil. Seperti yang tergambar, generator mengurangi daya nya sebesar 60%-70% dari daya awal. Dalam prakteknya, beberapa diesel genset akan dilepas dari jaringan untuk mengatur stabilitas.
18	Angin Tinggi Beban Rendah	Figure G-40 and G-41	Beban sebesar 1.691MW terlepas dari jaringan pada 1 detik di bus Kambajawa. Frekwensi dan tegangan di bus meningkat sedikit, tetapi secara keseluruhan sistim stabil. Seperti yang tergambar, generator mengurangi daya nya sampai negative. Dalam prakteknya, satu atau beberapa diesel genset akan dilepas dari jaringan untuk mengatur stabilitas.
19	Angin Tinggi Beban Tinggi dengan Energy Storage	Figure G-42 and G-43	Beban sebesar 3.494MW terlepas dari jaringan pada 1 detik di bus Kambajawa. Frekwensi di bus meningkat sampai 1.04 p.u., tetapi secara keseluruhan sistim stabil. Karena adanya Energy Storage dalam jaringan, terlihat energy storage mulai menyerap daya pada 1 detik. Seperti yang tergambar, generator mengurangi daya nya sebesar 60%-70% dari daya awal sampai energy storage dilepas pada 30 detik. Dalam prakteknya, beberapa diesel genset akan dilepas dari jaringan untuk mengatur stabilitas.
20	Angin Tinggi Beban Rendah dengan Energy Storage	Figure G-44 and G-45	Beban sebesar 1.691 MW terlepas dari jaringan pada 1 detik di bus Kambajawa. Frekwensi di bus meningkat sampai 1.04 p.u., dan tegangan bus meningkat sedikit, tetapi secara keseluruhan sistim stabil. Energy storage mulai menyerap daya pada 1 detik. Dalam prakteknya, satu atau beberapa diesel genset akan dilepas dari jaringan untuk mengatur stabilitas.
Gangguan pada penyulang Kambajawa-Haharu. Gangguan terjadi pada 1 detik dan dihilangkan pada 1.18 detik			
21	Angin Tinggi Beban Tinggi	Figure G-46, G-47 and G-48	Terjadi islanding di bus Haharu (bus Haharu terisolasi). Beban di Haharu lterlepas dari jaringan selama 180 ms. Sesudah gangguan dihilankan, sistim stabil = pembebanan penyulang, tegangan dan frekwensi kembali normal.

This report is available at no cost from the National Renewable Energy Laboratory (NREL) at www.nrel.gov/publications.

Kasus #	Tipe dari Gangguan	Tampilan #	Pengamatan
22	Angin Tinggi Beban Rendah	Figure G-49 and G-50	Terjadi islanding di bus Haharu (bus Haharu terisolasi). Beban di Haharu lterlepas dari jaringan selama 180 ms. Sesudah gangguan dihilankan, sistim stabil = pembebanan penyulang, tegangan dan frekwensi kembali normal.
23	Angin Tinggi Beban Tinggi dengan Energy Storage	Figure G-51 and G-52	Terjadi islanding di bus Haharu (bus Haharu terisolasi). Beban di Haharu lterlepas dari jaringan selama 180 ms. Sesudah gangguan dihilankan, sistim stabil = pembebanan penyulang, tegangan dan frekwensi kembali normal. Energy storage memenuhi daya selama PLTB mulai normal setelah LVRT.
24	Angin Tinggi Beban Rendah dengan Energy Storage	Figure G-53 and G-54	Terjadi islanding di bus Haharu (bus Haharu terisolasi). Beban di Haharu lterlepas dari jaringan selama 180 ms. Sesudah gangguan dihilankan, sistim stabil = pembebanan penyulang, tegangan dan frekwensi kembali normal. Energy storage memenuhi daya selama PLTB mulai normal setelah LVRT.

This report is available at no cost from the National Renewable Energy Laboratory (NREL) at www.nrel.gov/publications.

4 Kesimpulan

Jaringan Sumba Timur telah dianalisa untuk aliran daya, short circuit, dan analisa transien.

Analisa aliran daya menunjukkan bahwa analisa dasar dan dalam analisa dengan satu PLTB, tidak ada overloading dari generator, tidak ada overloading dari konduktor, dan semua tegangan bus berada dalam batas normal.

Analisis short circuit menunjukkan bahwa short-circuit power ratio ada dalam batasan normal di atas persyaratan minimum untuk bus Haharu – titik pertemuan penyulang untuk PLTB. Selain itu, karena kontribusi arus short circuit dari PLTB sangatlah kecil, kapasitas daya perangkat di gardu listrik tidak terdampak.

Studi stabilitas transien dilakukan untuk menganalisa dampak dari pengadaan satu 850-kW WTG menunjukkan adanya masalah stabilitas. Penambahan energy storage pada jaringan listrik, ditambah dengan generator cadangan, controller hybrid, dan komunikasi berkecepatan tinggi dalam jaringan akan menjamin stabilitas sistem. Energy storage berkapasitas setidaknya 500 kW kapasitas dan 4,17 kWh energi akan cukup untuk memastikan stabilitas jaringan daya. Disamping penambahan storage, diesel genset, CAT C32, dengan kapasitas 550 kW dengan kemampuan start-up dalam 10 detik harus dipakai sebagai generator cadangan. Ini semua harus dikontrol oleh controller hybrid yang dapat semua diesel genset, PLTB, dan energy storage berdasarkan data-data jaringan, output dari PLTB, kondisi tenaga (state of charge) energy storage, dan faktor lainnya. Ini juga akan membutuhkan komunikasi kecepatan tinggi antara controller hybrid dan semua unit peringkat yang dikontrol yang ada pada jaringan.

Kesimpulannya, bahwa penambahan satu PLTD berdaya 850kW di Sumba Timur dengan energy storage berkapasitas 500kW (dengan setidaknya 4.17kWh), 550kW genset diesel cadangan dengan kemamputan10 detik start-up, pengendali pembangkit listrik hybrid controller, dan komunikasi kecepatan tinggi dalam jaringan adalah solusi yang akan meningkatkan keandalan pasokan energi, meningkatkan stabilitas sistem dan mengurangi emisi greenhouse gas.

Untuk penambahan dua PLTB yang masing-masing berkapasitas 850-kW akan membutuhkan penambahan energy storage sebesar 1.500 kW, (sedikit di bawah kapasitas total dua PLTB). Energy storage ini dirancang untuk menyediakan tenaga listrik selama 60 detik, waktu yang cukup untuk start-up diesel genset cadangan. Selain energy storage, satu CAT C32 diesel genset generator dengan kapasitas 550 kW dan kemampuan start-up dalam waktu 10 detik dan generator lainnya dengan total kapasitas 950 kW dengan kemampuan start-up 60-detik harus dipakai sebagai generator cadangan. Perhatikan bahwa peningkatan daya PLTB dari 850 kW ke 1.700 kW menyebabkan penambahan yang cukup besar untuk pengadaan energy storage dan generator cadangan, dan akan memakan biaya yang cukup tinggi untuk memperkuat jaringan daya (storage, generator cadangan, dan hybrid controller). Disarankan bahwa sebagai langkah pertama hanya satu PLTB berkapasitas 850-kW diintegrasikan ke jaringan. Setelah semua masalah pemasangan diselesaikan, data-data baru harus dikumpulkan berdasarkan penambahan satu PLTB, dan analisa jaringan teknis untuk penambahan skenario dua turbin harus dijalankan lagi. Pilihan-pilihan lain seperti penempatan dua PLTB di kawasan yang sama atau memilih lokasi yang berbeda antara kedua PLTB harus dievaluasi lagi. Data data baru dan pengalaman

This report is available at no cost from the National Renewable Energy Laboratory (NREL) at www.nrel.gov/publications.

yang diperoleh dari integrasi PLTB pertama akan membuat analisa dampak pada jaringan untuk PLTB yang berikutnya akan lebih tepat dan teliti.

This report is available at no cost from the National Renewable Energy Laboratory (NREL) at www.nrel.gov/publications.

5 Referensi

Hirsch, B., K. Burman, C. Davidson, M. Elchinger, R. Hardison, D. Karsiwulan, and B. Castermans. 2015. *Sustainable Energy in Remote Indonesian Grids: Accelerating Project Development.* (Technical Report) NREL/TP-7A40-64018. Golden, CO: National Renewable Energy Laboratory. http://www.nrel.gov/docs/fy15osti/64018.pdf.

Hivos International. 2011. Grid-Connected Electricity Generation—Final Report, April 2011. Arnhem: The Netherlands. https://hivos.org/grid-connected-electricity-generation-final-report-april-2011.

This report is available at no cost from the National Renewable Energy Laboratory (NREL) at www.nrel.gov/publications.