NREL
NATIONAL RENEWABLE ENERGY LABORATORY

Developing a Cost Model and Methodology to Estimate Capital Costs for Thermal Energy Storage

G. Glatzmaier

NREL is a national laboratory of the U.S. Department of Energy, Office of Energy Efficiency & Renewable Energy, operated by the Alliance for Sustainable Energy, LLC.

Technical Report
NREL/TP-5500-53066
December 2011

Contract No. DE-AC36-08GO28308

NATIONAL RENEWABLE ENERGY LABORATORY

Developing a Cost Model and Methodology to Estimate Capital Costs for Thermal Energy Storage

G. Glatzmaier

Prepared under Task No. CP09.2201

NREL is a national laboratory of the U.S. Department of Energy, Office of Energy Efficiency & Renewable Energy, operated by the Alliance for Sustainable Energy, LLC.

National Renewable Energy Laboratory
1617 Cole Boulevard
Golden, Colorado 80401
303-275-3000 • www.nrel.gov

Technical Report
NREL/TP-5500-53066
December 2011

Contract No. DE-AC36-08GO28308

NOTICE

This report was prepared as an account of work sponsored by an agency of the United States government. Neither the United States government nor any agency thereof, nor any of their employees, makes any warranty, express or implied, or assumes any legal liability or responsibility for the accuracy, completeness, or usefulness of any information, apparatus, product, or process disclosed, or represents that its use would not infringe privately owned rights. Reference herein to any specific commercial product, process, or service by trade name, trademark, manufacturer, or otherwise does not necessarily constitute or imply its endorsement, recommendation, or favoring by the United States government or any agency thereof. The views and opinions of authors expressed herein do not necessarily state or reflect those of the United States government or any agency thereof.

Available electronically at http://www.osti.gov/bridge

Available for a processing fee to U.S. Department of Energy
and its contractors, in paper, from:

U.S. Department of Energy
Office of Scientific and Technical Information

P.O. Box 62
Oak Ridge, TN 37831-0062
phone: 865.576.8401
fax: 865.576.5728
email: mailto:reports@adonis.osti.gov

Available for sale to the public, in paper, from:

U.S. Department of Commerce
National Technical Information Service
5285 Port Royal Road
Springfield, VA 22161
phone: 800.553.6847
fax: 703.605.6900
email: orders@ntis.fedworld.gov
online ordering: http://www.ntis.gov/help/ordermethods.aspx

Cover Photos: (top left to right) PIX 16416, PIX 17423, PIX 16560, PIX 17613, PIX 17436, PIX 17721
(center montage) PIX 06051, PIX 00033, PIX 19881, lower right photo from AREVA Solar PIX 19882

Printed on paper containing at least 50% wastepaper, including 10% post consumer waste.

Table of Contents

Introduction 1
Objective 3
Background 3
Types of Thermal Energy Storage 3
Previous Analyses 6
2011 TES Cost Analysis 7
Two-Tank Molten Salt Base Case 7
High-Temperature, Two-Tank Storage Cost Methodology and Model 8
Results for High-Temperature Analysis 9
Methodology for Phase-Change Thermal Energy Storage 11
Methodology for Thermochemical Thermal Energy Storage 12
Discussion 14
Future Work 15
References 17

List of Figures

Figure 1. Power-cycle efficiencies for CSP technologies 2
Figure 2. Thermal energy storage options for CSP technologies. 4
Figure 3. Assignment of components to power tower subsystems 9
Figure 4. Costs for direct, two-tank thermal energy storage 10
Figure 5. Components of a generalized thermochemical storage system for CSP. 13

List of Tables

Table 1. Component costs for direct, two-tank molten salt TES system (base case). 7

Introduction

The goal of the Department of Energy (DOE) Solar Energy Technology Program is to develop solar technologies that can make a significant contribution to the United States domestic energy supply. The recent DOE SunShot Initiative sets a very aggressive cost goal to reach a Levelized Cost of Energy (LCOE) of 6¢/kWh by 2020 with no incentives or credits for all solar-to-electricity technologies.[1] As this goal is reached, the share of utility power generation that is provided by renewable energy sources is expected to increase dramatically. Because Concentrating Solar Power (CSP) is currently the only renewable technology that is capable of integrating cost-effective energy storage, it is positioned to play a key role in providing renewable, dispatchable power to utilities as the share of power generation from renewable sources increases. Because of this role, future CSP plants will likely have as much as 15 hours of Thermal Energy Storage (TES) included in their design and operation. As such, the cost and performance of the TES system is critical to meeting the SunShot goal for solar technologies.

The cost of electricity from a CSP plant depends strongly on its overall efficiency, which is a product of two components—the collection and conversion efficiencies. The collection efficiency determines the portion of incident solar energy that is captured as high-temperature thermal energy. The conversion efficiency determines the portion of thermal energy that is converted to electricity. The operating temperature at which the overall efficiency reaches its maximum depends on many factors, including material properties of the CSP plant components. Increasing the operating temperature of the power generation system leads to higher thermal-to-electric conversion efficiency. However, in a CSP system, higher operating temperature also leads to greater thermal losses. These two effects combine to give an optimal system-level operating temperature that may be less than the upper operating temperature limit of system components. The overall efficiency may be improved by developing materials, power cycles, and system-integration strategies that enable operation at elevated temperature while limiting thermal losses. This is particularly true for the TES system and its components.

Meeting the SunShot cost target will require cost and performance improvements in all systems and components within a CSP plant. Solar collector field hardware will need to decrease significantly in cost with no loss in performance and possibly with performance improvements. As higher temperatures are considered for the power block, new working fluids, heat-transfer fluids (HTFs), and storage fluids will all need to be identified to meet these new operating conditions. Figure 1 shows thermodynamic conversion efficiency as a function of temperature for the ideal Carnot cycle and 75% Carnot, which is considered to be the practical efficiency attainable by current power cycles. Current conversion efficiencies for the parabolic trough steam cycle, power tower steam cycle, parabolic dish/Stirling, Ericsson, and air-Brayton/steam Rankine combined cycles are shown at their corresponding operating temperatures. Efficiencies for supercritical steam and carbon dioxide (CO_2) are also shown for their operating temperature ranges.

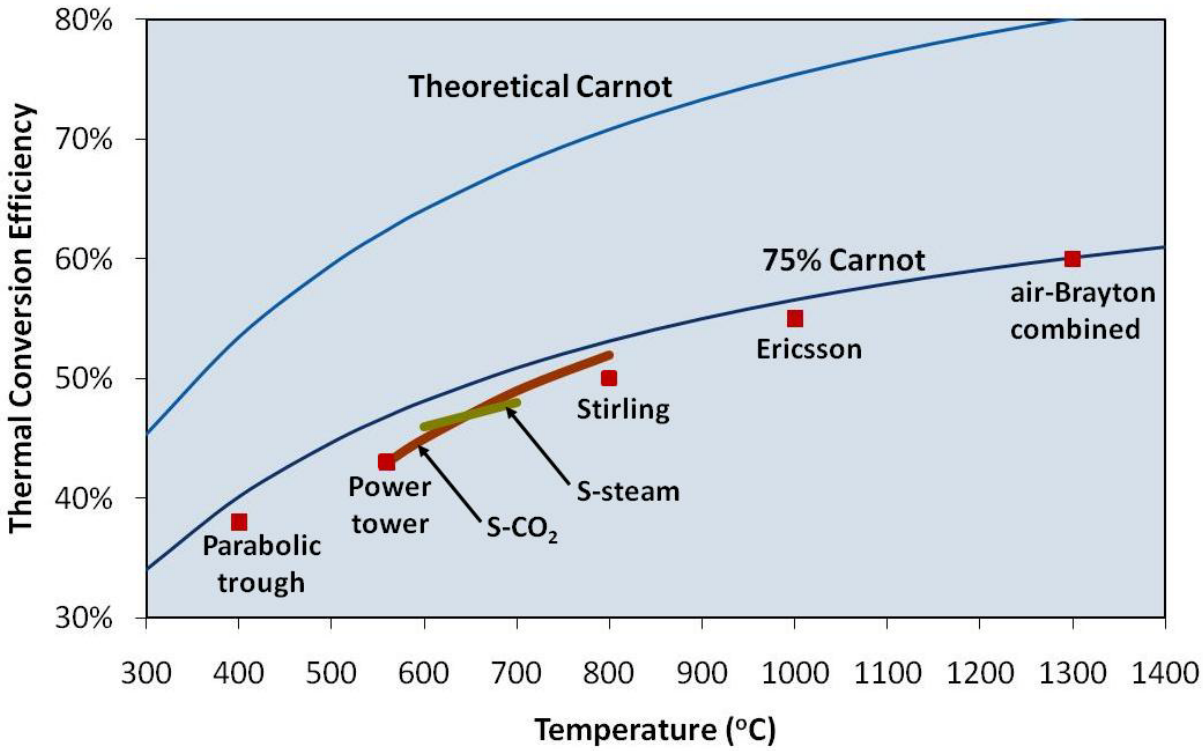

Figure 1. Power-cycle efficiencies for CSP technologies

Figure 1 makes clear the benefit of increased power-cycle operating temperature. Moving in this direction requires the use of working fluids other than subcritical steam for parabolic troughs and power towers. Supercritical steam and CO_2 are options that correspond to power cycles in the 600° to 800°C range. Air-Brayton cycles are being considered in which a combination of solar energy and natural gas heat air to about 1,300°C and would be the first stage in a combined power cycle. These working fluids will impact the requirements for the HTF. In some cases, the HTF and working fluid may be the same, as in the case of a supercritical CO_2 power cycle that uses a supercritical CO_2 receiver or an air-Brayton cycle that uses an air receiver.

These cycles also dictate the requirements for the TES system that will couple to the power cycle and receiver. Temperatures greater than the current power tower temperature (565°C) will be required, and whether that temperature falls into the 565° to 800°C range or is closer to 1,300°C will depend, to a large extent, on the feasibility of developing a TES system able to operate at the corresponding temperature while keeping the associated system losses to a minimum with high-temperature operation. These performance requirements are captured in the round-trip-efficiency of the TES system. This efficiency accounts for all thermal, exergy, and parasitic losses associated with the storage system and should have a value greater than 90% to have a positive impact on the LCOE of the plant.

In addition to these performance requirements, the TES system will need to have a low capital cost. The target cost for the TES system depends on other cost and performance factors for the power plant but an initial target has been established at about $15/kWh$_{th}$. The higher temperature drops across the power block for these advanced cycles increase the stored-energy density of the sensible portion of the TES system, which helps to reduce storage inventory and

capital costs. This effect can be substantial; for example, the cost for indirect, molten-salt TES for troughs operating at 390°C is about 2.5 times greater than the cost for direct, molten-salt TES for towers operating at 565°C.

Objective

The objective of this work was to update the previous cost model for TES systems to allow us to estimate the costs of TES systems that are compatible with the higher operating temperatures associated with advanced power cycles. For sensible storage, we updated and developed a new TES cost model that is based on the commercialized, direct, two-tank molten salt system. The model estimates the capital cost for sensible storage systems as a function of maximum operating temperature, storage medium heat capacity, storage medium cost, number of storage tanks, and storage tank material cost. In addition, we developed methodologies for estimating the costs of phase-change and thermochemical storage. These methodologies take into account the increased storage density associated with these types of storage as well as considerations for power density requirements and exergy losses due to temperature drops within the TES system.

The scope of this work was limited to TES capital cost estimation. It does not include an estimate of round-trip-efficiency for TES systems. A separate, ongoing analysis is evaluating power plant performance as a function of the thermophysical properties of likely HTFs and storage materials, and will be completed in FY12. In that analysis, varying thermophysical properties are provided to the System Advisor Model (SAM), which then determines power plant performance and LCOE impact as a function of the properties. Results from that analysis, along with the TES cost estimates from this work, will provide a complete assessment of LCOE impact of new TES systems.

Background

CSP plants with TES are unique among renewable technologies in that they provide utility-scale, dispatchable electricity to the power grid. Dispatchable delivery means power is reliably available when it is needed to match utility load and there is no need for backup power generation. This feature is enabled by the incorporation of TES into the power plants. TES allows electricity to be generated consistently at times when sunlight is not available, including momentary cloud transients, which otherwise disrupt electricity generation and cause widely varying power output. For longer time scales, TES allows CSP plants to generate electricity well into the evening hours when electricity is highly valued, making the power plant more cost-effective. TES also allows greater use of the turbine and other power-block components. These features provide an economic incentive for the addition of TES. Without TES, CSP solar power is an intermittent power resource that depends on sunlight availability. CSP with TES may also enable increased deployment of photovoltaic and wind power systems, which do not yet have cost-effective energy storage.

Types of Thermal Energy Storage

Figure 2 lists a variety of TES options for CSP plants.[2, 3] They fall into three general categories: sensible, latent, and thermochemical storage. A book published in the mid 1980s provides a comprehensive survey of the fundamentals of the storage options, examples of systems, and the issues that must be addressed for technologies in the range from low to high temperatures.[4] The

only TES system that currently operates with multiple hours of storage is the sensible, two-tank, molten-salt system. This system is used because the components associated with molten-salt handling—pumps, valves, tanks, and heat exchangers—have demonstrated reliable operation at commercial scale. The design also exhibits excellent (>90%) round trip energy and exergy efficiency.

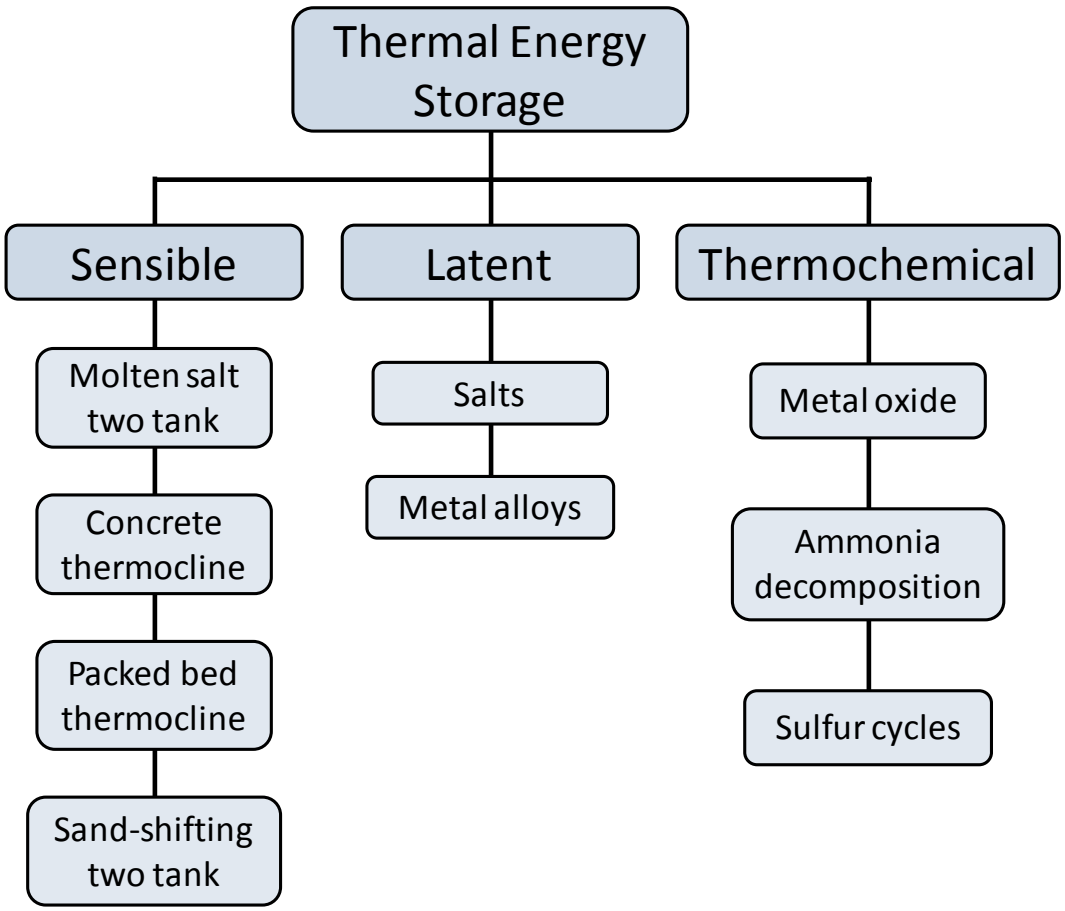

Figure 2. Thermal energy storage options for CSP technologies.

The molten-salt storage fluid in current commercial plants is a mixture of sodium nitrate ($NaNO_3$) and potassium nitrate (KNO_3). This fluid is liquid in both the charge and discharge states, so there are minimal heat-transfer limitations, making the heat-exchanger design relatively straightforward. One drawback of this system is the relatively low stored-energy density, which requires a large storage medium inventory, which in turn requires large insulated storage vessels, especially when running at current parabolic trough operating temperatures.

Integrating this TES system into parabolic trough power plants requires an indirect configuration—distinct heat-transfer and storage fluids—because the storage salt has a high freezing point (220°C) and could possibly freeze in the solar collectors if used as the HTF. The indirect system requires a heat exchanger for transferring thermal energy between the HTF and storage fluid. This heat exchanger reduces the performance of the storage system and adds cost to the plant. This approach has been demonstrated commercially in Spain at the Andasol plants.

Integrating this TES system into power towers can be accomplished using a direct configuration because the risk of salt freezing in the receiver and vertical transfer lines of the power tower is much less than the risk of salt freezing in a parabolic trough collector field. This configuration eliminates the need for the heat exchanger, thereby reducing capital cost and increasing the performance of the TES system. Direct storage decouples solar energy collection from power generation (salt can flow at different rates in the two loops), thereby providing greater operating flexibility. Direct TES is currently being used in the Gemasolar Power Tower Plant in Spain. This plant will have 15 hours of TES and be able to operate as a baseload power plant during the summer months.

The stored-energy density of the two-tank system can be increased in two ways. First, increasing the maximum operating temperature of the power plant increases the temperature drop across the turbine. Higher-temperature drops increase the efficiency of the turbine power-cycle and the stored-energy density of the sensible portion of the TES system, which is proportional to $mC_p\Delta T$. At very high temperatures, the cost of the containment vessel(s) for the storage system may negate the cost benefit from increased temperature drop. Second, increasing the heat capacity, C_p, of the storage medium also directly increases the stored-energy density. These effects are important to reducing size, and therefore affect the capital cost of the two-tank TES system.

Thermocline systems that use low-cost storage materials offer an opportunity for reducing TES costs. The cost benefit of thermoclines is significant, especially if the storage material is low-cost and self-supporting. In this case, the structural requirements of the containment vessel can be reduced. However, thermoclines have more complex operating requirements than the two-tank, molten-salt system, which creates the potential for utilization and performance losses. Modeling and testing of thermoclines suggest they represent a likely near-term advance in TES design.

In addition to thermoclines, other alternatives to the two-tank, molten-salt storage system are being considered to increase the stored-energy density and, ultimately, to reduce the cost of the TES system. The most developed alternative is the use of phase-change materials (PCMs) to increase stored-energy density. PCMs have both latent and sensible enthalpies that contribute to the stored-energy density, providing a potential benefit over purely sensible systems. PCM systems suffer from a limitation in heat transfer during the discharge process due to the generally low thermal conductivity of the solid phase. (The exception to this case is metal PCMs; however, cost prohibits the use of most metal PCM candidates.) The heat transfer limitation causes low power density in PCM systems and will need to be overcome if PCM storage is to become a viable alternative. PCM storage is the most compatible storage system for the parabolic dish/Stirling concentrator because thermal energy delivery to the engine is isothermal, matching the operating conditions for that cycle.

The third option, thermochemical storage, offers perhaps the greatest benefit because of the large quantity of stored energy associated with the heat of reaction. Practical implementation of these systems is often limited by the loss of system performance as they are put through many charge/discharge cycles. System performance depends on maintaining consistent physical and chemical properties of the chemical components and of any solid-phase materials used in the system over many cycles. Over time, degradation of these material properties may result in reducing both the system heat-transfer rate and storage capacity. In addition, some cycles

require the handling of gas-phase reactants that may require compression or corrosive substances that require special materials of construction. The benefits of very high energy densities and the possibility of storing reaction products at ambient temperature keep thermochemical storage under consideration for CSP technologies.

Previous Analyses

In 2007, NREL and Sandia National Laboratories (SNL) developed the Advanced Thermal Energy Storage Plan[5] for parabolic trough technology. The plan included an analysis of the benefits of thermal energy storage, barriers to the implementation of TES, and recommendations for future R&D that will both reduce the cost and improve the performance of parabolic trough power plants that use TES. The primary recommendation of this analysis was to evaluate and develop molten salt as the HTF for the solar collector field as well as the storage fluid.

In 2009, NREL and SNL developed a Multi-Year CSP Thermal Storage Plan[6] that was a continuation and expansion of the 2007 Thermal Storage Plan. The goal of this plan was to establish cost targets, performance criteria, and methods for evaluating existing and new HTFs and thermal energy storage concepts as they are investigated and developed, both within the laboratories and through the TES Funding Opportunity Announcement (FOA) projects. Also in 2009, NREL and Worley-Parsons updated costs for a 100 MW_e parabolic trough power plant with 6 hours of TES. This analysis provided baseline capital costs for the major components and installation factors for the indirect, two-tank molten salt storage system.

In 2010, NREL and SNL conducted roadmapping exercises for line focus and power tower technologies. These plans focused on achieving cost targets for intermediate load markets that were less aggressive than the current SunShot targets. The Line Focus Development Plan[7] identified capital cost reductions and performance improvements for components and systems relating primarily to parabolic trough power plants. The plan identified cost reductions resulting from improvements in operation and maintenance, parasitic power requirements, and other cost factors. Impacts to LCOE for these cost and performance improvements were quantified.

Both roadmaps identified and prioritized Technology Improvement Opportunities (TIOs) that will aid in meeting the future cost goals. TIOs were identified for collectors, heliostats, and other components as well as for TES. Among the TIOs relating to TES, the highest priority for both parabolic troughs and power towers was development of a high-temperature HTF—500°C for troughs, 600°C for towers. The development of low-cost, high-energy-density materials and systems was also identified as a high priority for both systems.

In 2010, NREL conducted an evaluation of potential cost reductions resulting from the TES FOA projects using TIOs identified in the roadmapping exercises. All of the TES FOA projects addressed at least one of the TIOs identified in the trough and tower roadmapping exercises. To quantify potential cost reductions that may result from the FOA projects, NREL estimated the cost reduction associated with each of the TIOs for TES. Costs estimates of the two-tank molten salt storage system from the 2009 NREL/Worley-Parsons study were used as the base case for this analysis. Estimated cost reductions were determined using a TES cost model that provided capital costs to the Solar Advisor Model (SAM, version 2010-04-12).

2011 TES Cost Analysis

Two-Tank Molten Salt Base Case

The basis for the two-tank molten salt storage system was the 2009 capital cost estimate for two-tank storage for a 100 MW_e parabolic trough power plant with 6 hours of TES[8]. Recent discussions with CSP industry members allowed us to update our cost estimates in 2011. Because this analysis is directed at higher operating temperatures, the 2011 base case TES system was assumed to be direct rather than indirect, as in the 2009 cost estimate. Our 2011 component costs for the direct, two-tank TES system are presented in Table 1.

The costs in Table 1 had the following assumptions:

- High temperature = 565°C, low temperature = 293°C, ΔT = 272°C
- High-temperature tank material—321 stainless steel
- Low-temperature tank material—carbon steel
- Salt cost = $1.23/kg
- Electrical and instrumentation costs = 7% of total tank costs
- Piping, valves, and fittings costs = 3% of total tank costs
- Sales tax = 4%
- Contingency = 7%.

Table 1. Component costs for direct, two-tank molten salt TES system (base case).

Component	Materials ($/kWh$_{th}$)	Installation ($/kWh$_{th}$)	Total Cost ($/kWh$_{th}$)
High-temperature tank—stainless steel	5.20	1.84	7.04
Low-temperatures tank—carbon steel	1.30	1.84	3.14
Tank supports, foundations, and site work	1.10	1.55	2.65
Storage medium	11.74	0.36	12.10
Electrical and instrumentation	0.47	0.43	0.90
Piping, valves, and fittings	0.20	0.18	0.39
Totals	20.01	6.22	**26.22**

The components listed in Table 1 do not include the hot and cold tank salt pumps. The convention for power towers is to include the cold-tank pump with the receiver system and the hot-tank pump with the steam generation system. The assignment of components to power tower subsystems is shown in Figure 3 and was used in the 2009 power tower road-mapping study that was conducted by SNL, DOE, and NREL.[9]

High-Temperature, Two-Tank Storage Cost Methodology and Model

Based on the costs presented in Table 1, a cost model was developed to estimate the cost of any direct, two-tank storage system. Cost factors were defined to account for variations in the following characteristics of the two-tank storage system:

- Temperature drop across the thermal storage system (ΔT)
- Storage medium energy density (C_p for sensible media)
- Storage medium cost ($/kg)
- High-temperature tank materials cost
- Scaling exponent for tank volume and equipment size

The temperature drop factor (ΔT) accounts for temperature drops across the power block that are greater or less than 272°C. In all cases, the low-temperature tank was assumed to be 293°C. Storage medium C_p and cost account for variations in the storage medium characteristics. The material cost for the high-temperature tank accounts for the need to use more expensive construction materials as the maximum operating temperature of the plant increases. The scaling exponent for tanks and equipment accounts for the variation of cost with volume or size; 0.7 is the typical value used in the chemical process industries.

These cost factors were applied as appropriate to the material and installation costs presented in Table 1. For example, temperature drop (ΔT) and storage medium C_p along with storage medium cost ($/kg) determined the material cost of the storage medium. Temperature drop and storage medium C_p but not the storage medium cost determined the installation cost of the storage medium.

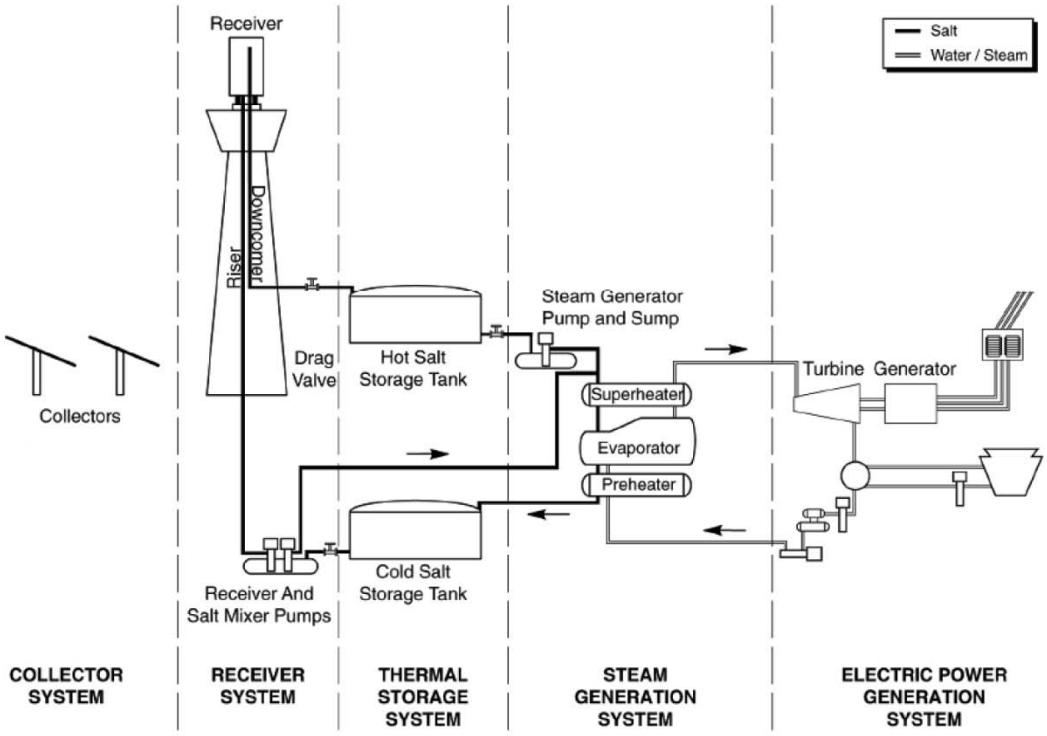

Figure 3. Assignment of components to power tower subsystems.[10]

For the storage tanks, temperature drop and storage medium C_p determined tank size. Tank material cost was based on tank size using the scaling exponent along with the tank material cost factor. Tank installation cost was determined in the same way but without the tank material cost factor. This approach was used to estimate all of the material and installation cost components in Table 1 and the total capital cost ($\$/kWh_{th}$) for storage systems that can be used with high-temperature power cycles.

Results for High-Temperature Analysis

Figure 4 shows the capital cost of direct, two-tank sensible storage systems as a function of the maximum operating temperature of the power plant. Because the low-temperature tank is always 293°C, the temperature drop is proportional to the maximum operating temperature. Two cost factors are included in the results—the C_p for the storage medium and the C_p for the high-temperature tank cost factor. The C_p factor, 1X, corresponds to C_p for the $NaNO_3/KNO_3$ binary mixture, 1.5 J/gK. The 1.5X and 2.5X factors are 2.25 J/gK and 3.75 J/gK respectively. Carbon steel can be used as the high-temperature tank material up to 450°C (1X cost factor). From 450°C to 650°C, the high-temperature tank construction material is 321 stainless steel (4X cost factor). Above 650°C, a nickel-based alloy having a 16X cost factor is required. The base case listed in Table 1 is shown as the triangle in Figure 4.

This analysis estimated the cost of direct TES at 400°C to be $\$52/kWh_{th}$. The 2009 Worley-Parsons study[8] estimated the cost of indirect storage at this temperature to be about $\$80/kWh_{th}$. The difference in cost is due primarily to the additional costs of the heat exchanger, and hot and cold tank salt pumps, which are included in the cost of the indirect system. Commodity prices have also decreased somewhat in the past two years.

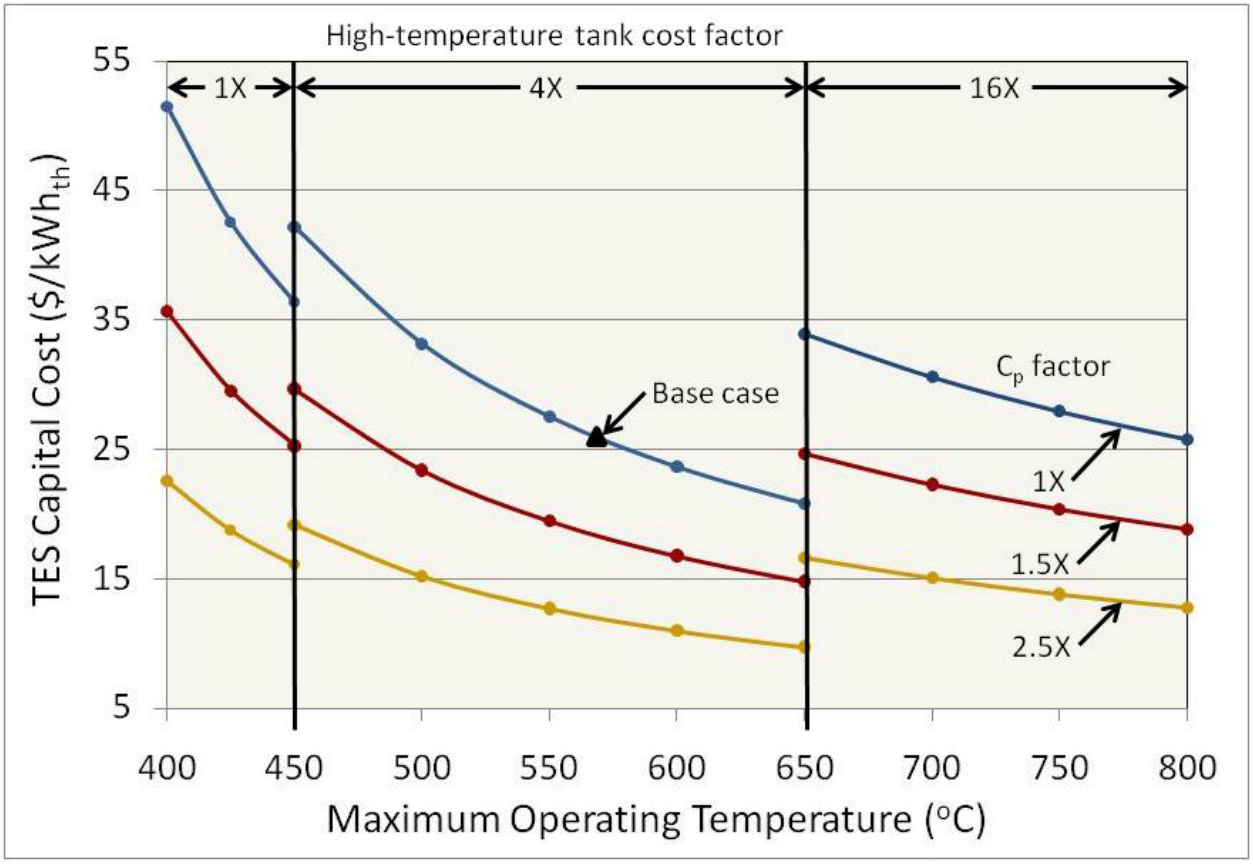

Figure 4. Costs for direct, two-tank thermal energy storage.

Figure 4 shows that the TES cost goal of $15/kWh$_{th}$ can be met in the temperature range of 500°C to 650°C using a storage medium that has a C_p of 3.75 J/gK and stainless steel as the storage tank material. The operating temperature that minimizes storage capital cost is 650°C—the maximum allowable temperature for 321 stainless steel. At 650°C, the cost goal can be met using a storage medium C_p of 2.25 J/gK (1.5 X C_p of $NaNO_3/KNO_3$). This C_p is in the range of heat capacities for materials that have been identified as candidate storage media for this temperature range. Looking at temperatures greater than 650°C, the cost of the nickel alloy tank material increases the cost of the storage system. The cost goal can be met at temperatures above 700°C when the storage medium has a C_p of 3.75 J/gK. The significant cost impact of nickel-alloy containment vessels highlights the need for alternative designs that can reduce vessel cost. Internally insulated tanks are being investigated by at least two contractors.

Methodology for Phase-Change Thermal Energy Storage

Thermal storage systems based on PCMs have the advantage of higher stored-energy density compared to sensible only thermal storage. Equations 1 and 2 depict the calculation for thermal energy storage capacity (kWh_{th}) for a sensible and latent TES system respectively. Comparing equations 1 & 2, equation 2 shows the extra enthalpy term associated with the phase change at a given temperature. In this case, the enthalpy is the heat of fusion for a solid-liquid transition.

$$Q_{Sensible} = m \int_{T_L}^{T_H} c_p(T)dT \qquad 1$$

$$Q_{Latent} = m \int_{T_L}^{T_{mp}} c_p(T)dT + m\Delta h_{fusion}\Big|_{T=T_{mp}} + m \int_{T_{mp}}^{T_H} c_p(T)dT \qquad 2$$

PCM storage can be incorporated into thermal storage in several ways. Nano- or micro-scale PCM particles can be suspended in a storage fluid to increase its effective heat capacity. In this case, the PCM flows with the storage fluid that remains liquid in both the charged and discharged states. The storage system can be the two-tank system with the PCM and storage fluid both contributing to the storage capacity of the system. Capital costs for this type of PCM storage can be estimated using the two-tank cost method described above, with the addition of nano- or micro-scale PCM to the storage fluid impacting the energy density factor and cost factor of the storage medium.

Another arrangement has the PCM fixed within the thermal storage system. In this arrangement, the PCM functions exclusively as the storage medium and an HTF passes near or through the PCM as the system charges or discharges. The PCM may be encapsulated as spheres or other shapes to fill a fixed bed. In this geometry, the HTF passes through the void volume of the fixed bed. Alternatively, a piping arrangement that functions as a heat exchanger may be embedded within a PCM monolith, with the HTF flowing through the pipes as the system charges or discharges.

In any of these arrangements, the phase transition of the PCM occurs at a single temperature or within a temperature range that is significantly less than the full temperature drop across the power block. This behavior may create excessive temperature drop and exergy loss during charge and discharge if the HTF has purely sensible enthalpy. To address this issue, multiple PCMs with a distribution of phase-transition temperatures may be incorporated in a cascaded storage system so that the change in enthalpy of the total storage medium more closely follows the enthalpy change for the sensible HTF.

The methodology for estimating the capital cost for a PCM storage system must include several additional design steps to obtain a storage system that has acceptable performance. The total enthalpy of the cascaded stages that make up the PCM system needs to be determined as a function of temperature within the temperature range of the storage system to determine the approach temperatures between the HTF and the PCM during charge and discharge. The contributions of these approach temperatures to exergy loss determine their impact on the performance of the power plant output.

Other design considerations are the material properties and vapor pressure of the HTF within the storage system. Tubing or encapsulation material must be selected that is compatible with HTF and PCM at the operating temperature and pressure ranges. If the HTF has a vapor pressure greater than one atmosphere at the operating temperature of the storage system, then use of PCM in a packed bed without tubing to contain the HTF is not feasible. For high-pressure HTFs, tubing with the proper schedule is embedded with the PCM to contain the HTF pressure.

A fundamental limitation of PCM storage systems is the low power density caused by the low thermal conductivity of the solid phase of most PCMs. Metals and metal alloys have conductivities in the range of 100 to 400 W/mK and do not present this problem when used as PCMs. Salts, however, have conductivities in the range of 0.5 W/mK and limit heat transfer and power density as the storage system discharges. To address this issue, a material with greater thermal conductivity may be suspended into the PCM to increase its effective thermal conductivity. The heat exchanger may be designed to increase the heat transfer surface and decrease the average distance from a PCM volume element to a heat transfer surface. A large difference in the PCM solid- and liquid-phase densities also presents a design issue and the tank must be sized to accommodate the volume of the lower density phase and also ensure that the heat transfer surfaces are contacted by both solid and liquid phases.

Once the number of PCM stages is determined and the PCM, tubing, and encapsulation materials are selected, a basic design can be specified for each stage. Tank sizes, material quantities, and component costs can be estimated using the method described in the two-tank storage case. A separate analysis must be performed to determine the design and cost of the tubing schedules and heat transfer area of the heat exchanger for each stage of the PCM system.

Methodology for Thermochemical Thermal Energy Storage

Thermochemical storage has the advantage of very high stored energy densities compared to PCM or sensible only thermal storage. Comparing equations 1 & 3, equation 3 shows the extra enthalpy term associated with the forward reaction at temperature, T_{Rf}. The first term represents the enthalpy associated with heating the reactant(s) from T_L to the forward reaction temperature, T_{Rf}. The third term in the equation accounts for the optional sensible enthalpy for increasing the temperature of the product(s) beyond the forward reaction temperature, T_{Rf}, to temperature, T_H.

$$Q_{thermochemical} = m\int_{T_L}^{T_{Rf}} c_p(T)dT + m\Delta h_{reaction}\Big|_{T=T_{Rf}} + m\int_{T_{Rf}}^{T_H} c_p(T)dT \qquad 3$$

Figure 5 shows a schematic of a generalized thermochemical storage system in which ***A*** reacts to ***B*** in the forward endothermic reaction and ***B*** reacts back to ***A*** in the reverse exothermic reaction. The endothermic reaction absorbs solar energy as ***A*** converts to ***B*** and occurs in a solar receiver/reactor. Ideally, ***A*** and ***B*** are stored at ambient temperature, T_L, so the sensible enthalpy in ***B*** is used to preheat ***A*** before it enters the reactor.

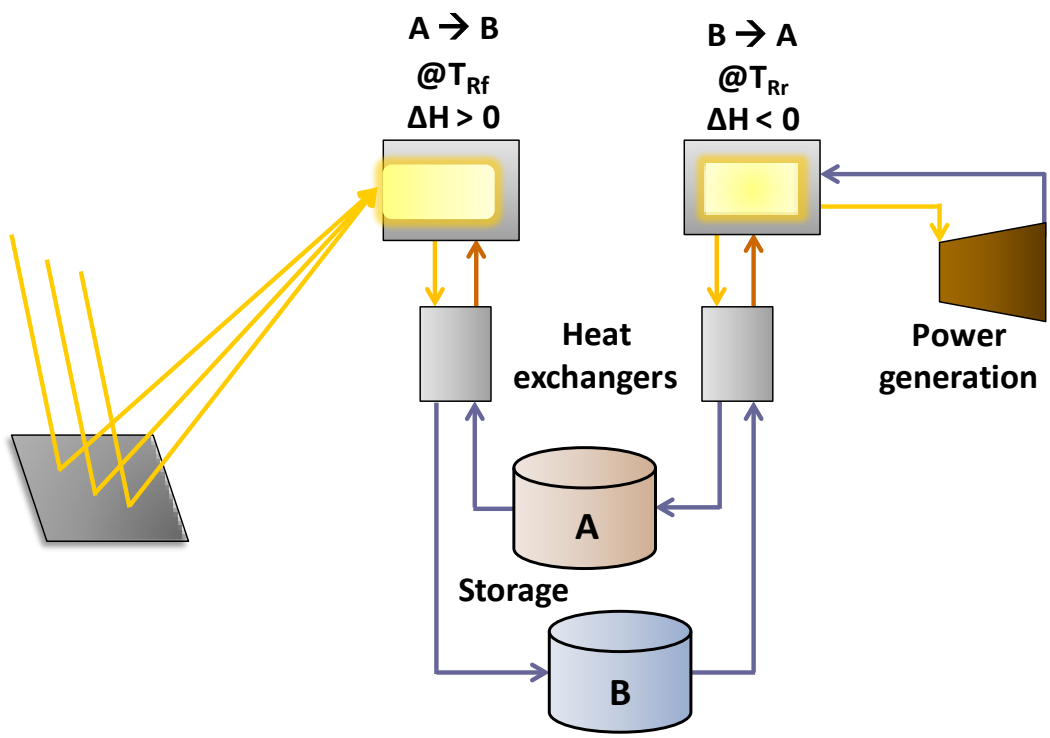

Figure 5. Components of a generalized thermochemical storage system for CSP.

To retrieve the stored energy, ***B*** is heated to the reverse exothermic reaction temperature, T_{Rr}, and converted back to ***A*** in a separate reactor. ***A*** supplies thermal energy for power generation—directly as the working fluid or indirectly to heat a working fluid. ***A*** preheats B, and then rejects the remainder of its enthalpy to return to storage at ambient condition.

Because the energy differences are the same for ***A*** → ***B*** and ***B*** → ***A***, the energy absorbed during charging (left side of Figure 5) and discharging (right side of Figure 5) are the same. The key condition that drives the overall efficiency and exergy loss of the storage system is the temperature difference between T_{Rf} and T_{Rr}. If T_{Rr} is much less than T_{Rf}, then the exergy loss will be significant and the overall performance of the storage system will be low.

Performing a complete cost analysis for thermochemical storage is more complex than the analyses for sensible or PCM storage. The schematic shown in Figure 5 includes a solar receiver/reactor, in which the forward endothermic reaction occurs, and several heat exchangers for heat rejection. These components are normally not included in the thermal storage system for cost analysis but are critical for thermochemical storage. To determine the cost of thermochemical storage, certain components may need to be omitted from the analysis even though they are required for the storage system. A cost comparison standard needs to be developed for thermochemical storage to fairly compare its costs to those of sensible and PCM storage systems.

Real thermochemical cycles are generally far more complex than the cycle shown in Figure 5. Multiple reactants and products along with multiple phases are usually involved, so kinetic limitations may reduce reaction conversion and rate. The first effect reduces the stored-energy density. The second effect reduces power density. Numerous types of thermochemical cycles

have been proposed and developed for thermal energy storage. Many use corrosive chemicals so material compatibility becomes an issue. Studies conducted by SNL summarized many of the possible thermochemical cycles that have been considered.[11, 12] At the time of the reports, these cycles generally had low conversion efficiencies and will need significant performance improvements before they can be applied to CSP technologies.

A cost methodology for thermochemical storage must include the basic steps:

- Identify a basic thermochemical cycle that is compatible with the operating temperature, pressure, and HTF of the advanced cycles
- Define all of the process components required to perform the cycle
- Define the boundaries between the storage system itself and other power plant subsystems
- Specify the reactor and storage tank materials based on reactant and HTF compatibilities and pressures
- Specify the heat exchanger tubing material and schedule based on reactant and HTF compatibilities and pressures
- Estimate material quantities, components and costs for the total system and calculate total installed cost
- Define how start up, shut down, and varying TES cycle performance will impact the overall generation from the power plant.

The operational energy and exergy efficiency of a two-tank TES system are high, and well understood. This design places few constraints on the power block and solar receiver because thermal energy is provided at roughly constant conditions. However, thermocline, PCM, and thermochemical systems are more likely to output fluctuations in HTF temperature during their operational cycles. The impact of such variations is not tracked here, but can be important to overall plant performance and must be understood.

Discussion

Results from the two-tank sensible storage analysis show that the optimal temperature for meeting the SunShot TES cost goal of \$15/kWh$_{th}$ is the maximum allowable temperature for a stainless steel alloy tank wall in contact with a molten salt storage fluid. For this analysis, that temperature was assumed to be 650°C. At 650°C, the SunShot cost goal can be met using a molten salt that has a heat capacity of 2.25 J/gK or a factor of 1.5 times the heat capacity of the $NaNO_3/KNO_3$ mixture. Carbonate mixtures are thermally stable at these temperatures and some formulations may have the required heat capacity. If salt formulations with heat capacities in the range of 3.75 J/gK can be identified, sensible storage systems with operating temperatures in the range of 500°C to 650°C will meet the SunShot cost goal. The operating temperature range for the supercritical steam cycle is 600°C to 700°C and 550°C to 800°C for the supercritical CO_2 cycle (Figure 1), so there is good overlap between the optimal sensible storage temperature range and the operating temperature ranges for these advanced cycles.

Identifying or developing molten salt formulations that have heat capacities in the range of 2.25 to 3.73 J/gK can be accomplished in two ways. Using our thermodynamics database software

tools, we may be able to identify salt compositions that are thermally stable in this temperature range and that have the required heat capacity. These tools should allow us to identify specific compositions or composition ranges that show promise for meeting these requirements. Testing compositions in NREL's Materials Laboratory will validate the software tool predictions. The heat capacities of promising compositions may be enhanced with the addition of micro- or nano-scale particles to obtain the required heat capacity to meet the cost goal. In addition, we need to develop a similar methodology to the two-tank, molten salt model to estimate the cost of thermocline storage as a function of temperature. These specific research activities are included in the FY12 operating plan.

Cost methodologies for PCM and thermochemical storage systems were outlined and summarized in this work. Before a cost analysis of PCM storage can be completed, a PCM system will need to be specified as outlined in this report. The number of stages, including phase-change temperatures and enthalpies, needs to be specified. PCMs for each stage, including material properties, need to be identified. Basic heat transfer analysis will determine the specifications for the heat exchanger, or geometry of the packed bed if encapsulated PCMs are used. Vapor pressure of the HTF will also factor into the design of the heat exchanger. Complete specification of the storage system will allow material quantities, material costs, and component costs to be determined, which will lead to a total installed cost for the system.

Performing a complete cost analysis for thermochemical storage adds still more complexity. Many thermochemical cycles have been identified and investigated for thermal storage. These cycles typically have kinetic limitations that affect the storage energy and power densities of the system. Any thermochemical cycle needs a solar receiver/reactor, in which the endothermic reaction occurs, and a heat exchanger(s) for heat rejection. These components are normally not included in the thermal storage system for cost analysis but are critical for thermochemical storage. To fairly determine the cost of thermochemical storage, certain components may need to be omitted from the analysis even though they are required for the storage system. A cost comparison standard will need to be developed for thermochemical storage to compare its costs to those of sensible and PCM storage systems.

Future Work

We have several activities planned in FY12 that will be follow-on work to this report. For sensible storage, the cost analysis is complete and we will focus our work on identifying salt compositions that have the desired material properties to meet the SunShot cost goal. We plan to:

- Use NREL's thermodynamic database software tools to identify salt compositions that are thermally stable in the optimal temperature range for sensible storage
- Use NREL's Materials Laboratory to measure and validate the properties of theses compositions
- Continue work in nanofluids to identify nanomaterials that significantly enhance the heat capacity of storage fluids,

- Develop a similar methodology to estimate the cost of thermocline storage as a function of temperature.

For PCM storage, the cost methodology has been outlined but specific cost analysis must be completed. We plan to:

- Specify a complete PCM storage system, including number of stages and material requirements for each stage—stages may consist of monolithic or encapsulated PCMs
- Identify promising PCM candidates for each stage
- Conduct computational fluid dynamics heat transfer modeling to determine the basic design requirements for the heat exchanger
- Specify the heat exchanger tubing material and schedule based on PCM compatibility and HTF compatibility and vapor pressure
- Estimate material quantities, components, and costs for the total system and calculate total installed cost
- Develop a fully-integrated CSP plant model that includes PCM storage to evaluate the annual performance of a candidate PCM storage system and determine its effects on full-plant performance.

For thermochemical storage, the cost methodology has been outlined but more work is needed to complete a basic cost analysis. We plan to:

- Identify a basic thermochemical cycle that is compatible with the operating temperature, pressure, and HTF of the advanced cycles
- Define all of the process components required to perform the cycle
- Define the boundaries between the storage system itself and other power plant subsystems
- Specify the reactor and storage tank materials based on reactant and HTF compatibilities and pressures
- Specify the heat exchanger tubing material and schedule based on reactant and HTF compatibilities and pressures
- Estimate material quantities, components, and costs for the total system and calculate total installed cost.

All of the work that is outlined is included within the planned tasks for FY12.

References

1. U.S. Department of Energy. (2011). *SunShot Initiative*. Website: www1.eere.energy.gov/solar/sunshot/. Accessed July 7, 2011.
2. U. Herrmann, D. Kearney. (2002). *J. Solar Energy Eng.* **124**, 145.
3. G. Glatzmaier. (2011). *Summary Report for Concentrating Solar Power Thermal Storage Workshop*, NREL Technical Report: NREL/TP-5500-52134.
4. H.P. Garg, S.C. Mullick, A.K. Bhargava. (1985). *Solar Thermal Energy Storage*, D. Reidel Publishing Company, Dordrecht, Holland. 642 pp.
5. H. Price, D. Brosseau, D. Kearney, B. Kelly. (2007) *DOE Advanced Thermal Energy Storage Plan for Parabolic Trough Technology.*
6. C. Turchi. (2009). *Multi-Year CSP Thermal Storage Plan: FY2009 – FY2020.*
7. C. Kutscher, M. Mehos, C. Turchi, G. Glatzmaier, T. Moss. (2010) *Line-Focus Solar Power Plant Cost Reduction Plan,* NREL Technical Report: NREL/TP-5500-48175.
8. C. Turchi. (2010) *Parabolic Trough Reference Plant for Cost Modeling with the Solar Advisor Model (SAM),* NREL Technical Report: NREL/TP-550-47605.
9. G. J. Kolb, C. K. Ho, T. R. Mancini, J. A. Gary. (2011) *Power Tower Technology Roadmap and Cost Reduction Plan,* Sandia Report: SAND2011-2419
10. H. E. Reilly, G. J. Kolb. (2001). *An Evaluation of Molten-Salt Power Towers Including Results of the Solar Two Project,* Sandia Report: SAND2001-3674.
11. R.D. Smith. (1979). *Chemical Energy Storage for Solar Thermal Conversion, Final Report*, Sandia Report: SAND79-8198, 190 pp.
12. T.T. Bramlette, R.M. Green, J.J. Bartel, D.K. Ottesen, C.T. Schafer, T.D. Brumleve. (1976). *Survey of High Temperature Thermal Energy Storage*, Sandia Report: SAND75-8063.