Physical Modeling: Studies of Diffraction Focusing Wave Energy Conversion Devices

Michael E. McCormick, Ph.D., Sc.D., P.E.
Corbin A. McNeil Professor *Emeritus*
U. S. Naval Academy
and
Vice President, Engineering
Murtech, Inc.

Note

- Although the present paper deals with large-scale physical modeling of two wave-energy conversion devices, the software Star-CCM+ is recommended for those interested in the computational fluid dynamics modeling of the various wave-energy conversion devices. An example of the application of this software is shown on the next slide, Slide 3: wave-induced motions of a free barge towards a seawall.

U. S. Army Corps of Engineers, North Atlantic Division: Technical Report, 10 March 2010
Star-CCM+ CFD Software by CD-adapco

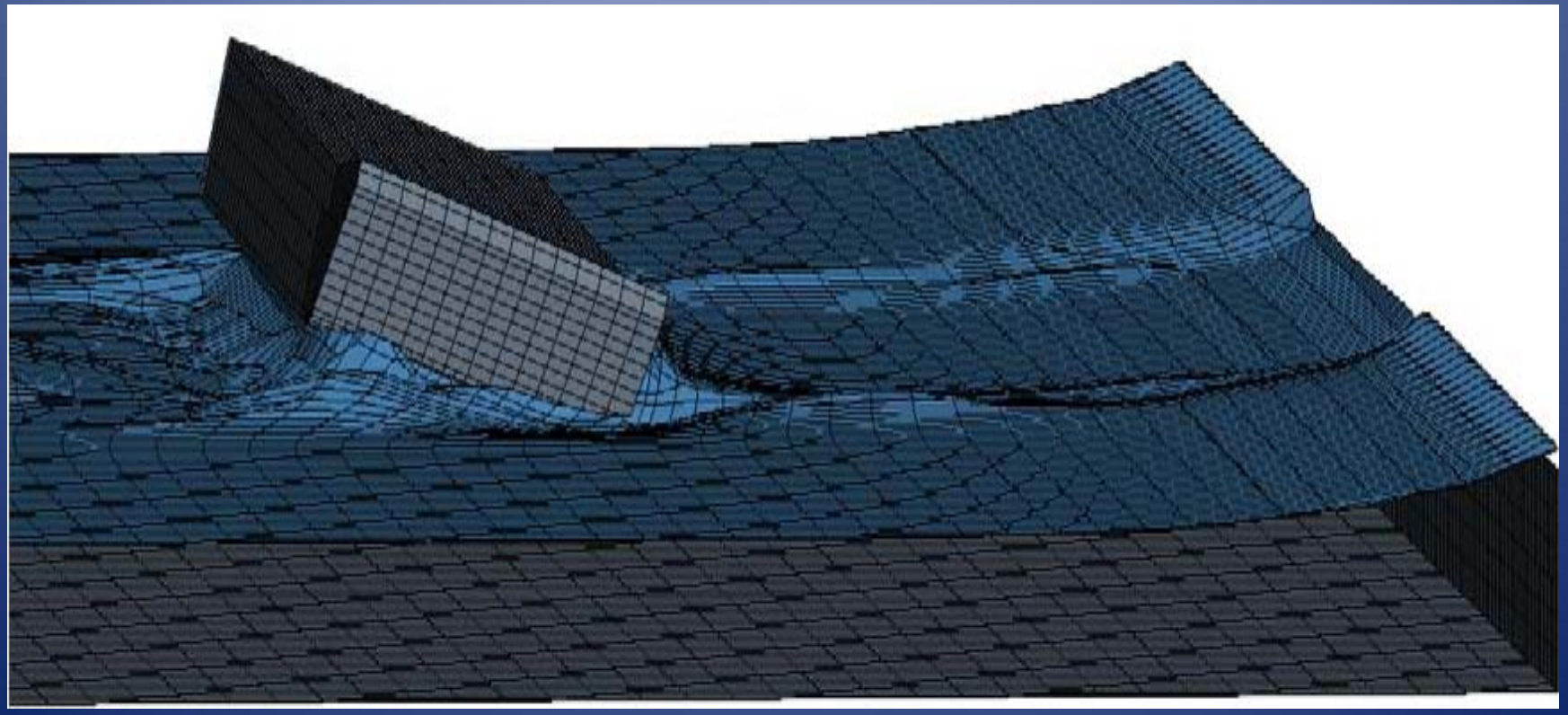

Diffraction Focusing

- Focusing of wave energy on a body resulting from destructive interference of radiated, reflected and incident waves
- Introduced to wave-energy conversion by K. Budal and J. Falnes in the mid 1970's
- Analyzed by J. N. Newman, C. C. Mei and others late 1970's and 1980's
- Phenomenon lead to the term "Point Absorber"
- Areal sketches in Slide 5 illustrate the phenomenon

Types of Diffraction Focusing: Areal Sketches of 3 Generic Devices

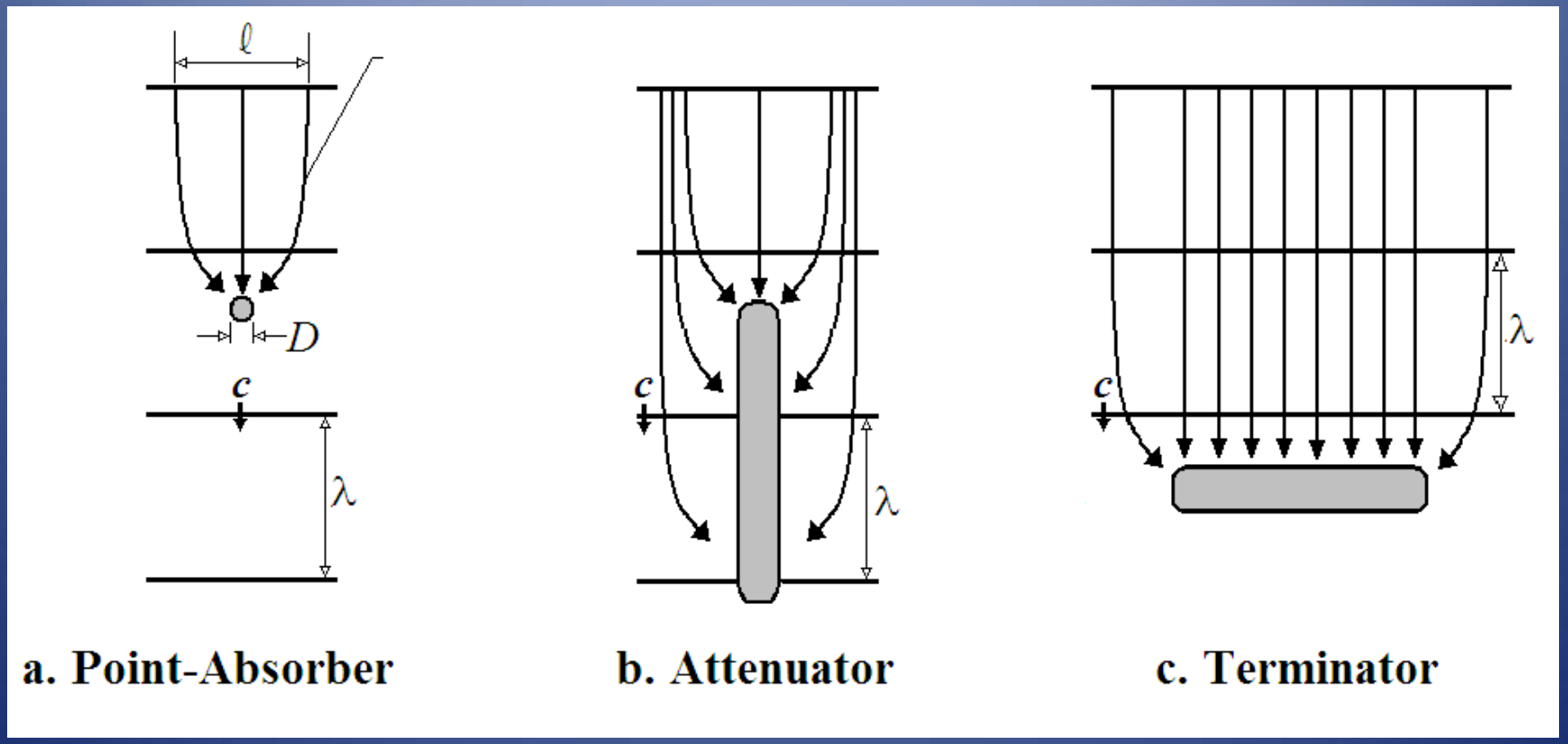

Purpose of the Presentation

In Slide 5, the point absorber, the attenuator and the terminator are introduced. The latter is more commonly used as a shoreline system. The purpose of the presentation is to deal with some of the practicalities involved with large-scale studies of diffraction focusing by point absorbers and attenuators.

The prototypes of the two are respectively presented in Slide 7.

The U. S. Naval Academy 117-meter wave tank was used in both studies. The tank is approximately 8 meters wide and 5 meters deep. Waves up to 1.0 meter in height and 3.3 seconds in period can be produced. Regular and irregular waves were used in both studies, although only the regular wave results are presented.

Buoy and Articulate Barges Systems: Systems of Interest

Heaving and Pitching Buoy System: The Bi-Modal Buoy

Articulated Barge System: The McCabe Wave Pump

The McCabe Wave Pump Attenuator

- The McCabe Wave Pump, shown in Slide 7, is a 140-tonne, 43m x 4m articulated-barge (attenuator) system that was deployed in the Shannon River Estuary (Ireland) from 1996 to 2004. The pitching motions of the forward barge of the three-barge system were found to far exceed those of the middle and after barges. This observation led to the single-barge experiment sketched in Slide 9.

Deep-Water Forward Barge Study – 1/4th to 1/3rd Scale

$1.67s < T < 3.33s$

$0.094m < H < 0.279m$

$1bar < p < 5bar$

$0.1\square/s < Q < 0.3\square/s$

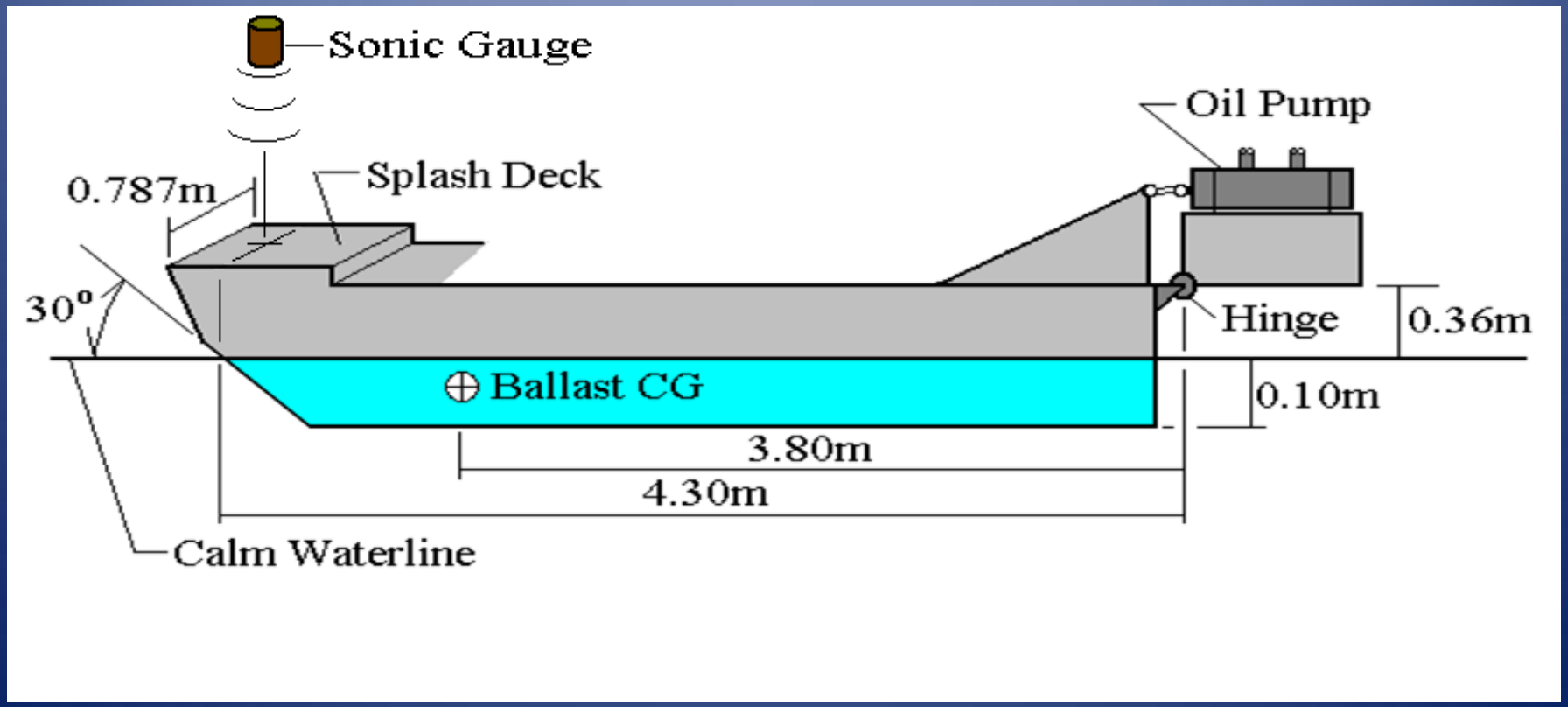

Articulated Barge Study Observations

The power take-off included a hydraulic pumping system. The time-averaged fluid power in the hydraulic system is shown in Slide 11 as a function of the body-length to wavelength ratio.

Turmec Engineering of Ireland determined that the threshold power required to excite the hydraulic pumps was about 36 Watts. This power value must be added to those on the previous graph to determine the total power absorbed by the system.

For $L < 0.3$ the values of the ratio of the total power and the wave power incident on the width of the system were 1.26 and 1.60. This attributed to diffraction focusing.

Although the scale of the experiment was relatively large, the scaling of the hydraulic takeoff system power is difficult, since both dry and fluid friction were present and significant in the study.

Wave-to-Pump Power fficiency

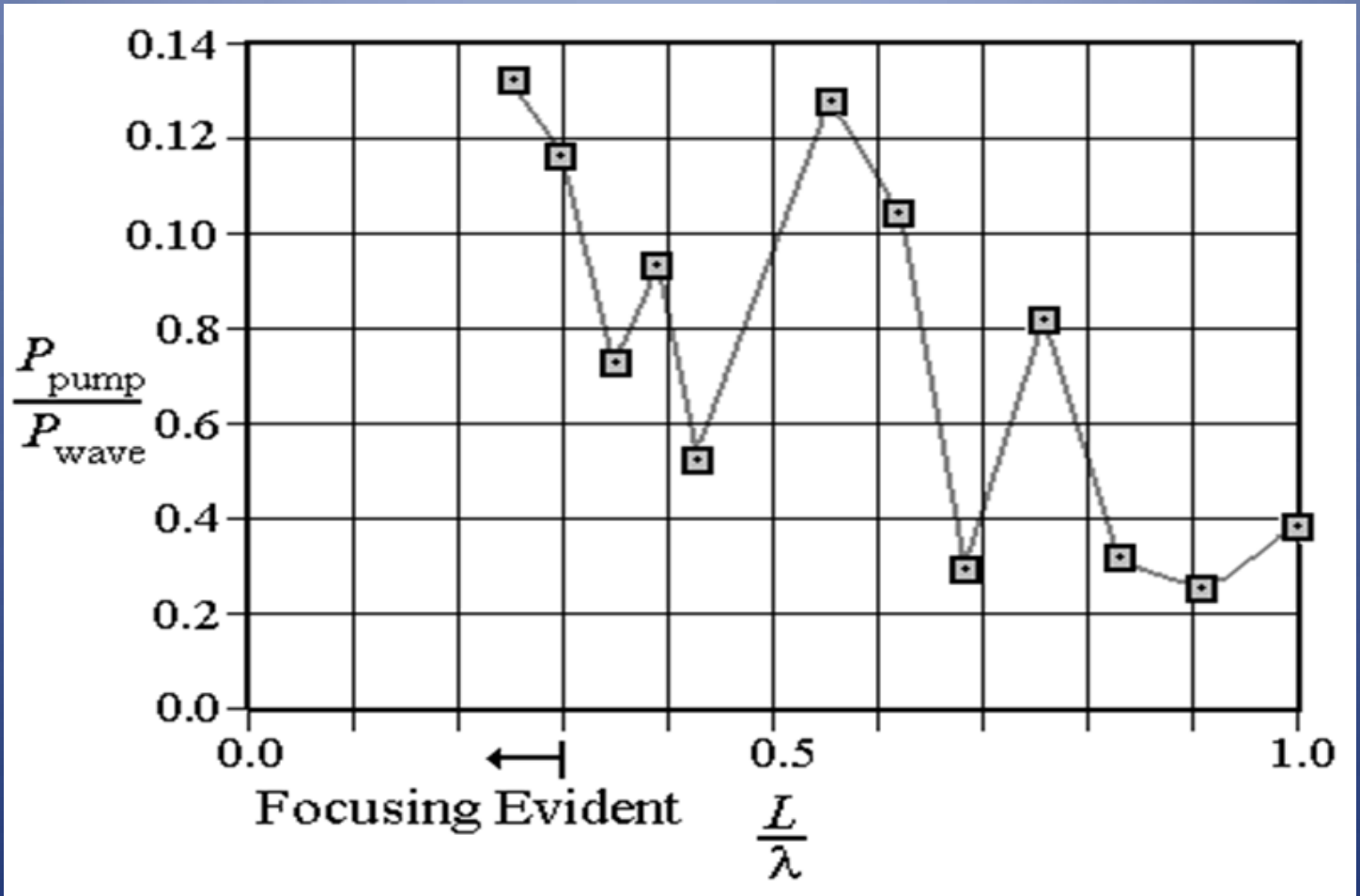

Bi-Modal Buoy Study

The second study involved a wave-tank study of a prototype of a bi-modal buoy equipped with side and bottom fins designed to partially dissipate the energy of the incident waves by wake losses.

The system is sketched in Slide 13, and the designed motions are illustrated in Slide 14.

An areal sketch of the tank set-up is presented in Slide 15.

Bimodal Buoy – Prototype Study

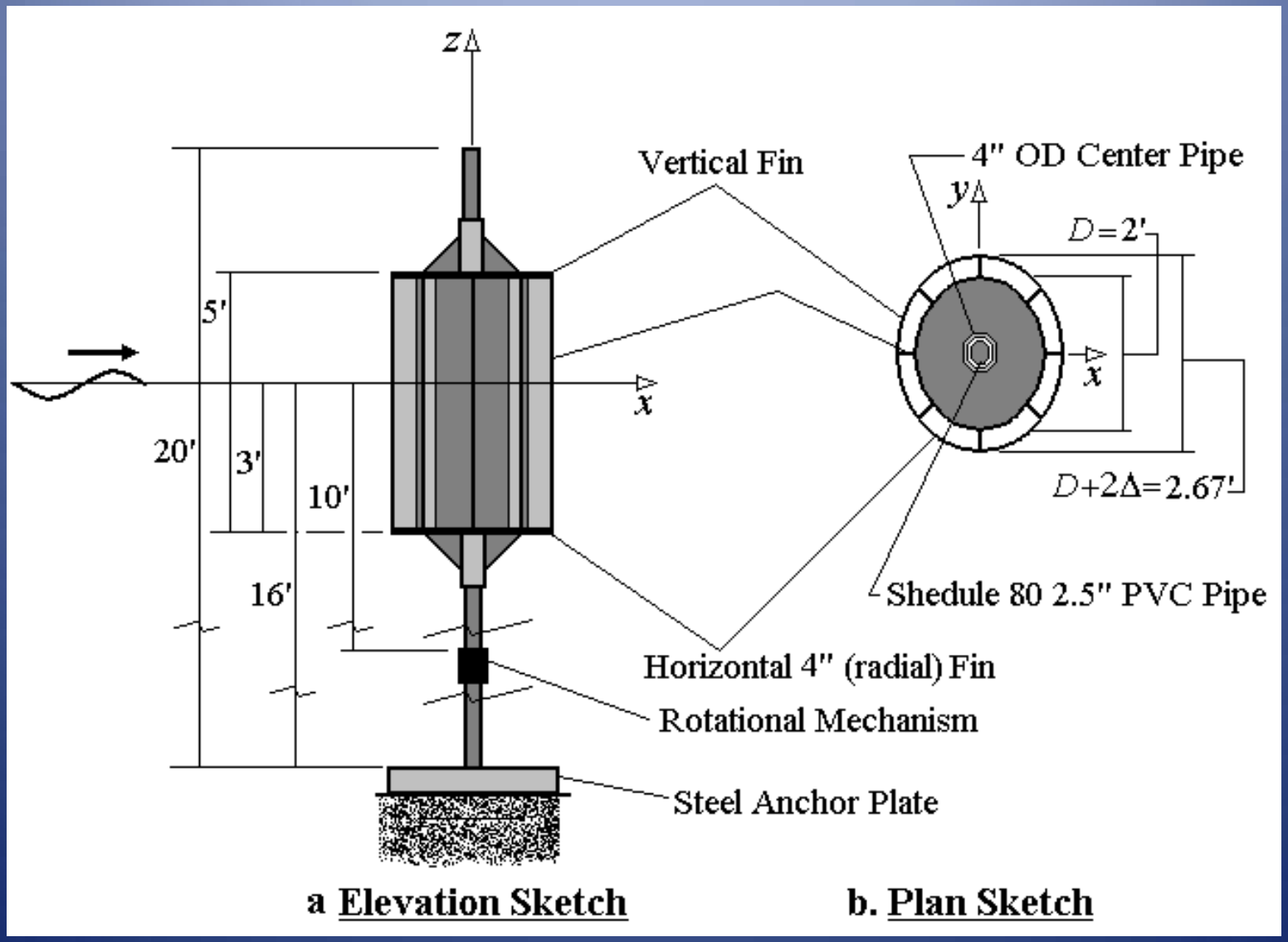

Bimodal Buoy Motions

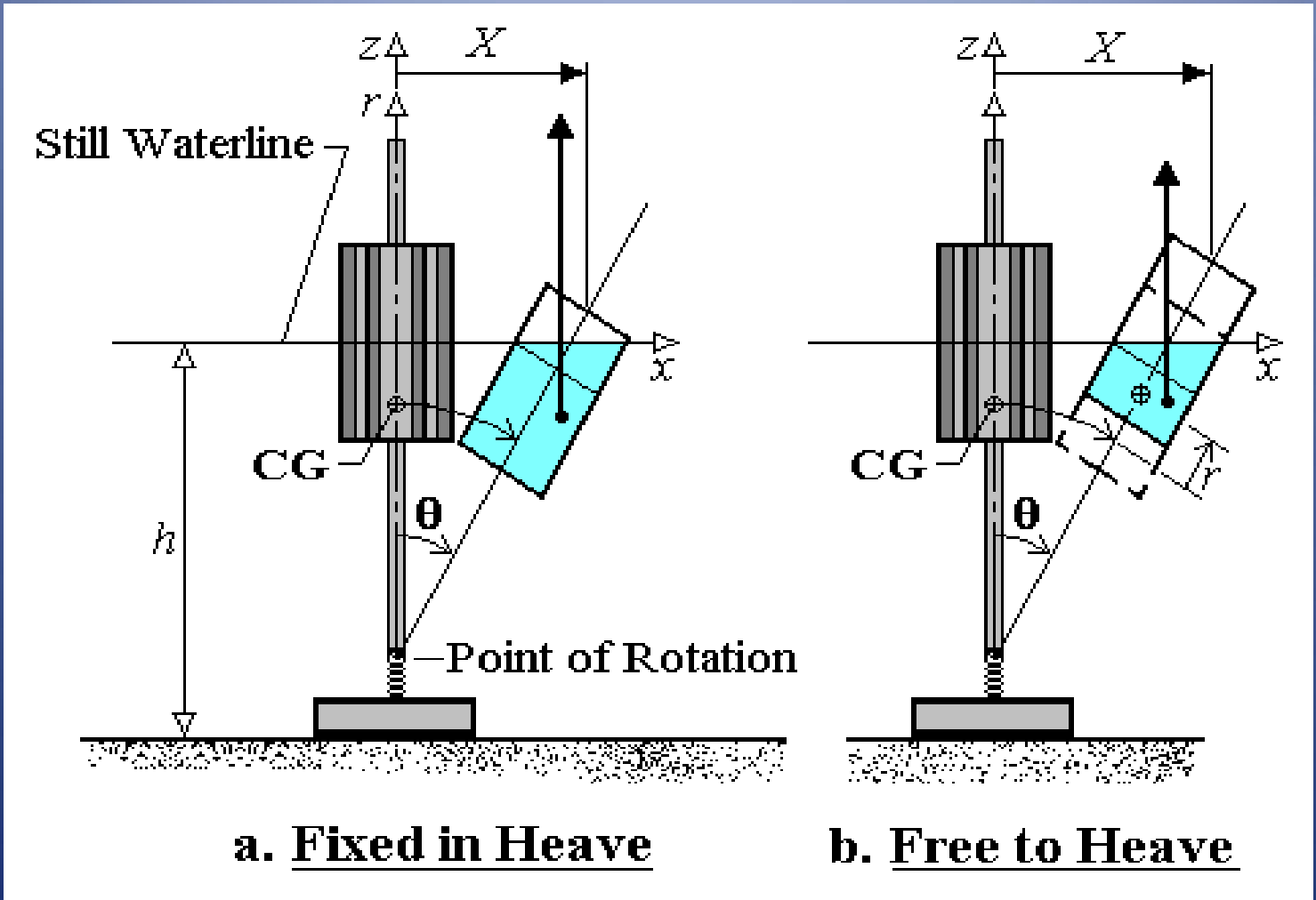

Areal Sketch of Wave Tank Setup

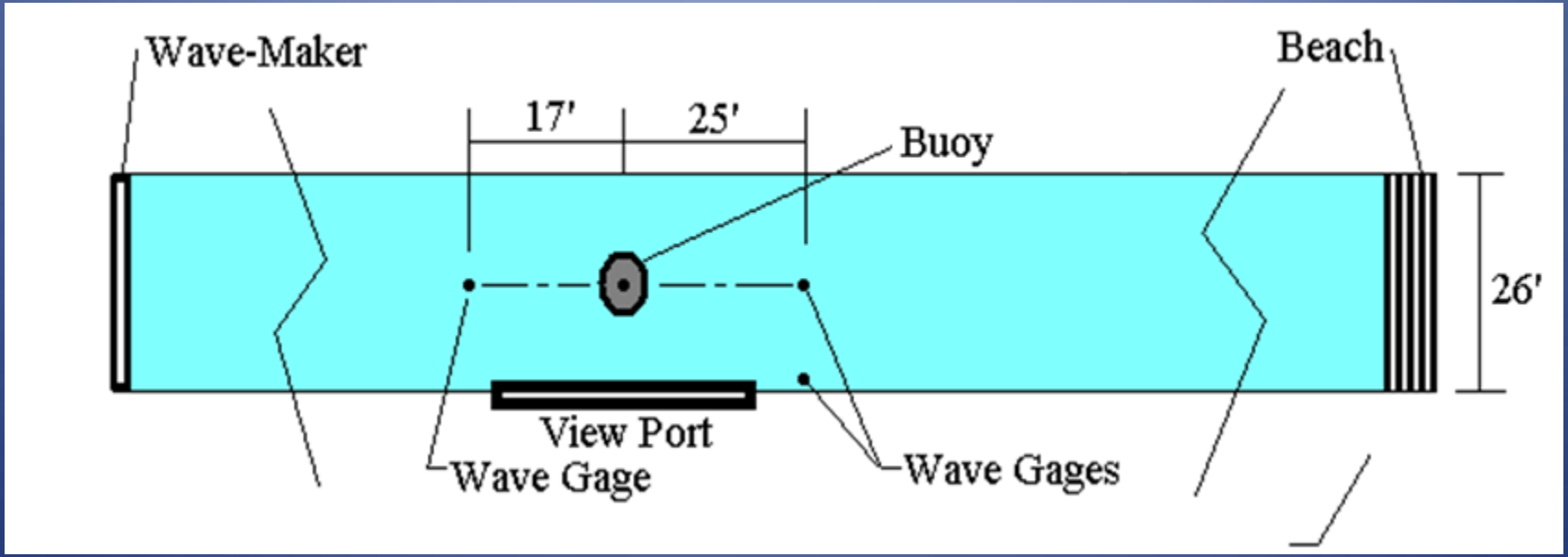

Bi-Modal Buoy Results

The time-averaged buoy motions are shown in Slide 17 as functions of the wave period, the latter ranging from 0.8 second to 3.3 seconds.

The damped natural pitching period well-exceeded 5 seconds, and that of the heaving motions was about 2.8 seconds.

Over most of the test spectrum, the pitching motions are dominant.

In Slide 18 are normalized buoy motions and the wave-height ratio (transmission coefficient) as functions of the float diameter and the wavelength. The down-tank wave heights are the averages of the center and side wave gauge readings.

Buoy Responses – Regular Waves

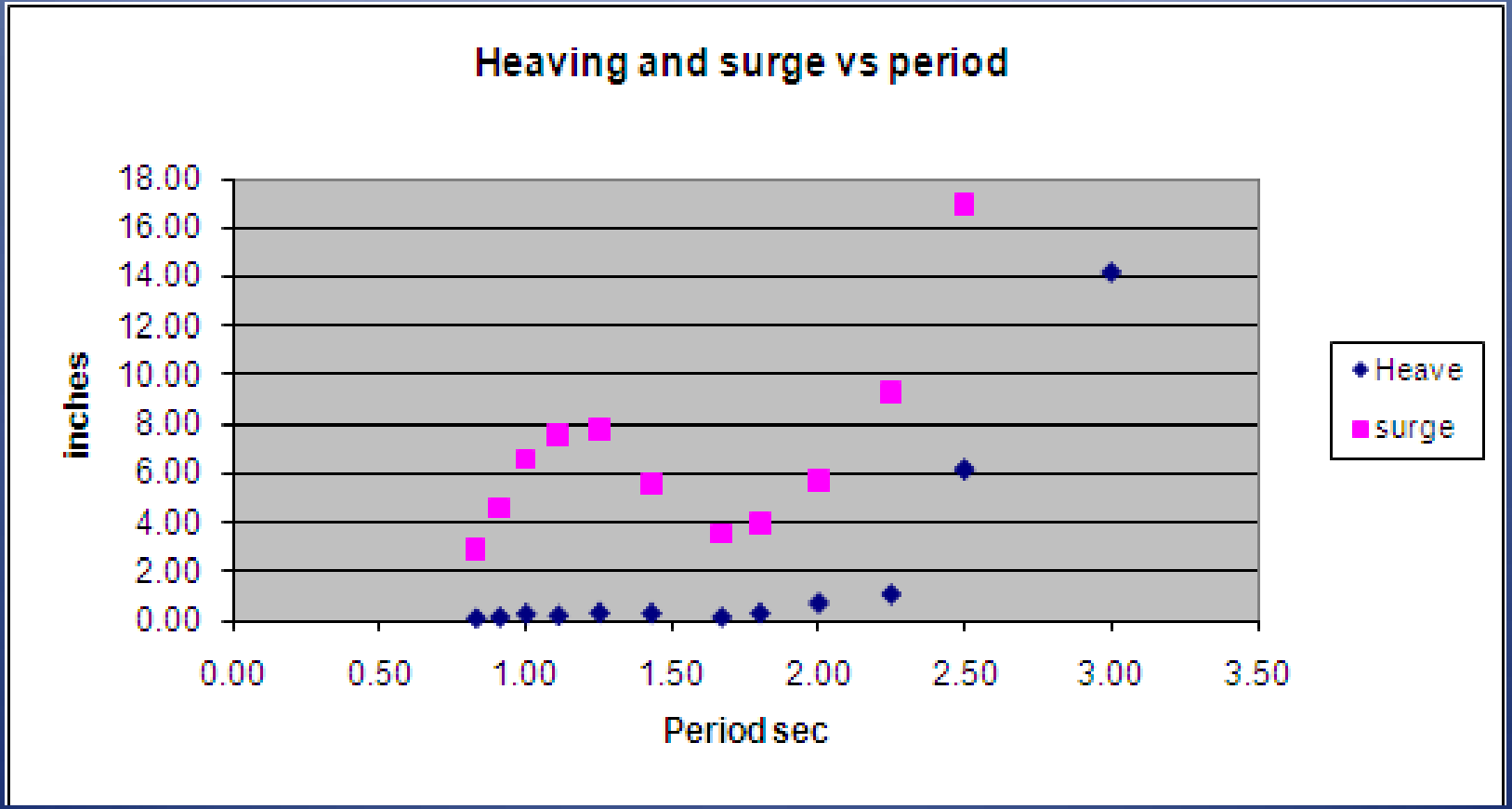

Forward/After Wave Height Ratio

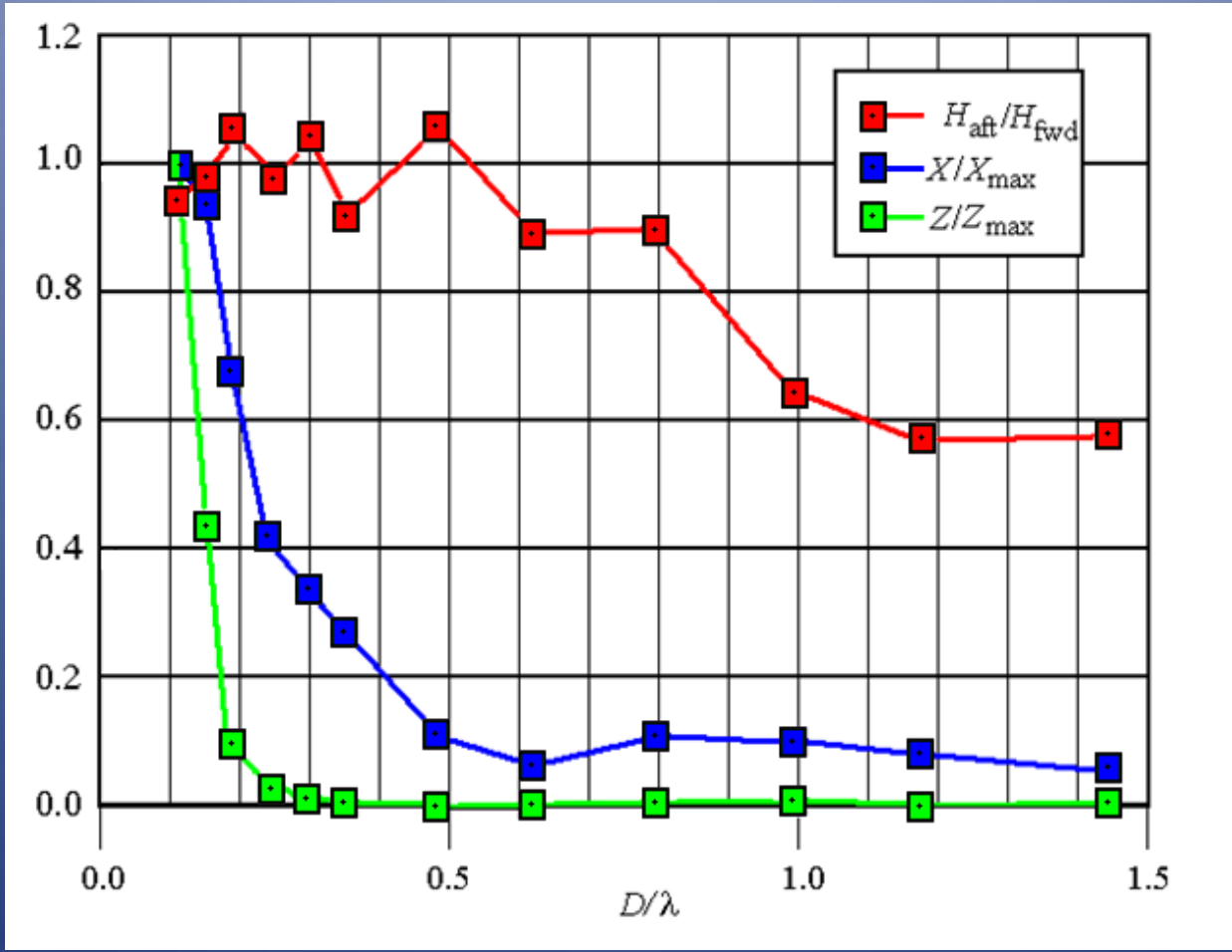

Observations and Conclusions

- **Attenuator Study**:
- 1. The damped natural period is above the period spectrum of test. This illustrates the limitations of large-scale tests. That is, large-scale resonance (our desired goal) is difficult to achieve, even in a large tank.
- 2. The side-walls of the tank are reflective; hence, each reflected wave pair (from both walls) simulates the addition of a pair of the system being studied. Fortunately, when those radiated waves arrive, there is a step in the motions data, and the effect is easily identified.
- 3. The scaling of the power take-off is most difficult. Not only are Froude and Reynolds scaling not compatible, for direct electrical conversion by linear inductance introduces other scaling problems occur.

Point Absorbers:

1. For the bi-directional buoy, the pitching motions dominate over two-thirds of the wave periods, as is evident in Slide 17.
2. Although the damped natural pitching period is well above the upper bound of the incident wave spectrum, low-period radiation results in focusing. This conclusion was questioned. If the absorbed wave energy in the beam (fin to fin) of the buoy is divided by the total incident wave energy, the resulting transmission coefficient is about 0.897. We note that the last three values of the coefficient are less than 0.7 for the shorter waves in Slide 18. This fact leads to the conclusion that diffraction focusing occurred.
3. The effect of the vortex shedding frequency has been raised. This will be investigated.
4. Since the primary energy extraction is due to viscous-pressure effects, scaling poses a problem.