NATIONAL RENEWABLE ENERGY LABORATORY

Blade Testing at NREL's National Wind Technology Center

PIX 17536

2010 Sandia National Laboratory

Blade Workshop

Scott Hughes

July 20, 2010

NREL/PR-500-48898

NREL is a national laboratory of the U.S. Department of Energy, Office of Energy Efficiency and Renewable Energy, operated by the Alliance for Sustainable Energy, LLC.

NREL Turbine Test Capabilities

- Field testing
  - Demonstrates advances in control systems, load alleviation, innovative technology
    - MW-scale turbines
    - Small and mid-size turbines
- Drive train testing
  - 225 kW dynamometer
  - 2.5 MW dynamometer
  - 5 MW dynamometer by 9/2012
  - Grid integration upgrade
- Blade testing – Wind and Water
  - 3 test labs at NWTC, up to 50m blades
  - 90-m blades at Massachusetts blade test facility

PIX 17398

PIX 17244

Why Test Blades?

- Blade reliability identified as significant O&M cost
- Minimize risk of field failures
- Testing is a certification requirement
  - Withstand the design/test loads
  - Identify manufacturing weaknesses
- Validate model data with empirical values
  - Proof of concept and prototype testing
  - Stress and strain
  - Stiffness / deflection
  - Ultimate static strength
  - Design life verification

PIX 16392

Advancing Blade Test Methodology

- Goal
  - Attain high levels of blade and rotor system reliability through advanced test methods
  - Reduce the cost and time of testing
- Approach basis
  - 30 years of blade testing experience at the NWTC
    - Design innovative test system hardware
    - Advanced test methods with fast, low-cost deployment
    - Collaborations with federal labs, industry, and academia

PIX 14707

PIX 11073

PIX 16269

NWTC Blade Test Capabilities

- Testing facilities
  - IUF – Blades to 50 m
  - Building A60 – Blades to 19 m
  - Building 251 – Blades to 19 m
- Typical test sequence
  - Static testing
  - Fatigue testing
  - Property testing (modal, mass distribution)
- ISO/IEC 17025, A2LA accredited for full-scale blade testing
- Subcomponent Testing

Certification Testing

Static Testing

- Tests the ability of the blade to withstand design load cases
- Typically applied in 4-6 load vectors
- Load application through quasi-static methods
  - Cranes
  - Ballast Weights
  - Winches
  - Hydraulic actuators

Fatigue Testing

- Lifetime verifications
  - 20-year blade life on the order of $1x10^9$ in-field cycles
  - Laboratory testing accelerates loading through increasing load magnitude
- Methods
  - Single-axis
  - Dual-axis
  - Forced Displacement
  - Resonant

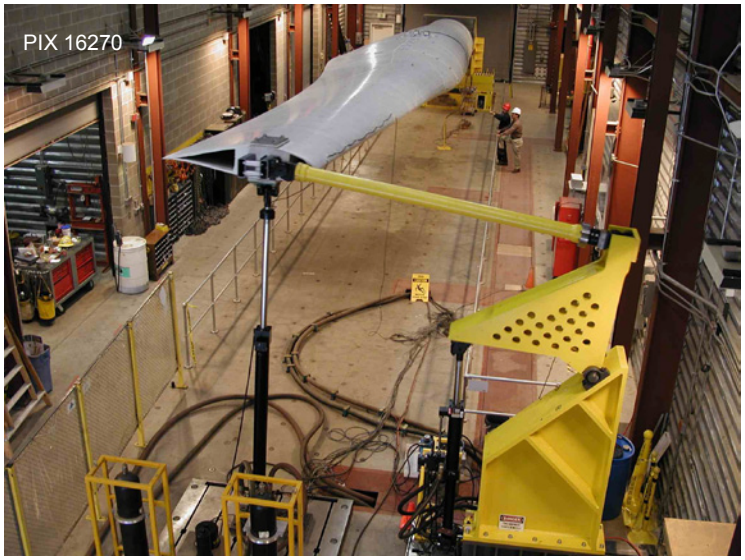

135 Full-scale blade tests have been conducted at the NWTC

Test Method Development

- Limitations of current test methods
  - Blade failures continue despite current testing practices
  - Complete testing time increases as blades get longer
  - Current test practices not representative of in-field loading
- Research and Development to improve test efficiency
  - Dual-Axis Resonant Testing (UREX)
  - Phased-Locked Dual-Axis Testing (PhLEX)
  - Base Excitation Testing (BETS)
- Assessment of test methods with field experience

Test Method Development

PIX 16270

PIX 17639

Continual improvement in test characteristics

PIX 17641

Test cost and test time

PIX 12894

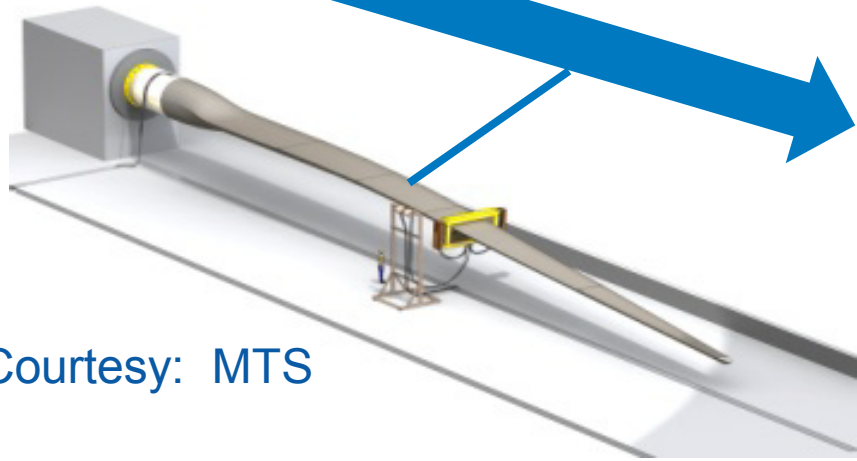

Courtesy: MTS

Universal Resonant Excitation (UREX)

- Applies dual-axis fatigue loads at multiple resonant frequencies
- Prototype demonstrated on a 9-meter blade at NREL
- Commercialized version has been developed with MTS
  - Modular, scalable
  - Up to 2000-kg of oscillating mass at 0.15-meters of stroke
  - Multi-station capability
- Developed for use at the WTTC facility
- Demonstration on MW-scale blades Fall 2010
- Technology deployed to testing facilities worldwide

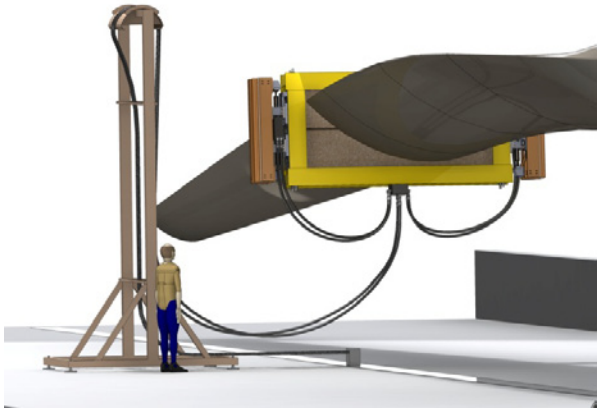

UREX on blade. Courtesy: MTS

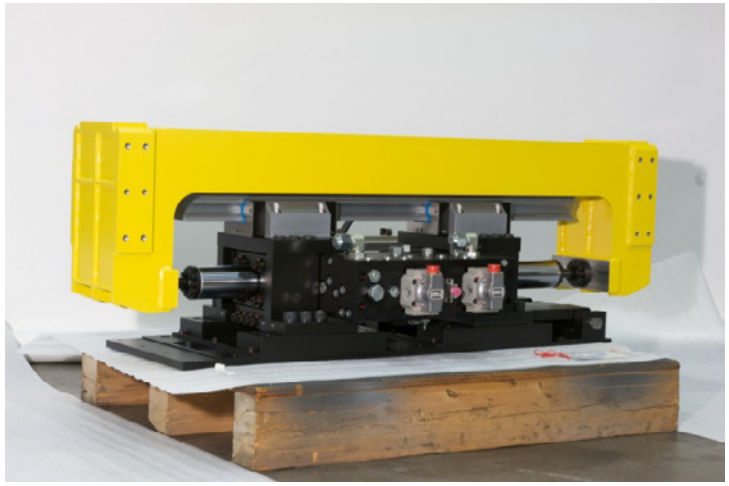

PIX 17637

MTS UREX. Courtesy: MTS

Phase-Locked Excitation (PhLEX)

- Control actuator stiffens system in the flapwise direction until the natural frequencies in both flapwise and edgewise directions are approximately equal
- Minimize point-load forces introduced by actuators
- Faster, more efficient resonant testing with ideal cycle-to-cycle load and phase control
- Prototype demonstration on a 9-meter blade fall of 2010

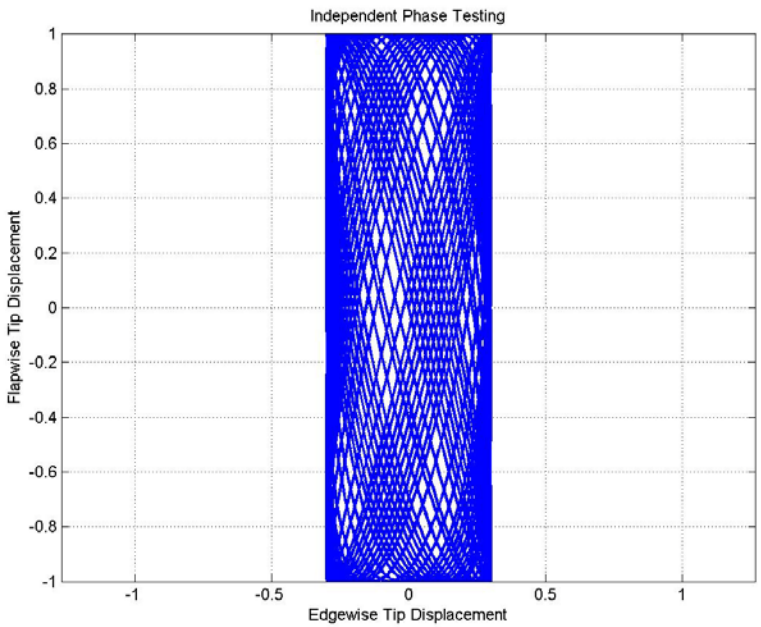

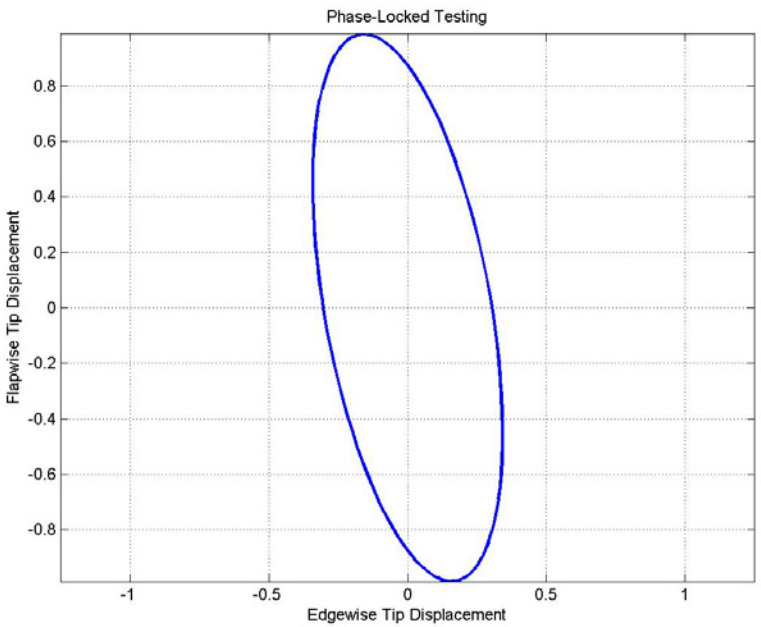

Base Excitation Test System (BETS)

- Design for applying dual-axis fatigue loads at multiple resonant frequencies
- Design for scaling to large blades
- Incorporate a flexible link at the root of the blade, which can be adaptable to existing test stand designs
- Prototype demonstration on a 9-meter blade at NREL in the Fall of 2010

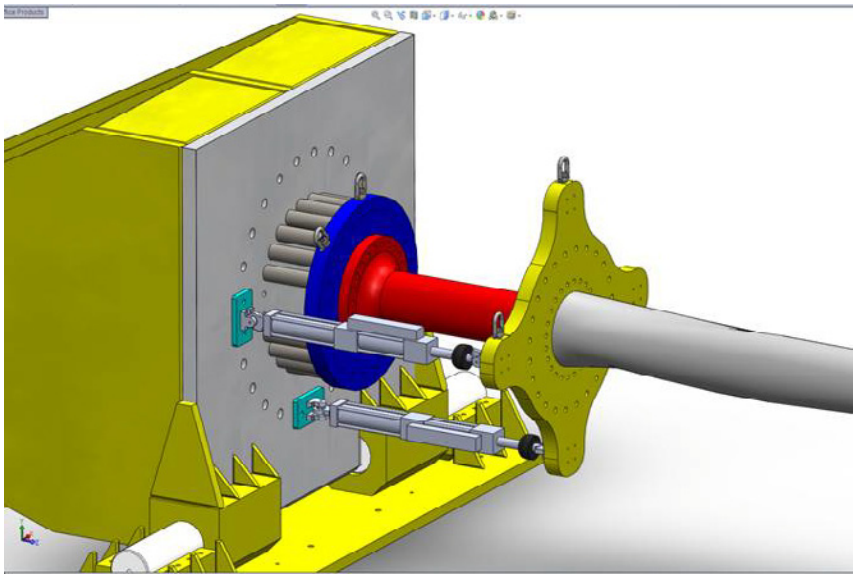

Static Testing Development

- Specification and development WTTC equipment
  - MTS UREX specifications
  - MTS static loading equipment specifications
- $2M of MTS test equipment supplied to WTTC by January 2011
- NREL contact Dave Snowberg, david.snowberg@nrel.gov

Static test setup
Courtesy: MTS

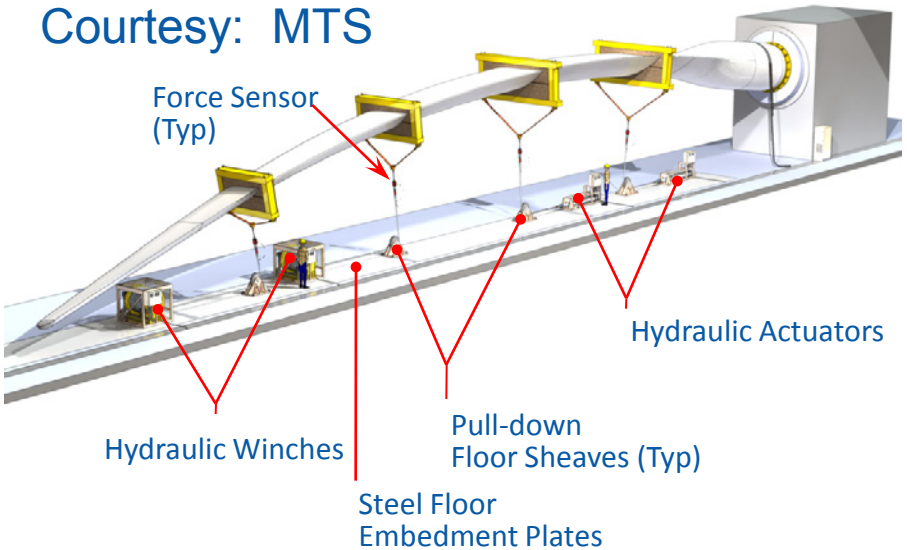

PIX 17636

Winch module
Courtesy: MTS

Blade Test Data Acquisition Development

- Advanced NI distributed hardware
  - Short analog wires for reduced noise
  - Simplified test setup
- Records hundreds of channels at high sample rates (up to 5 kHz each)
  - Eigenfrequency analysis
  - Capture transient events

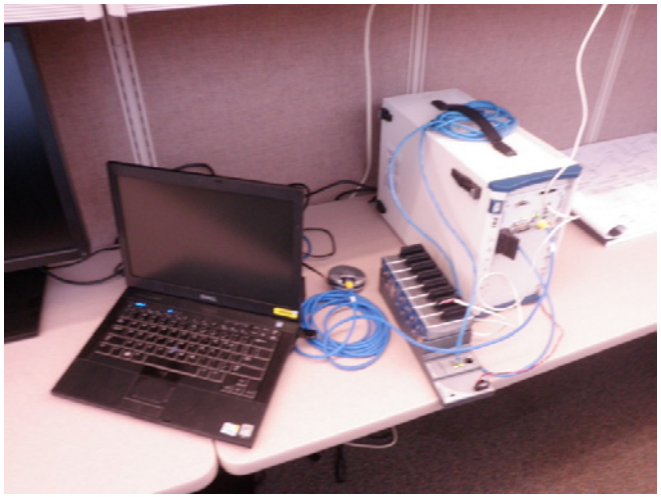

PIX 17638

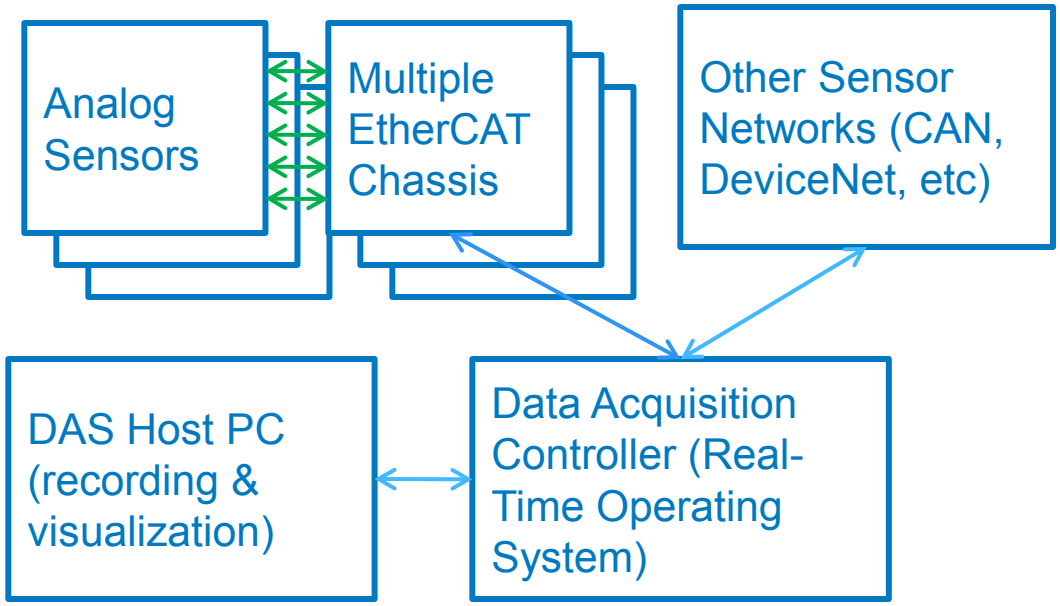

- NWTC customized software
  - Real-time monitoring of equivalent fatigue damage
  - Automated event detection
  - Virtual channels for quality control and display

Test Design Code: BladeFS

Developed to analyze and optimize blade test setup

- Modules for both static and fatigue tests
  - Test load calculation
  - Deflection prediction (discrete beam analysis)
  - Layout optimization for load introduction
- Graphical user interface
- Excel input file
- Word and Excel output files

http://wind.nrel.gov/designcodes/simulators/BladeFS/

Contact Michael Desmond:
michael.desmond@nrel.gov

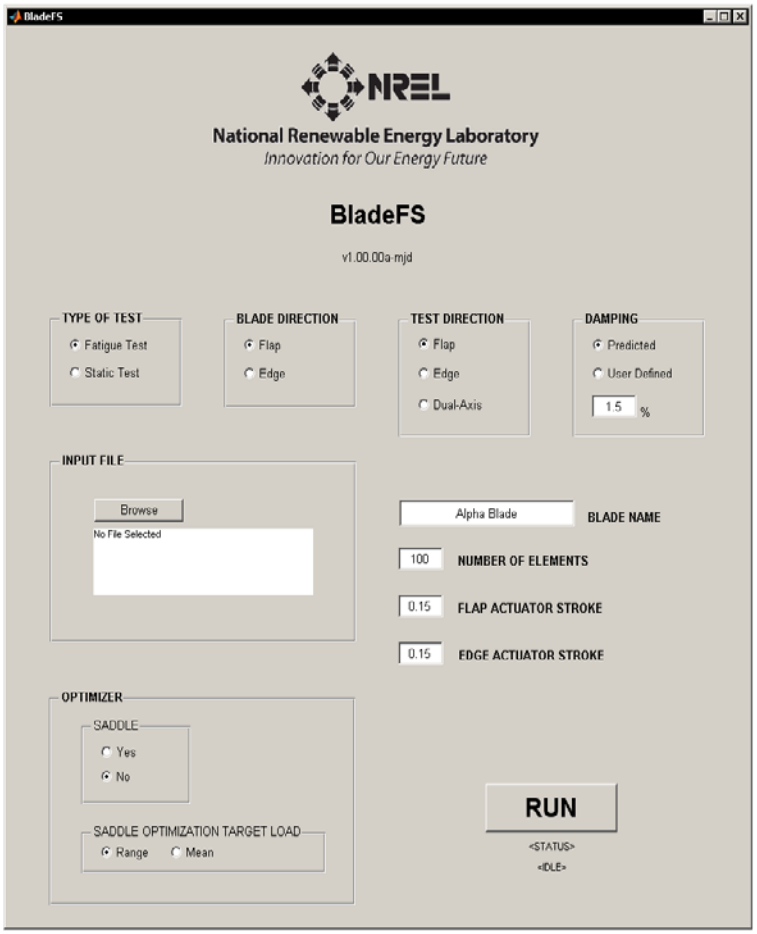

Sandia Sensor Blade Testing

- Collaborative test with SNL to demonstrate internal accelerometers and CM systems
- Blade tested in fatigue to failure, test collaborators to provide summary of results
- CM/NDE test collaborators
  - Los Alamos National Labs -Macro Fiber Composite actuator/sensor waveform
  - UMASS – Lowell – Digital Image Correlation
  - Luna Innovations – Fiber Optic Strain
  - Micron Optics – FBG fiber optic strain
  - Intelligent Fiber Optic Systems- fiber optic strain
  - NASA – Piezoelectric actuator/sensor waveform measurement
  - Laser Technology Inc - Shearography

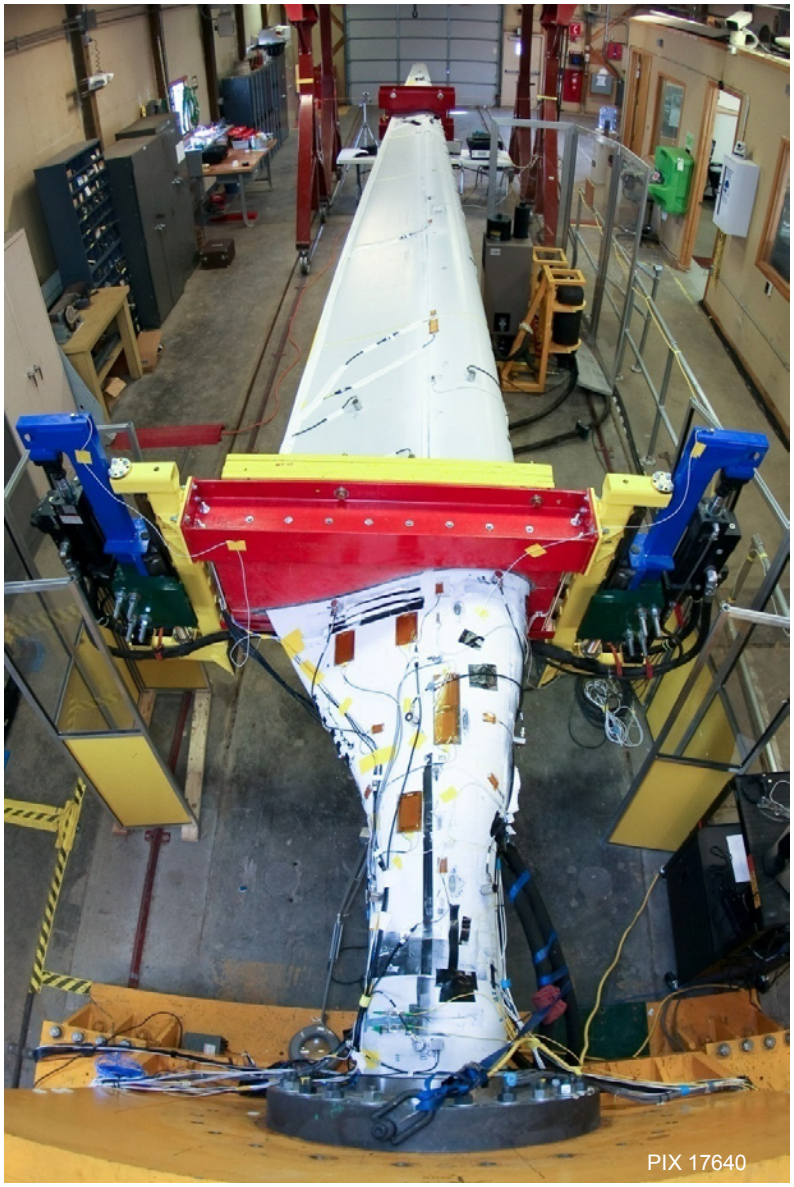

WTTC Commissioning

- Objective
  - Demonstrate new facility capabilities with a MW-scale blade test
  - Optimize and validate test methods

- NREL solicits feedback from blade manufacturers and suppliers on effective means to conduct initial test to commission facility

- Approaches under consideration
  - Competitive CRADA solicitation
  - WTTC/NREL cost-shared demonstration blade test
  - Purchase of test blade

Technical contact is Derek Berry: derek.berry@nrel.gov
Business contact is Rahul Yarala: ryarala@masscec.com