Accelerated UV Test Methods for Encapsulants of Photovoltaic Modules

Michael D. Kempe

National Renewable Energy Laboratory,
1617 Cole Blvd. Golden, CO 80401

NREL/PR-520-43309
Presented at the 33rd IEEE Photovoltaic Specialist Conference held May 11-16, 2008 in San Diego, California

Encapsulant Selection Criteria

- Optically Couples Glass to Cells
  - High Photon Transmission.
  - Can’t Yellow Significantly Over Time.
- Cost Must Be Balanced With Performance.
- Must Provide Good Adhesion.
  - Resistant to Heat, Humidity, UV Radiation, and Thermal Cycling.

Light Transmission is Vital for Encapsulant Selection

$$T = T_{glass} \; e^{-(t_p \alpha_p)}$$

T_{glass} = 88.94% and is the transmission through 6.35 mm plate glass.

t_p is the polymer layer thickness

α_p is the solar weighted photon absorptivity in the polymer.

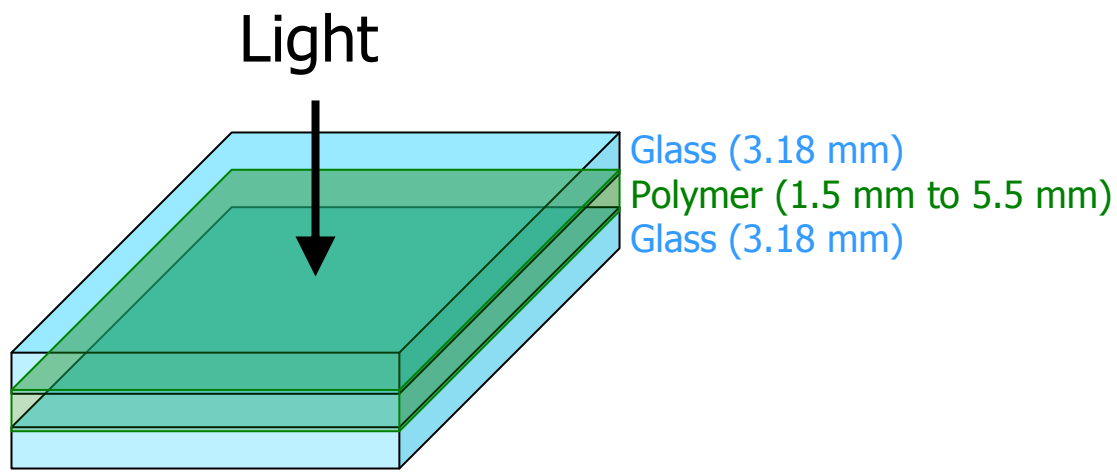

$$T_{cell} = \frac{(100 + T_{glass})}{2} e^{-(t_p \alpha_p)}$$

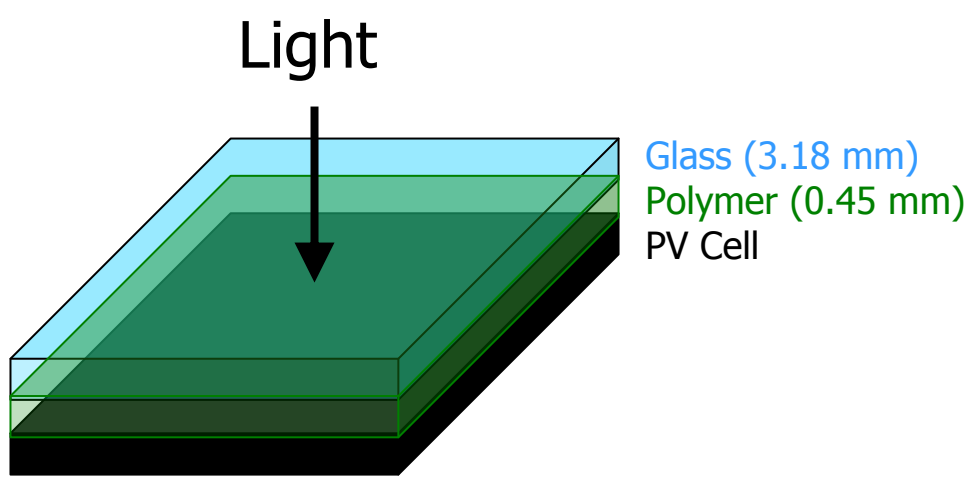

Cost and Photon Transmission are Important Selection Criteria

Encapsulant	AM 1.5 Solar Weighted Absorptivity 200 nm to 1100 nm	Transmission to Cells through 3.18 mm glass and 0.45 mm Encapsulant	Approximate Cost Relative to EVA	Comments
	(1/mm)	%		
GE RTV615	0.000 ± 0.003	94.5 ± 0.3	4.45	PDMS, Addition Cure
Dow Corning Sylgard 184	0.001 ± 0.004	94.4 ± 0.3	6.97	PDMS, Addition Cure
Dow Corning 527	0.001 ± 0.003	94.4 ± 0.3	2.33	PDMS Gel, Addition Cure
Polyvinyl Butraldehyde	0.014 ± 0.005	93.9 ± 0.4	1.50	
EVA	0.014 ± 0.005	93.9 ± 0.4	1.00	
NREL Experimental	0.025 ± 0.006	93.4 ± 0.4	1.28	
Thermoplastic Polyurethane	0.027 ± 0.004	93.3 ± 0.3	2.00	
Thermoplastic Ionomer #1	0.052 ± 0.007	92.3 ± 0.4	1.00	Copolymer of Ethylene and Methacrylic acid
DC 700	0.067 ± 0.004	91.7 ± 0.3	0.94	PDMS, Acetic Acid Condensation Cure
Thermoplastic Ionomer #2	0.147 ± 0.007	88.4 ± 0.4	2.00	Copolymer of Ethylene and Methacrylic acid

The approximate cost factor relative to EVA is based on costs quoted by the manufacturer where no effort was made to negotiate a better price. The true cost factor could easily be different by a factor of two.

Long Term UV Resistance Is NOT Evaluated in IEC Standards

- IEC 61215, 61646 and 61730-2
  - "UV Preconditioning Test"
  - 15 kWh/m^2 between 280 nm and 385 nm
    - Equivalent to 17.7 days of AM 1.5
  - >5 kWh/m^2 between 280 nm and 320 nm
    - Equivalent to 137 days of AM 1.5
- IEC 62108
  - "UV Conditioning Test"
  - 50 kWh/m^2 below 400 nm
    - Equivalent to 45 days of AM 1.5

Lap Shear Used to Evaluate Adhesion

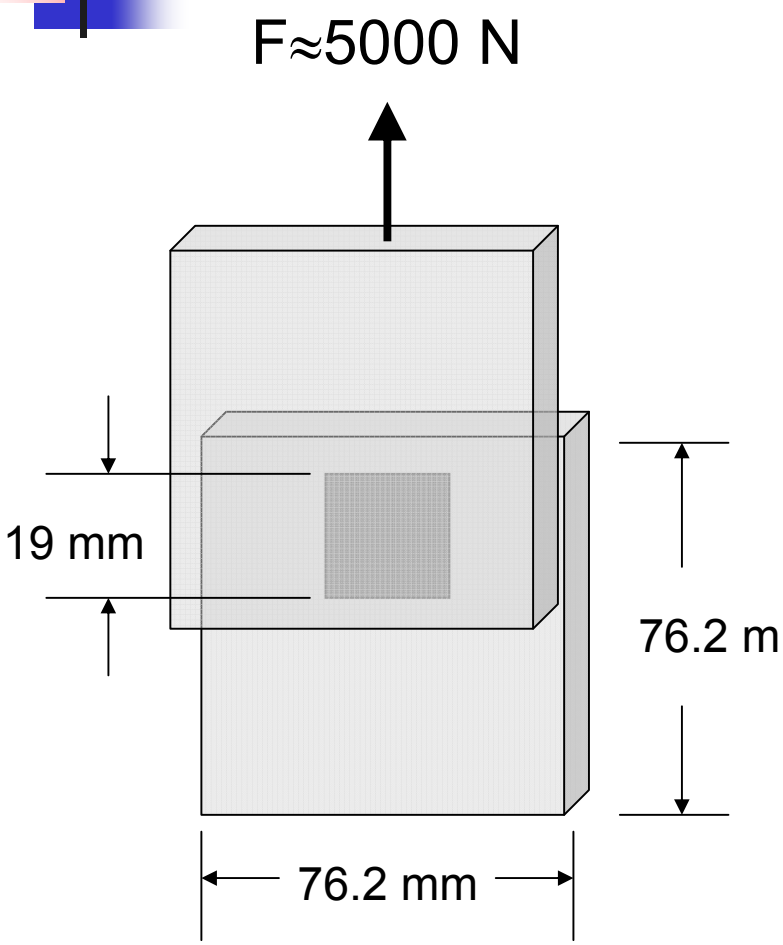

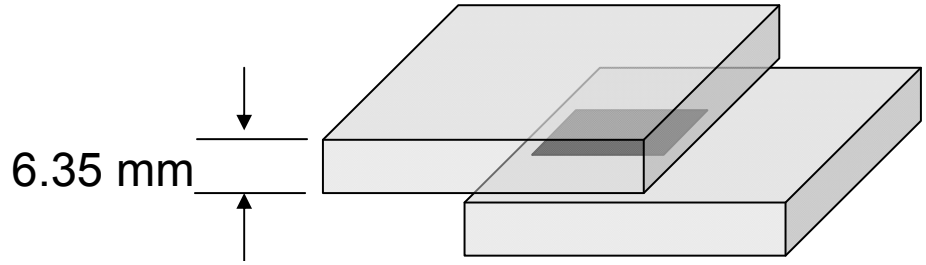

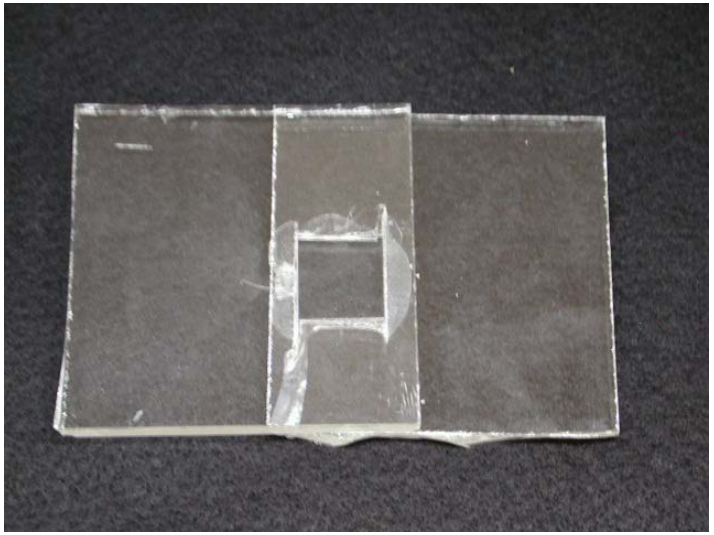

Schematic and photo of the lap shear design.

Ce Doped Glass Reduces UV-B

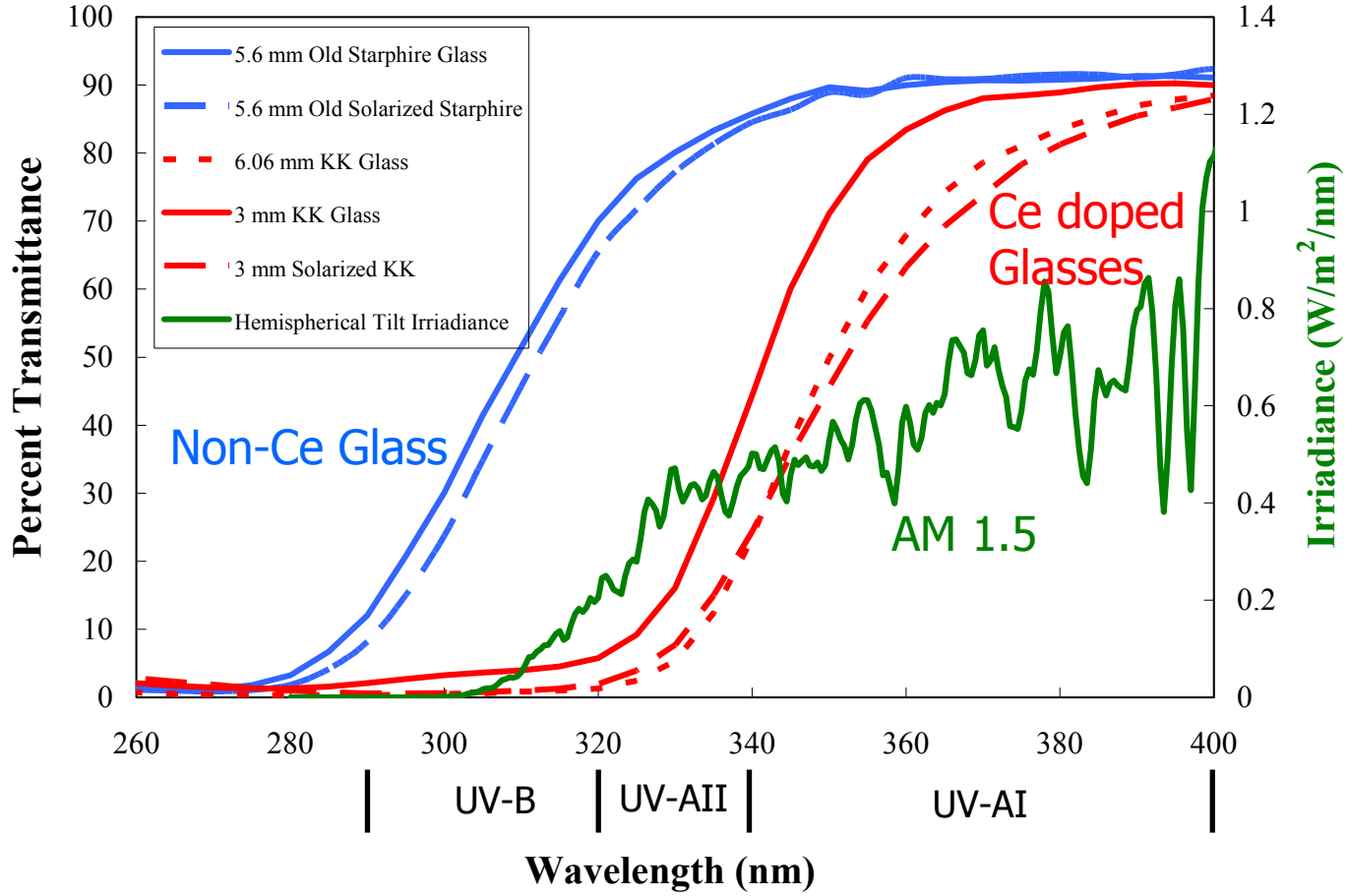

Samples labeled "solarized" had been exposed to 114 W/m^2 (300 nm to 400 nm) in a Ci4000 weatherometer at 60ºC and 60% RH.

UV-B/AII Radiation Reduces Adhesion 8 Times Faster

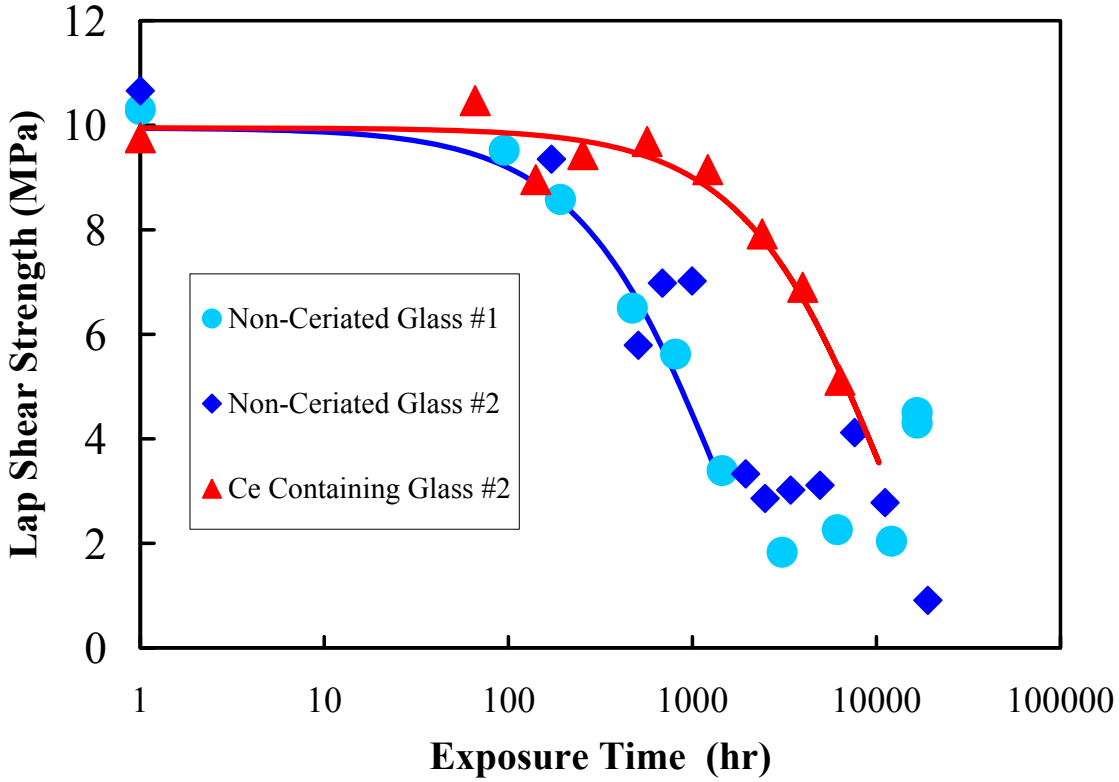

Lap shear strength after exposure to 60 ºC/60% RH/2.5 UV suns. Samples #1 and #2 refer to slightly different formulations from the same manufacturer.

High UV Light Transmission Increases Deadhesion

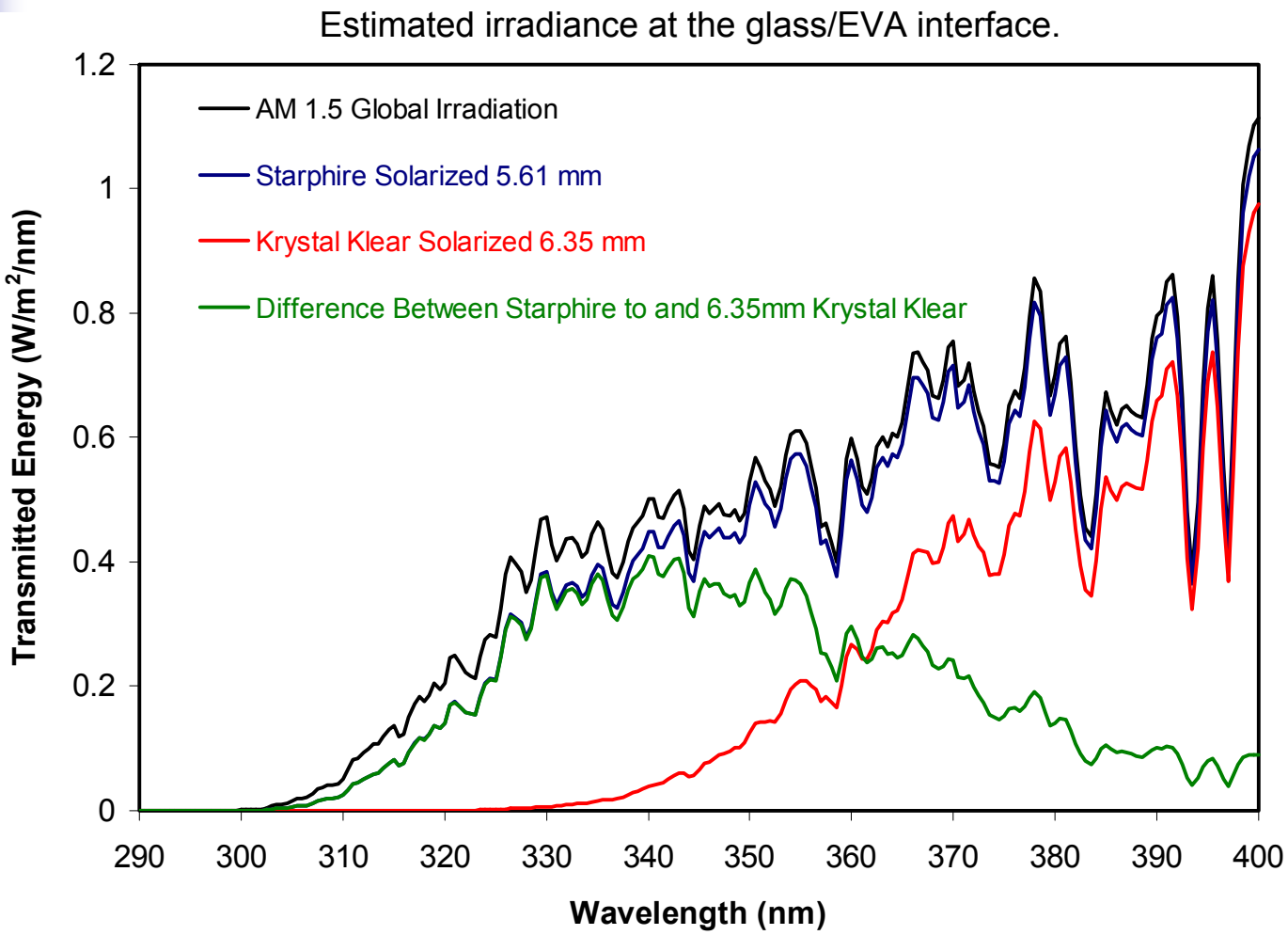

Greater Damage is Predicted for UV Transparent Glass

Action Spectrum

$$\left(\sim e^{-B\lambda}\right)$$

Activation Spectrum

$$E(\lambda) \sim I(\lambda)\lambda e^{-B\lambda}$$

Photon Damage

$$D \sim \int I(\lambda)\lambda e^{-B\lambda} d\lambda$$

B=0.07 (1/nm)

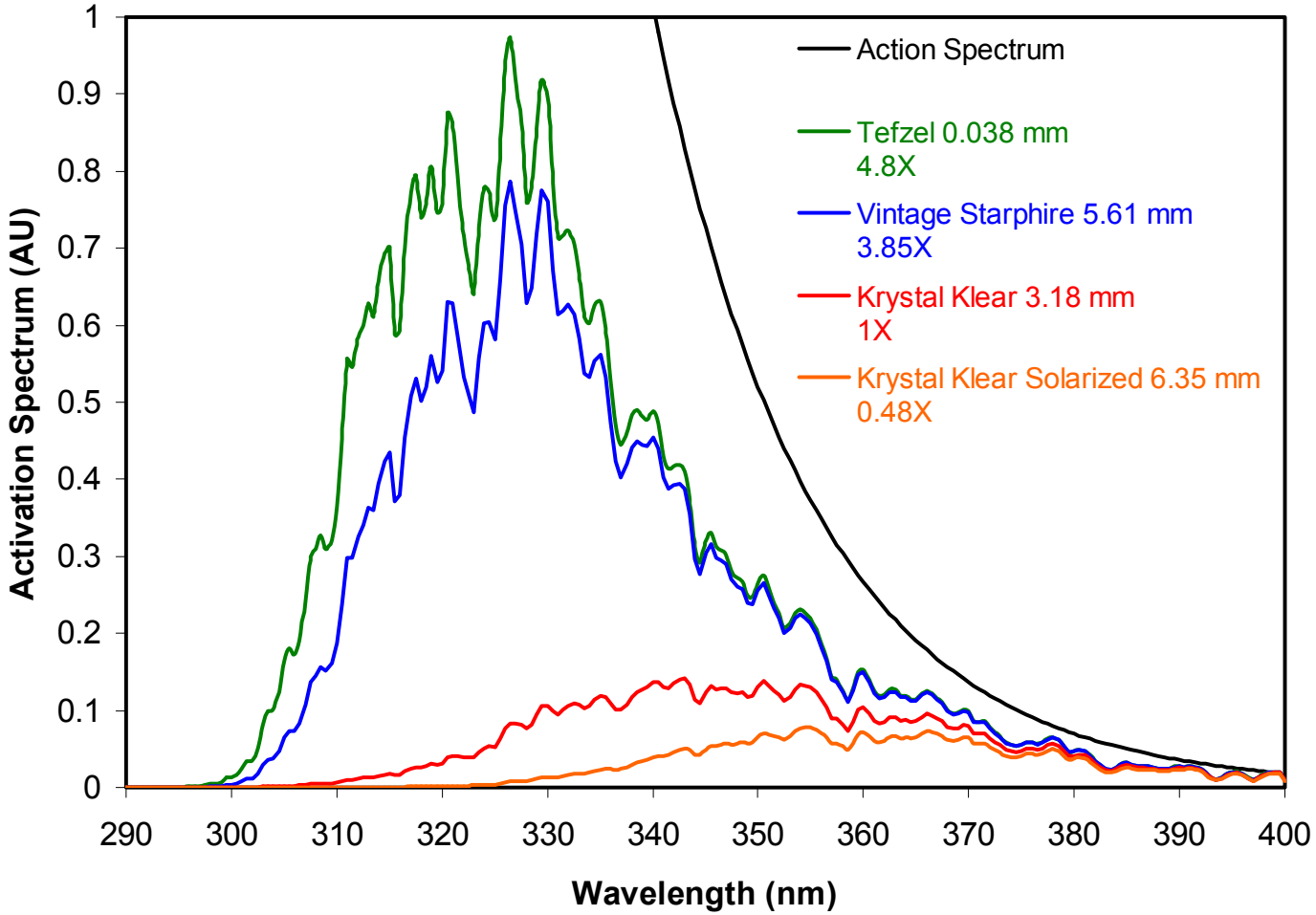

A. L. Andrady, Wavelength Sensitivity in Polymer Photodegradation, *Advances in Polymer Science* **128**, 49-94 (1997).

Other Arbitrary Action Spectra Give Similar Factors

Step Function

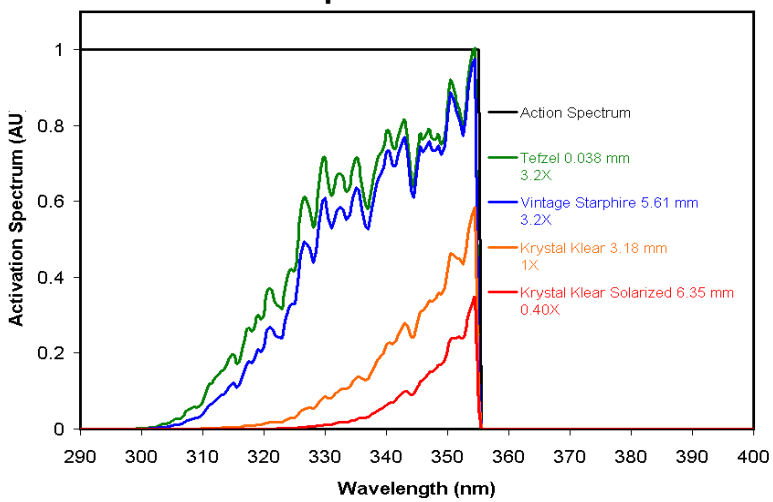

Linear Function

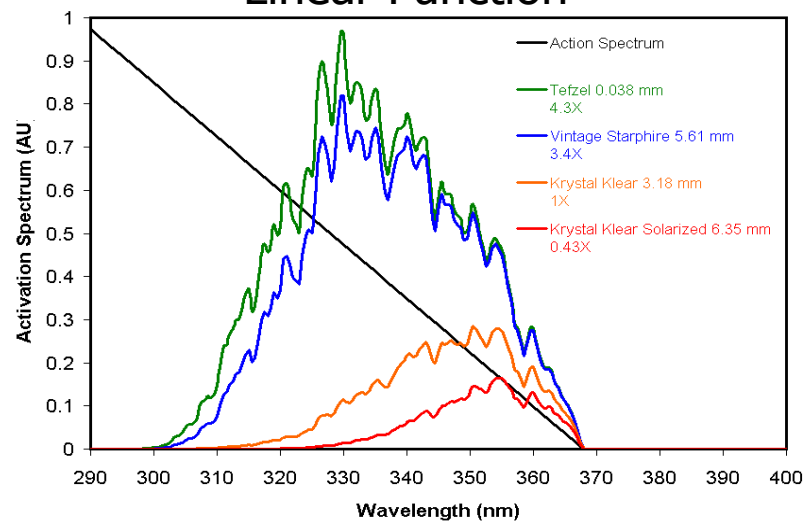

Action Spectrum		Exponential	Linear	Step
		B=0.07 (1/nm)	λ_o=368 (nm)	λ_o=354 (nm)
Tefzel	0.036 (mm)	4.83	4.30	3.63
Vintage Starphire	5.61 (mm)	**3.85**	**3.40**	3.19
Krystal Klear	3.18 (mm)	1	1	1
Krystal Klear	6.35 (mm)	0.48	0.43	0.40

At 2.5 UV suns, running 24 h/day (~4X), with 3.4 to 3.85X, it takes 6.2 to 7.0 months to get a 20 year equivalent dose.

Conclusions

- IEC PV Qualification tests do not adequately test UV stability.
- Using highly transmissive glass in test samples can increase the severity of stress testing giving exposure of the correct order of magnitude.
- Cost and light transmission must also be considered in selecting an encapsulant.
- The use of non-ceriated glass will increase the likelihood of glass/EVA delamination.

Acknowledgements

- This work was supported by the U.S. Department of Energy under Contract No. DE-AC36-99GO10337 with the National Renewable Energy Laboratory.