Techno-Economic Analysis of Hydrogen Production by Gasification of Biomass

Francis S. Lau, Robert Zabransky, and David A. Bowen
Gas Technology Institute (GTI)
1700 South Mount Prospect Road
Des Plaines, Illinois 60018

Charles M. Kinoshita and Scott Q. Turn
Hawaii Natural Energy Institute (HNEI)
2540 Dole Street, Holmes Hall 246
Honolulu, Hawaii 96822

Evan E. Hughes
Electric Power Research Institute (EPRI)
3412 Hillview Avenue
Palo Alto, California 94304-1395

Objective

The object of this project is to assess the cost of the production of hydrogen from three candidate biomass feedstocks and identify the barriers for commercialization of this technology. This is to be accomplished by first assessing the resource base. A process flow scheme will be developed for each feedstock that includes the following sections: feed preparation, followed by gasification or pyrolysis, a reforming section to reduce heavy hydrocarbons in the gas, a shift conversion process to maximize hydrogen production, and a gas purification process to provide gas meeting end-use specifications. The process design will then be used to perform an economic analysis to determine the cost of producing the hydrogen. Throughout this effort, possible barriers to implement the technology will be identified and a cost sensitivity analysis examining the major cost elements of the process will be performed. The resultant package will identify areas where targeted research will have the greatest benefits. The project will also identify the current influence of government incentive programs for biomass production and recommend changes that will further stimulate integration of biomass as an energy feedstock.

Introduction

The future application of hydrogen as a non-polluting fuel is dependent on the convergence of cost effective technologies for its manufacture, delivery, and end-use. DOE is actively pursuing research in all these areas to enable the private sector to demonstrate the technical viability of hydrogen technologies. Once viable from a technical viewpoint, commercial acceptance requires that these technologies demonstrate cost effectiveness in the marketplace. Key markets for hydrogen technologies are the transportation, stationary industrial, residential, and commercial energy markets. The prime mover targeted for this fuel is fuel cell systems that are capable of very efficient and clean conversion of hydrogen to electricity, either with or without byproduct heat recovery.

The Gas Technology Institute, GTI, has assembled an excellent team of researchers from world-renowned energy organizations to conduct this study. The team includes expert technology staff from GTI with first hand experience in the design and operation of biomass gasification and hydrogen production facilities. Staff from the Hawaiian National Energy Institute, HNEI, shall conduct resource evaluations for this project. Staff from EPRI will conduct economic analysis and policy review. GTI is currently seeking a partner to assess the barriers to commercialization and will perform those duties if a suitable partner cannot be found.

Biomass represents a large potential feedstock resource for environmentally clean processes that produce power or chemicals. It lends itself to both biological and thermal conversion processes and indeed both options are currently being explored. GTI, through its predecessor IGT, has been actively involved in the development of biomass conversion technologies for many years. These studies have been conducted on laboratory, process development, pilot plant, and demonstration plant scales using various reactor concepts. The feedstocks included both species grown specifically for use in producing energy-rich fuels, and byproduct materials such as bagasse and woodchips. The most recent program was the design and operation of a gasifier processing 100 tons/day of bagasse utilizing the RENUGAS® process. Through these programs, GTI has developed an extensive database and practical know-how on a wide range of biomass materials. This information is of value in the design and assessment of processes for the production of hydrogen from switch grass, bagasse, and nutshells. GTI's hands-on operating experience provides unique insight for identification of barriers to commercialization of biomass gasification systems. This insight is vital in identifying areas for targeted research to facilitate market entry of these technologies. GTI has also been an active participant in both basic research and development work on all types of fuel cells for over 40 years and currently has active programs in the PEM and solid oxide areas. GTI also has an active program in the gas turbine area.

At present the production of power or chemical feedstocks from biomass is economically attractive only in limited niche markets. However, as the price of fossil fuels rise and conversion technology viability is demonstrated, the use of biomass will expand. Furthermore, as efforts to reduce CO_2 in the atmosphere increase in response to climate change initiatives, the value of biomass feedstocks will be enhanced. Hydrogen production from biomass requires separation and purification processes. These processes provide an opportunity to remove a concentrated stream of CO_2 that can be channeled to a sequestration technology. If sequestration were employed, the relative greenhouse gas reduction would be even greater and it may be possible to have a negative carbon balance i.e., net carbon would be removed from the atmosphere.

A major attraction of hydrogen production from biomass is as a transportation fuel for power generation in a fuel cell. A recent Princeton University[1] study determined that an internal combustion engine powered vehicle fueled by hydrogen could reduce fuel cycle CO_2 emission by over 50% without sequestration.

Project Description and Implementation Plan:

An overall system approach will be used to design and assess the process designed to convert the candidate biomass feeds into high purity hydrogen. The system is comprised of three sections, feed collection and preparation, resource conversion, and end use. Within each section, decisions will have to be made as to how its objective can be met. Overlying this is the requirement that the sections must be integrated to meet the overall goal of the production of hydrogen. For example, for each particular feedstock the conversion section must produce a hydrogen stream for the end use that requires a specific feed gas composition while conforming to existing environmental standards. It may not be possible to achieve this for a selected feed. However, changing the end use may result in an attractive economic alternative. This project should identify this conclusion and in addition point out areas where further development work is warranted. After assessing the resource base, the starting point would be to set down the feed requirements for the conversion section. If they can be met then the design of the units within the section can commence, if not then another gasification process must be considered. Once an acceptable combination has been found then the issue of integrating it with the desired end use can be attacked. Throughout this iterative process the effect on the environment will have to be considered. After this work is completed, the economics of the process can be assessed. This will have to be done for each candidate feed. At the completion of this work, a sensitivity analysis will be made for each of the three cases. The choice of variables will be based on the results of each case. Two of the most likely are plant size and feed cost. GTI and the project team will utilize published reports, vendor representations and its own experience and database in selecting the components for each of the processing steps.

The technical analysis proposed here is anticipated to contribute to the mid-term and long-term use of hydrogen as an energy carrier, both in the U.S. and in other major sugar, nut, and biomass producing countries. The resource assessment and barrier identification will advance the knowledge base and direct future research focused on the goal of enabling the private sector to use hydrogen for industrial, residential, transportation, and utility applications. The primary elements of the study include:

- Resource analysis and preparation
- Process evaluation & flowsheet development
- Economic and sensitivity analysis
- Public programs and policy analysis
- Barriers to commercialization

The overall goal of the project is to develop a final report that documents the cost of hydrogen from each feedstock and recommends areas where further research can reduce these costs. This information will be used to identify the influence of government programs to stimulate biomass production for energy production and suggest changes that could promote hydrogen production from these fuels.

Resource Analysis and Preparation

As with any natural resource, the first question that must be answered is "What is the resource base?" To be economically utilized, sufficient quantities must be available in relatively high concentrations to minimize the cost of collection. The three candidate materials, switch grass, bagasse and nutshells all appear to meet this criterion.

Switch Grass: This grass is a fibrous, herbaceous species that can be harvested annually and thrives with little attention. Presently the state of Iowa has a substantial program directed at the growth and use of switch grass. If the land in Iowa that is currently in the Conservation Reserve Program could be converted to growing switch grass, the crop would have the potential of displacing three million tons of coal capable of generating electricity for 800,000 homes annually. In the U.S., the potential production of switch grass has been estimated[2] to be 1.7 billion tons in 2005 and could possibly rise to 2.0 billion tons by 2020. Thus the resource base is substantial and the possibility of using switch grass as a feedstock for a plant producing hydrogen is feasible.

Bagasse: Bagasse, like switch grass, is a fibrous material. It is a residue of sugar production and its use as a feedstock for gasification has been studied extensively. Currently it provides about 2 percent of Australia's total primary energy demand. Bagasse is also used extensively for power generation in India and has been used in the sugar producing regions of the U.S for many years. Bagasse consumed for power generation is burned in specially designed boilers. There is increased interest worldwide in converting bagasse into a clean gas that can be used for either power generation or conversion to chemical feedstocks. The conversion of bagasse to hydrogen would be an extension of this application. Worldwide production is estimated at 231 million tons/year, of which 25 million tons is generated in the U.S. Significant quantities are also available in developing countries throughout the world. The economic conversion of bagasse to hydrogen would assist these countries in improving their air quality while enhancing economic development.

Nutshells: Nutshells, residue from commercial nut processing, differ in quality as a fuel from bagasse and switch grass. Shells are non-fibrous and have a higher density than bagasse and switch grass. Thus, feedstock preparation must be different. Presently, the nutshells are primarily used as boiler fuel. Significant quantities of nutshells can be found throughout the world. In the U.S., the largest quantities of nuts are in the southern region and California. A recent paper[3] studied the production of hydrogen from hazel nutshells. The paper cited Turkey as being a major source with about 250 thousand tons of nutshells produced annually. As is the case with bagasse, conversion of this residue to an environmentally clean product is worthy of evaluation. A common feature of all biomass fuels is that they are a seasonal product. Large quantities are typically available across an entire region during a harvest season. As in the case of nutshells and bagasse, these are byproducts collected at centralized processing facilities. Transportation costs for the fuel are embedded in the primary product cost. However, for the byproduct to be used over the course of the year, it must be stored or processed.

Utilization requires consideration of balancing the scale of the conversion facility with the annual needs of the end-users. Switch grass on the other hand must be collected and hauled to a central energy facility to be used. Thus transportation costs become a focal point of the overall economics of the facility. Switch grass can be either stored at a central receiving location or at dispersed locations for collection near the time of use.

.

Feed System Analysis: To reliably feed biomass to the gasifier, it must be properly sized and dried to the gasifier specifications. Unlike coal, biomass has a wide range of feeding problems. Feeding methods that have been used with varying degrees of success include slurries, lockhoppers, screw and pneumatic transport systems. The proper choice is dependent on the physical characteristics, gasifier operating conditions, and type of gasifier. In some respects the design of the feed section can be the most critical step in the system design. Unlike solid materials such as coal the biomass materials are not free flowing and in some cases tend to clump due to the release of resin like materials during the sizing and drying operations. In this area a decision will have to be made as to whether to chop, shred or grind the feed. In general the more fibrous materials lend themselves to chopping or shredding and the more (granular) materials can be ground. Drying of the feed to a proper moisture level can be achieved either by direct or indirect heating in moving or fluidized bed operations. If significant amounts of high valued byproducts are evolved during the drying process an indirect process will facilitate recovery of them without adding complexity to the process and they can be subsequently converted to hydrogen. However if water is the main component evolved, direct contact with a hot combustion gas may be more economically preferable. Of the three candidate feedstocks, bagasse presents a unique problem in that a molasses like liquid may form as it passes through the feed system that results in clumping of the feed. This will require close attention in the system design.

Process Evaluation and Flowsheet Development

The initial step in development of a process flow sheet is to evaluate process alternatives to determine the most appropriate technology choices for each feedstock being evaluated. As discussed above, it is first necessary to prepare the fuel for feeding to the gasifier. The material is then gasified or undergoes pyrolysis, after which the gas is treated to remove particulates and other components that may be detrimental to the downstream processes. The cleaned gas is then sent to steam reformer and shift reactors where the hydrogen content is increased. The hydrogen rich gas exiting the shift section is then fed to a purification section where it is upgraded to meet the end use requirements.

The major steps required to convert biomass into hydrogen are shown in the block flow diagram in Figure 2. The production of high purity hydrogen from biomass is possible by using a combination of developing and commercially proven processes for these operations that will result in an economic and environmentally acceptable process for the conversion of biomass into high purity hydrogen. The form the process flow takes on will be dependent on the quantity of feed available at a particular location, the end use of the product, and the desired level of impact on the environment.

Gasifier Selection: A global approach will be used to select the combination of processing steps needed to convert the selected candidate materials into high purity hydrogen. The selection of a particular technology for each process will be based on analysis of published reports, discussions with equipment vendors and process licensors, and based upon GTI's extensive experience.

The choice of gasifier technology will depend on feedstock availability, the physical characteristics of the feed, and the temperature and pressure needed to optimize the desired product yields. Downdraft and updraft gasifiers are the simplest type of reactors. In the first of these the gas travels co-currently with the feed and partial combustion of the volatile matter occurs. The feed and gas travel counter-currently in the updraft gasifier and some of the char is burned. This seemingly minor difference can have a large effect on the product yield composition. In a fluidized bed process gas passes through a well-mixed bed of feed material

and partial combustion of both volatiles and char can be viewed as occurring throughout the bed. In an entrained flow gasifier the solid and gas flow through the reactor concurrently and like the fluidized bed both volatile matter and char are consumed. In all of the above reactors the heat required for gasification is supplied internally. A two-reactor gasification technique is also a possible choice. In these systems only combustion occurs in one of the reactors. The heat produced is then transferred to the other where gasification of the feed takes place. Another third concept is a two-step process. The biomass is first converted in a fast pyrolysis reactor to produce bio-oil which is transported to a central processing location where higher valued components are recovered and the residue is gasified to produce hydrogen or the oil may also be converted to hydrogen. GTI proposes to initiate the process design using its existing fluidized bed technology, and then compare the alternative processes to this base case design.

Gas Treatment Processes: The raw gas from the gasifier requires cleaning prior to any subsequent catalytic treatment process. This requires removal of particulates, sulfides, chlorides, ammonia and alkali metals. Filters can be used for particulate removal. The sulfides and ammonia can be removed with the use of a variety of commercial processes. They include both regenerable and non-regenerable solid adsorption and liquid absorption processes. The removal of alkali metals in some ways is unique to biogasification in that relatively high loadings are found in the gas. Potential methods include the condensation on cool surfaces, and adsorption on the filtered particulate matter. The selection of the process units in the cleanup section is dependent on the quality of the raw gas from the gasifier and the ultimate end-use of the product hydrogen.

Reforming & Shift Conversion: Steam reforming or selective partial oxidation is used to maximize hydrogen content of the gas. Steam reforming has the advantage of being a well-established process. Its disadvantage is it requires steam and a separate heating source to provide the heat of reaction. In contrast, selective partial oxidation is an emerging technology and the heat of reaction is generated in the reactor by combustion of some of the feed. Another possibility is to employ the technology being developed by Air Products and Praxair where membrane separation is combined with catalytic reforming in a single unit to produce synthesis gas. This breakthrough technology is in the early stages of development. Production of high purity hydrogen requires the reduction of carbon dioxide via the water gas shift reaction. This is usually done in two stages. A high temperature stage employing an Fe-Cr catalyst and a low temperature stage that uses a Cu-Zn catalyst. It may also be possible to utilize a single stage of shift but in general this has not proven to be economical for applications requiring the production of high purity hydrogen.

Gas Purification: The preparation of the product gas for end-use processes may require the removal of trace contaminants and if necessary the carbon monoxide level will be decreased. The carbon dioxide in the gas may be removed and sequestered by utilizing one of the commercial liquid absorption processes that employ either a chemical or physical solvent. The most likely process will employ a regenerated chemical solvent such as an amine or hot potassium carbonate. The choice will be dependent on the pressure level of the overall process scheme. If ultra pure hydrogen is required either pressure swing adsorption or cryogenic separation will probably have to be employed. Another possibility is to use membrane separation to purify the gas. If the gas is to be consumed in a process that is sensitive to carbon monoxide such as a PEM fuel cell, either methanation or selective catalytic partial oxidation will be needed. Methanation is the more mature process but it consumes more hydrogen than the partial oxidation based process. However at the carbon monoxide levels encountered at this point the overall net yield of hydrogen is not significantly different.

Economic and Sensitivity Analysis

After the design has been established cost data will be developed for each process section. Compiling this data with feedstock costs and other variable cost data, the cost of hydrogen can be calculated using an internal rate of return analysis methodology. Sensitivity analysis will be conducted based on the range of issues identified throughout the analysis procedure. The sensitivity of costs will be based on process modeling applied to optimize the selection process. Other factors to be considered include the potential for process improvement via emerging new technology and the participant's knowledge of relevant technical and economic factors that can influence decisions.

Federal agriculture policies play a key role in the economics of agribusiness. The participants will review current and proposed policies and evaluate their effect on the economics of biomass production and ultimate hydrogen product cost.

Barriers to Commercialization

The results of the study will identify the economic sensitivity of hydrogen production to each of the elements of the technology and to the various facets of production, harvesting, and processing as a fuel. The potential benefits of government programs to stimulate biomass production will be determined to further identify the impacts on hydrogen cost. This data will be analyzed to determine if the price of hydrogen can compete in the marketplace. Further analysis will determine what issues pose the most significant barriers to commercialization. Additional research that will reduce technical barriers will be identified, and modifications to government programs to stimulate biomass production will be suggested.

Project Status

Task 1: Resource Assessment of Biomass Feedstocks in the US and Abroad

Nuts

Major production countries for each of the individual nuts with possible concentrations of nutshells are shown on Table 1 for year 2001 production. For all of the nuts of interest here, production from the top three countries for each nut represents more than 50% of the world production for that nut.

INDIVIDUAL NUT AND COUNTRY	NUT PRODUCTION (Tonnes)	RATIO OF SHELL TO IN-SHELL NUT WEIGHT*	SHELL PRODUCTION (Tonnes)	CUMULATIVE % OF TOTAL
Almonds		0.45		
USA	385,550		173,498	29.07
Spain	257,000		115,650	48.45
Italy	105,000		47,250	56.37
Iran	87,000		39,150	62.93
Morocco	65,000		29,250	67.83
Tunisia	60,000		27,000	72.36
Syria	49,487	Balance = 37 countries	22,269	76.09
Brazil Nuts	Top 3	0.45		
Bolivia	36,000		16,200	52.36
Brazil	27,000		12,150	91.63
Côte d'Ivoire	5,200	Balance = 2 countries	2,340	99.19
Cashews		0.75		
India	500,000		375,000	34.00
Nigeria	184,000		138,000	46.52
Brazil	180,229		135,172	58.77
Tanzania	121,900		91,425	67.06
Indonesia	80,000		60,000	72.50
Guinea-Bissau	80,000	Balance = 21 countries	60,000	77.94
Hazelnuts	Top 4	0.5		
Turkey	630,000		315,000	71.97
Italy	120,000		60,000	85.68
USA	43,540		21,770	90.65
Spain	26,200	Balance = 17 countries	13,100	93.64
Tung Nuts	Top 4	0.5		
China	475,000		237,500	85.56
Paraguay	42,000		21,000	93.13
Argentina	33,000		16,500	99.07
Madagascar	2,500	Balance = 2 countries	1,250	99.52
Walnuts		0.47		
China	330,000		155,100	25.85
USA	254,010		119,385	45.75
Iran	138,000		64,860	56.57
Turkey	136,000		63,920	67.22
Ukraine	52,000		24,440	71.29
India	31,000		14,570	73.72
Romania	30,000	Balance = 36 countries	14,100	76.07

Table 1. FAO values for 2001 Nut and Shell Production by Nut and Country[4]

Several countries are identified as being major producers for more than one nut type. In particular, Turkey, China, and the United States of America are major producers for three nut types. For two of the nut types, both Iran and Italy are major producers. Table 2 lists countries in terms of declining production of nutshells for individual nuts. This table begins with the largest production of shells (375,000 tonnes for Turkey, from cashews) and includes production values down to just fewer than 20,000 tonnes. At this lower level of shell generation, a hydrogen production unit operating at 100 tonnes/day of feedstock could be kept fed for about 200 days/year. This is not intended to restrict consideration only to quantities higher than 20,000 tonnes/year of nutshells. It is possible that smaller resources of such feedstocks could be useful in a distributed system concept.

Countries with Highest Shell Production	Nut Production (Tonnes)	Ratio of Shell to In-Shell Nut Weight*	Shell Production (Tonnes)	Nut Type
India	500,000	0.75	375,000	Cashews
Turkey	630,000	0.50	315,000	Hazelnuts
China	475,000	0.50	237,500	Tung Nuts
USA	385,550	0.45	173,498	Almonds
China	330,000	0.47	155,100	Walnuts
Nigeria	184,000	0.75	138,000	Cashews
Brazil	180,229	0.75	135,172	Cashews
USA	254,010	0.47	119,385	Walnuts
China	615,000	0.19	116,850	Chestnuts
Spain	257,000	0.45	115,650	Almonds
Tanzania	121,900	0.75	91,425	Cashews
Iran	138,000	0.47	64,860	Walnuts
Turkey	136,000	0.47	63,920	Walnuts
Italy	120,000	0.50	60,000	Hazelnuts
Indonesia	80,000	0.75	60,000	Cashews
Guinea-Bissau	80,000	0.75	60,000	Cashews
Côte d'Ivoire	78,000	0.75	58,500	Cashews
Viet Nam	68,000	0.75	51,000	Cashews
Italy	105,000	0.45	47,250	Almonds
Mozambique	57,894	0.75	43,421	Cashews
Iran	87,000	0.45	39,150	Almonds
Morocco	65,000	0.45	29,250	Almonds
Tunisia	60,000	0.45	27,000	Almonds
Ukraine	52,000	0.47	24,440	Walnuts
Syria	49,487	0.45	22,269	Almonds
USA	43,540	0.50	21,770	Hazelnuts
Greece	47,000	0.45	21,150	Almonds
Paraguay	42,000	0.50	21,000	Tung Nuts
Turkey	45,000	0.45	20,250	Almonds
Benin	26,000	0.75	19,500	Cashews

Table 2. Countries with the Highest Shell Production, Individual Nuts, 2001 Values[4]

Sugar Cane

The top ten producing countries are responsible for more than three quarters of world production and the top three producers represent more than half of the world sugar cane production (Table 3). The overall trend of the top three sugar cane producing countries (Brazil, India, and China) is relatively flat, with not much increase likely for the future.

Country	Sugar Cane Production (Tonnes)	Cumulative % of Total
Brazil	339,136,000	27.03
India	286,000,000	49.82
China	79,700,000	56.17
Mexico	49,500,000	60.12
Thailand	49,070,000	64.03
Pakistan	43,606,300	67.50
Cuba	35,000,000	70.29
Colombia	33,400,000	72.95
United States of America	31,570,940	75.47
Balance = 103 countries		

Table 3. FAO Values for 2001 Sugar Cane Production by Country[4]

As for the category of nuts, the countries with the highest sugar cane production figures are also being tracked for identification of specific areas within these countries where cane is being

produced and/or processed. The United States is important for sugar cane production, but is only number 10 in the list of major producers. Obtaining definitive specific information for production in Brazil, India, and China may not be as easy as for the USA. Appropriate documents are being collected, however, and it appears that useful information is available.

Task 2: Hydrogen Production via Gasification/Pyrolysis of Biomass and Reforming

As a starting point, an initial estimate of the gasifier yields were made for a bagasse composition supplied by HNEI. This was done using a model developed by GTI in a previous biomass gasification program. The composition of the feed is presented in Table 4.

C	50.2
H	6.06
O	40.4
N	0.6
S	0.02
Cl	0.01
Ash	2.7

Table 4. Ultimate Analysis (dry basis) and Ash Content of Bagasse

At a gasifier temperature 1500°F and a pressure of 450 psi, the overall carbon conversion was 88.6 %. Further runs will be made to determine the effect of the process variables on the conversion. The processing scheme to be analyzed is shown in Figure 1.

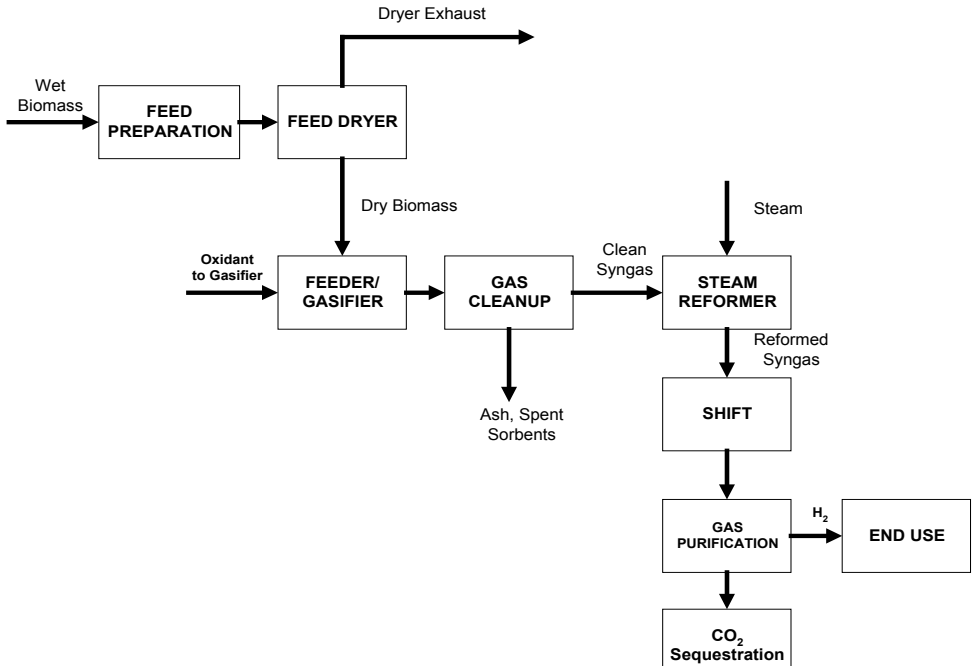

Figure 1. Biomass Gasification Process Flow

The need for a reforming step will be determined by the extent of hydrocarbons in the gasifier effluent, economics, and the end use hydrogen purity specifications. The design of the final gas cleanup will almost entirely be determined by the end use requirements.

A preliminary estimate of the gasification yields from hazel nutshells was made and then used in a Hysis (process engineering simulation software) simulation. The composition of the feedstock was obtained from a paper in the literature and is shown in Table 5.

C	46.76
H	5.76
O	45.83
N	0.22
S	0.67
Cl	0.00
Ash	0.77

Table 5. Ultimate Analysis (dry basis) and Ash Content of Hazel Nutshells

The process simulation includes logic decision points, which direct the flow path based on the composition of the gas. The bases for the decisions are generally accepted levels for the components in the gas. One example is the choice of sending the gasifier product gas to reforming, prior to the shift reactor, or sending it directly to the shift reactor. If the methane content of the gas is too high for a particular application, the gas will have to be reformed prior to shifting. Other examples are the choices for the units that will have to be incorporated in the gas cleanup section; the need for adding water prior to shift and the selection of the CO_2 removal process.

The process simulation program has essentially been completed. Simulation runs can be made once the feedstock compositions and target levels for contaminants have been set. The process model flow is shown in Figure 3 based on the model described in Figure 2 above.

The results of a simulation for the hazelnut feed is shown in Table 6 for a gasifier producing 100 moles per hour of product gas. These results show that:

1. A reformer was needed. This was required because the gasifier effluent, methane, was in excess of 3%, which was chosen as the maximum level of methane in the gasifier gas stream that would be acceptable before a reforming step would be required. This switching point can be set at any methane level.
2. Water was added to the shift feed. This was necessary to get the CO level in the shift product gas to 3000 ppmv in a single stage operating at a temperature of 500°F.
3. The methane content of the finished gas is higher than that of the CSG. This occurred because methanation was chosen as the method to reduce the CO level to 10 ppmv.

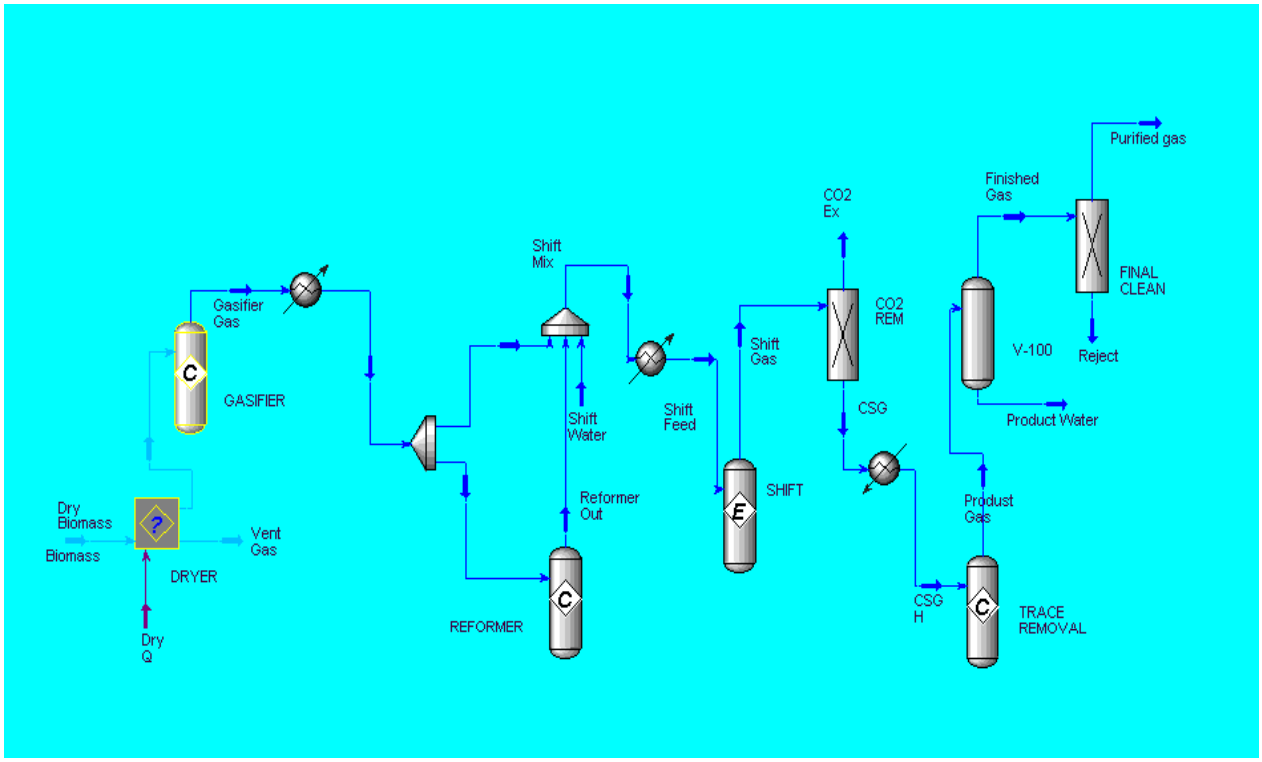

Figure 3. Hysis Simulation Process Flowsheet

Name	Gasifier Gas	Reformer Out	Shift Feed	Shift Gas	CSG	Finished Gas	Purified Gas
Temperature (F)	1500	1500	500	500	204.7	100	100.3
Pressure (psia)	45	45	45	45	25	25	25
Molar Flow (lbmole/hr)	100	125.9	230.9	230.9	176.1	87.22	86.2
Mass Flow (lb/hr)	2387	2387	4279	4279	1868	291.8	253.9
Comp Mole Frac (BIOMASS*)	0	0	0	0	0	0	0
Comp Mole Frac (Hydrogen)	0.1891	0.514	0.2803	0.3621	0.4748	0.9348	0.9458
Comp Mole Frac (CO)	0.196	0.1557	0.0849	0.003	0.004	0.0001	0.0001
Comp Mole Frac (CO2)	0.2489	0.2894	0.1578	0.2396	0.0031	0.0063	0
Comp Mole Frac (H2O)	0.2484	0.0307	0.4715	0.3897	0.5109	0.0378	0.0382
Comp Mole Frac (Methane)	0.0662	0	0	0	0	0.0079	0.008
Comp Mole Frac (Ethane)	0.0386	0	0	0	0	0	0
Comp Mole Frac (Nitrogen)	0.0067	0.0054	0.0029	0.0029	0.0038	0.0077	0.0078
Comp Mole Frac (Ammonia)	0.0027	0.0022	0.0012	0.0012	0.0015	0.0016	0
Comp Mole Frac (H2S)	0.0033	0.0026	0.0014	0.0014	0.0019	0.0038	0

Table 6. Major Stream Conditions and Compositions for the Conversion of Hazelnut Shells to Hydrogen

References

1. Ogden J. M., Prospects for Building a Hydrogen Energy Infrastructure, PU/CEES Report No. 318, July 1999.
2. Graham R.L., et.al. The Economics of Biomass Production in the United States, ORNL, 1995.
3. Midilli, A., et. al. Int. J. of Hydrogen Energy 26 (2001) 29-37.
4. http://www.fao.org/waicent/faoinfo/Economic/faodef/FDEF05E.HTM Woodruff, J.G. 1979. Tree Nuts: Production, Processing, Products. AVI Publishing, Westport, CN.