DEFECT-FREE THIN FILM MEMBRANES FOR H_2 SEPARATION AND ISOLATION

T. M. Nenoff, F. Bonhomme
Sandia National Laboratories
PO Box 5800, MS 0755
Albuquerque, NM 87185-0755
tmnenof@sandia.gov

Abstract

We have synthesized defect-free aluminosilicate and silicalite zeolite thin films supported on commercially available alpha and gamma alumina disk substrates. We have also built a permeation unit that can test both pure and mixed gases from room temperature to 250°C. Results indicate fluxes on the order of 10^{-6} to 10^{-7} mole/(m^2Pa sec) and excellent separation values for H_2 or CO_2. For the Al/Si membrane: $H_2/N_2 \geq 61$, $H_2/CO_2 \geq 80$, $H_2/CH_4 = 7$, $CH_4/CO_2 \geq 11$; for the TPA/Si membrane: $H_2/N_2 \geq 61$, $H_2/CO_2 \geq 80$, $H_2/CH_4 = 7$, $CH_4/CO_2 \geq 11$. Our data show that we can use the adsorption ability plus the effective pore diameter of the zeolite to "tune" the selectivity of the membrane. Another avenue of research is into bulk novel molecular sieve materials, with the goal of "tuning" pore sizes to molecular sieving needs. A novel crystalline 12-ring microporous gallophosphate material is described.

Introduction

Our long-term goal is to synthesize defect-free thin film membranes with crystalline inorganic molecular sieves (zeolites) for use in hydrogen production technologies. Current hydrogen separation membranes use Pd alloys or chemically and mechanically unstable organic polymer membranes. The use of molecular sieves brings a stable inorganic matrix to the membrane. The crystalline frameworks have "tunable" pores that are capable of size exclusion separations [1,2]. The frameworks are made of inorganic oxides and result in materials with thermal stability over 600°C. The pore sizes and shapes are defined crystallographically (<1Å deviation) which allows for size exclusion of very similarly sized molecules.

Synthesis and Characterization

Thin Film membranes:
Zeolitic thin film membranes were synthesized by a two step method: (1) seeding of the substrate, and (2) hydrothermal synthesis of the zeolitic film. This year we studied the effects of changing framework acidity and effective pore diameter. The use of an organic tetramethylamine template (TMA^+) allowed for a very low Si:Al ratio (effectively no Al present in the zeolites). The calcination of the synthesized membranes allowed for the removal of the TMA^+ and replacement with a small, non-blocking, charge balancing proton.

Synthesis: Seeds of a zeolite are hydrothermally synthesized at 95°C for 40 hours resulting in a colloidal suspension. The seeds are isolated by repeated centrifugation, washed in H_2O and dried in air at 50°C. The average crystallite size is approximately 0.2 microns. The seeds are joined to the substrate (commercially available alpha or gamma alumina disk or tube; also newly available oxide coated porous stainless steel disks) and then reheated, above 500°C. For the hydrothermal synthesis, a normal zeolite precursor gel is synthesized. This gel is homogenous

and has no precipitate. The seeded substrate is submersed in the gel solution and heated from 150-200°C for a few days. The membrane is then rinsed with H_2O and dried at 100°C.

Characterization techniques: The X-ray powder diffraction patterns of the zeolite crystalline phases were measured on a Siemens D500 diffractometer with a Ni-filtered CuKα radiation. The data were collected over the angular range 5-100 ° 2θ with a step size of 0.04 ° and a counting time of 5 seconds per step. The sample was rotated at 30 rpm during the measurement. Scanning Electron Microscopy (SEM) data is collected on a JEOL JSM-T300 SEM with energy dispersive capabilities (Note, the SEM was not operating for most of the winter 2001-2002; a new replacement unit is being installed).

Permeation Unit (see Figures 1 and 2): A compact membrane test unit has been designed and built to collect permeation and separation selectivity data on various prepared and synthesized materials. The unit readily fits into a 1.6 cu.ft. convection oven. The unit is assembled from commercially available Swagelok® and Cajon® Ultra-Torr tube fittings. The unit can be operated at temperatures up to 200°C and pressures to 150 psig. A Hewlett Packard gas chromatograph, with a combination flame-ionization detector (FID) / unit resolution quadrupole mass spectrometer, and a QMS200 Residual Gas Analyzer provide analytical capabilities for the unit.

A list of associated equipment and materials used to conduct permeation studies follows:

- 1.6 cu.ft. oven with programmable temperature control from 30 to 200°C
- QMS200 Residual Gas Analyzer (RGA)
- Toxiplus CO monitor
- Brooks mass flow controllers and power supply readout
- Tylan back pressure regulator
- HP5890 Series II gas chromatograph with FID and wide bore-capillary columns
- Hewlett Packard 5791 Mass Selective Detector with jet separator
- Hewlett Packard Digital Flow Gas Meter
- He, N_2, O_2, CO_2, CO, SF_6, and various pure and mixed hydrocarbon/inert gas blends
- Dual-Stage gas regulators for gases/gas manifold for flow, addition/mixing of gases.

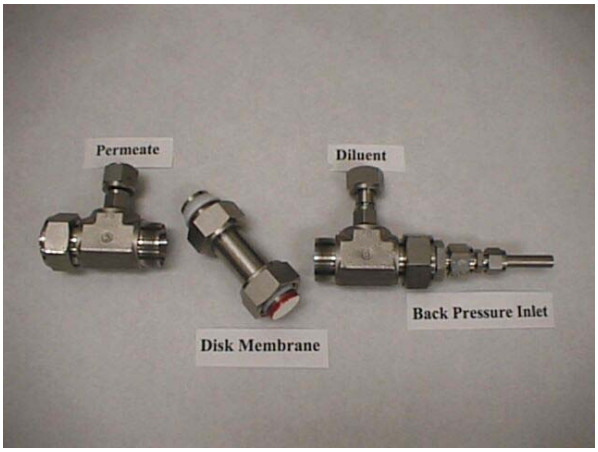

Figure 1: Alumina substrate covered with zeolite film. Swagelok® fitted for the permeation unit.

(a)

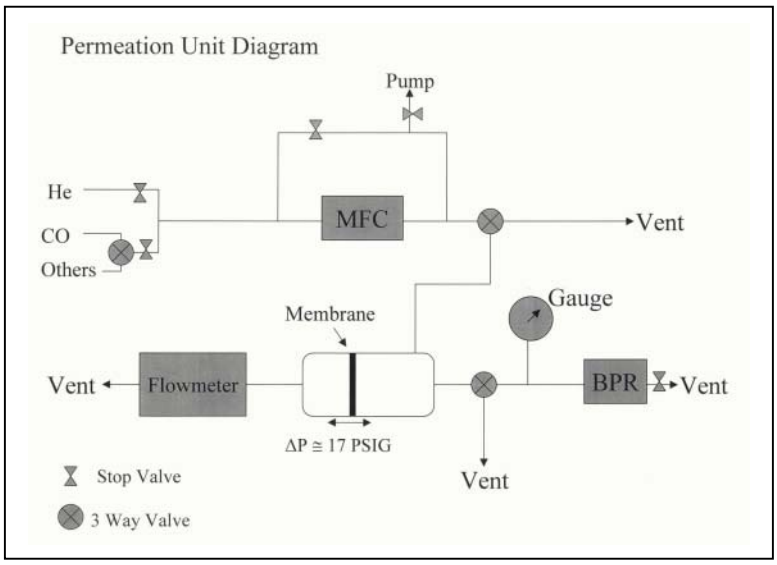

(b)

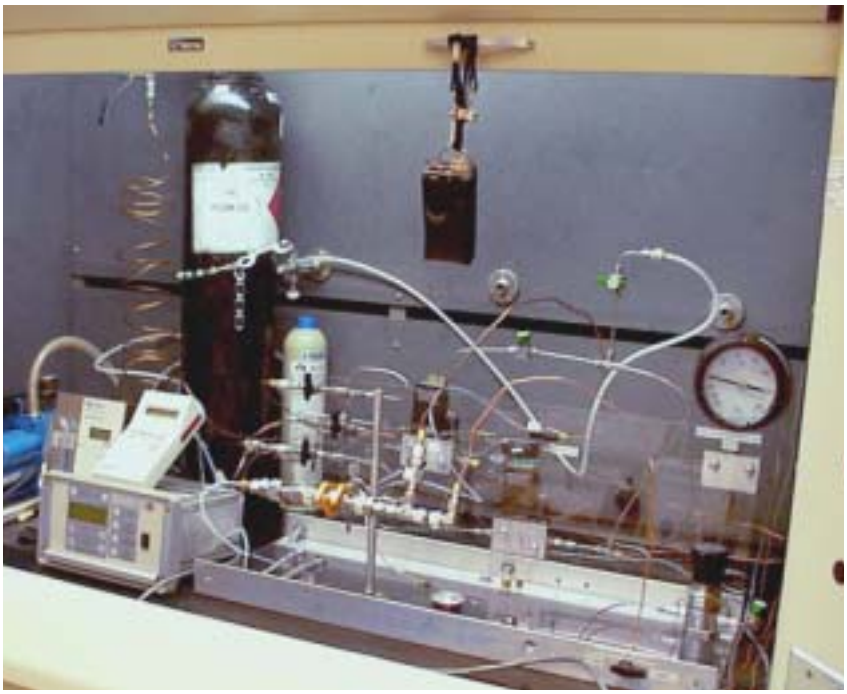

Figure 2: Amended permeation unit for light gases (including CO), pure and mixed. (a) the equipment diagram; (b) the actual unit located inside a fume hood.

Novel Bulk Microporous Phases:
Two new ammonium templated gallophosphates have been synthesized solvothermally using mixtures of ethylene glycol and water as solvent. The structure of both phases was determined from X-ray powder diffraction data. $[Ga(PO_4)(OH)]^- \cdot [NH_4]^+$ (2D-GAPON) crystallizes in monoclinic symmetry, space-group $P\,2_1/m$ with cell parameters a = 8.564(1) Å, b = 6.0387(8) Å, c = 4.4883(6) Å, β = 98.05(1)° and V = 229.84(3) Å^3. Its two-dimensional structure consists of

infinite anionic layers separated by ammonium cations. $[Ga_2(PO_4)_3]^{3-} \cdot 3\ [NH_4]^+$ (3D-GAPON) has monoclinic symmetry, space-group *C2/c*, with unit cell dimensions *a* = 13.462(2) Å, *b* = 10.301(1) Å, *c* = 8.992(1) Å, β = 111.28(1)° and V = 1161.9(6) $Å^3$. Its three-dimensional structure contains constricted elliptical channels running along the *c* axis, which host the ammonium ions.

Results

Thin Film membranes: In the area of thin film membranes we have successfully utilized the two step method (seeding and hydrothermal) to synthesize micron thick aluminosilicate zeolite membranes on alumina disks. The seeding method tends to give more consistent results (percent coverage, uniform crystallite size) than multiple hydrothermal syntheses on unseeded substrates. In particular, we have had a great deal of success with the organically templated ZSM-5 frameworks. The only consistent problem has been that our membranes have grown on both sides of the disk support, even when seeding occurs on one side. As a result, our flux through the membrane/support is slightly diminished from what it would be with only one-sided membranes.

This year, we have studied the effects of framework acidity and effective pore diameter on selectivity of gas permeation. We have been able to change (decrease) the acidity by templating an all Silica ZSM-5 zeolite crystalline membrane with the organic molecule tetrapropylamine (TPA^+). Once crystallized and then calcined, the TPA^+ is replaced by the much smaller charge balancing H^+. The result is a crystallographically identical framework with all aluminum atoms replaced by silicon atoms. The effective pore diameters are actually larger than the Na/Al/Si ZSM-5 zeolite membranes because the charge balancing sodium cation is larger than the silicalite proton. These changes affect the selectivity of the membranes: the silicalite membrane has enhanced selectivity of CO_2, and is not dependent on molecular sieving but rather surface adsorption (Table 1).

Table 1: Permeation values at Room Temperature

SNL TPA/Si (ZSM-5,2-sided) ≈ 10^{-6} – 10^{-7} mole/(m^2 Pa sec)

H_2/N_2 = 1.4	
H_2/CH_4 = 0.625	CO_2/N_2 = 4.2
He/N_2 = 1.1	CO_2/O_2 = 4.9
CH_4/N_2 = 2.28	CO_2/H_2 = 3.0
$H_2/CO_2 \geq 0.34$	CO_2/CO = 4.2
H_2/O_2 = 1.7	CO_2/CH_4 = 1.8
CH_4/CO_2 = 0.54	
H_2/CO = 1.43	

SNL Na/Al/Si (ZSM-5,2-sided) ≈ 10^{-6}mole/(m^2 Pa sec)	**Knudsen Selectivity**	**Lit. (values for Al/Si)** [4,5] **≈ 10^{-7}-10^{-10} mole/(m^2Pa•s)**
$H_2/N_2 \geq 61$	H_2/N_2 = 3.73	H_2/N_2 = 3.91
H_2/CH_4 = 7	N_2/CO_2 = 1.00	N_2/CO_2 = 0.625
$He/N_2 \geq 7$	He/N_2 = 2.64	H_2/N_2 = 100; 150°C
$CH_4/N_2 \geq 1.4$	CH_4/N_2 = 1.32	10^{-10} perm.
$H_2/CO_2 \geq 80$		
$H_2/O_2 \geq 11$		
$CH_4/CO_2 \geq 11$		

Our permeation testing of the material shows that these membranes are defect-free. Defect free is denoted by permeation selectivity due to size exclusion by molecular sieving through the zeolite pores, and not through crystalline defect sites, pin holes, or crystallite mismatches (pores of ZSM-5 are 5.5 Å). Molecules used for this test are He (kinetic diameter = 2.6 Å) and SF_6 (kinetic diameter = 5.5 Å). Pure gas studies are run at room temperature.

Once the membrane is determined to be defect-free, testing on gases vital to the steam reforming cycle for natural gas to hydrogen fuels can begin. Table 1 (above) shows the results with our membranes, compared with literature values [4,5]. Most importantly, the Sandia (SNL) TPA/Si ZSM-5 membranes have a high selectivity for CO_2 versus the other light gases tested and the SNL 2-sided ZSM-5 membranes (Figure 3) have superior flux values than observed elsewhere. In particular, the TPA/Si membranes have separation value ratios of $CO_2/N_2 \geq 4.2$, $CO_2/O_2 \geq 4.9$, $CO_2/CH_4 = 1.8$, $CO_2/H_2 = 3.0$, $CO_2/CO = 4.2$ [6]. This is even more valuable as it is with crystalline inorganic zeolite membranes that are chemically, thermally and mechanically robust and stable.

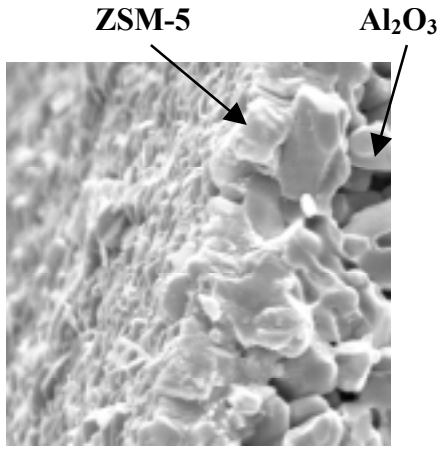

Figure 3: Cross section view by SEM of the micron thick Na/Al/Si ZSM-5 membrane on gamma-alumina substrate.

In comparison to Pd alloy films, the Na/Al/Si ZSM-5 zeolite membranes perform well. According to the literature [7], Pd on alumina had relative ratios of light gas separations of $H_2/N_2 = 110$ at elevated temperature of 350°C. The flux was also low (2×10^{-7} mole/m^{2}Pa sec). In comparison to ceramic porous films, the TPA/Si zeolite membranes also perform well. According to the literature [8], the alumina films have similar fluxes to those exhibited through our zeolite membranes at room temperature. These films also show similar preference for CO_2 selectivity based upon surface enhanced diffusion.

We will be focusing on the supports for these membranes in this coming year. Ceramic supports have proven valuable in the development of zeolite membranes. However, they are difficult to incorporate into scale-up and commercialization. Therefore, we are attempting to use stainless steel supports that can be easily fitted into industrial operations. However it is very difficult to grow continuous defect-free zeolite films on stainless steel; if achieved, there is the added problem of thermal mismatch cycles between stainless steel and metal oxide phases. We have turned to industry to provide us with oxide coated stainless steel supports (SS316).

Early experiment data from our lab shows that ZSM-5 crystalline films are able to grow on these supports.

Novel Bulk Microporous Phase:
$[Ga_2(PO_4)_3]^{3-} \cdot 3\ [NH_4]^+$ (3D-GAPON [3], Figure 4) has a three dimensional structure built up by the linkage between PO_4 tetrahedra and GaO_5 trigonal bipyramids. Five of the six independent oxygen atoms are bonded to one gallium and one phosphorus atom; O6 forms a terminal bond with P2. The structure thus contains 12-membered channels parallel to the *c* axis where the ammonium groups reside. The ammonium groups compensate the charge of the anionic framework and the neutrality does not require the presence OH^- groups. Those seemingly spacious pores are however very restricted by the P2-O6 terminal bonds that point inwards. The oxygen atom O6, which has a Bond Valence Sum (BVS) of only 1.32, is strongly hydrogen-bonded to both ammonium groups, with two short distances O6-N1 = 2.70(1) Å and O6-N2 = 2.72(1) Å. The other oxygen atoms have a BVS between 1.8 and 2.1, thereby confirming the absence of hydroxyl groups in the structure. The (unconstrained) Ga-O-P angles are narrowly distributed, being comprised between 134.2° and 139.4°.

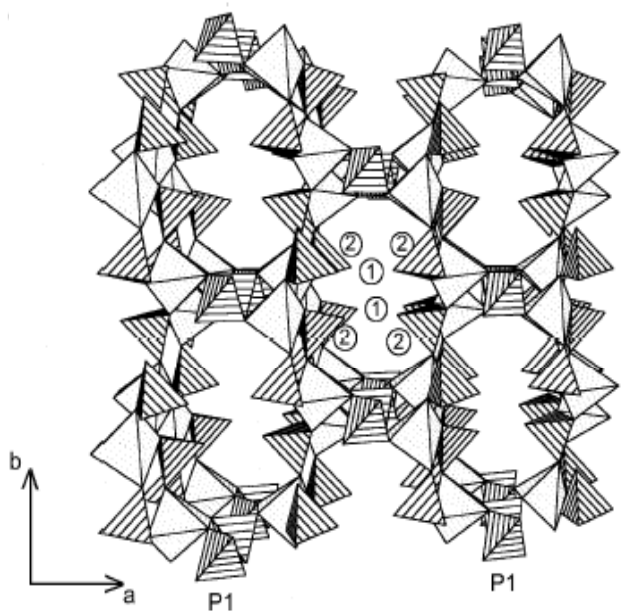

Figure 4: Polyhedral representation of 3D-GAPON viewed approximately along the *c* axis. Lined polyhedra: PO_4 tetrahedra, dotted polyhedra: GaO_5 trigonal bipyramids. Numbered spheres: nitrogen atoms.

Discussion

Zeolites are inorganic crystalline microporous molecular sieves. They contain an inherent chemical, thermal and mechanical stability not found in conventional membrane materials. Our goal is to utilize those zeolitic qualities in membranes for the separation of light gases. We have successfully demonstrated (through synthesis, characterization and permeation testing) both the ability to synthesize defect-free zeolitic membranes and use them as size selective gas

separation membranes. We have been successful in the synthesis of these phases on commercially available disks. However, this is in addition to successes we have had in synthesizing zeolitic membranes to tubular supports [9]. We hope to expand our knowledge base and the science to growing single sided defect-free zeolite membranes on disks as well as the commercially important stainless steel supports. Furthermore, we are expanding our studies into the use of oxide-coated stainless steel supports provided by industrial partners Pall Corporation and Trumem International. Another avenue of interest in the synthesis and development of thin film membranes for separations is in our un-supported catalytic zeolite membranes [10]. We have successfully synthesized ZSM-22 membranes and hope to leverage this technology toward the possible fuel cell applications. By starting with bulk phases, we have synthesized a number of new microporous phases, including our new 12-ringed 3D-GaPON $[Ga_2(PO_4)_3]^{3-} \cdot 3\ [NH_4]^+$. Work continues in the synthesis of these novel materials as thin film membranes.

Acknowledgements

We thank the US DOE Hydrogen Program for support of our research, under contract DE-AC04-94AL85000. Sandia is a multi-program laboratory operated by Sandia Corporation, a Lockheed Martin Company, for the United States Department of Energy.

References

1. Chiang, A.S.T.; Chao, K. "Membranes and films of zeolite and zeolite-like materials", *J. Phys. Chem. and Solids*, **2001**, *62*, 1899; and references within.

2. Caro, J.; Noack, M.; Kolsch, P.; Schafer, R. "Zeolite membranes – state of their development and perspective", *Microporous and Mesoporous Materials*, **2000**, *38*, 3; and references within.

3. Bonhomme, F.; Thoma, S. T.; Nenoff, T. M. "Two ammonium templated gallophosphates: Synthesis and structure determination from powder diffraction data of 2D and 3D-GAPON". *Microporous & Mesoporous Materials*, **2002**, *53*, 87.

4. Tavolaro, A.; Julbe, A.; Guizard, C.; Basile, A.; Cot, L.; Drioli, E. "Synthesis and characterization of a mordenite membrane on an α-Al_2O_3 tubular support." *J. Mater. Chem.* **2000**, *10*, 1131.

5. Lai, R.; Gavalas, G. R. "ZSM-5 membrane synthesis with organic-free mixtures" *Microporous and Mesoporous Materials*, **2000**, *38*, 239.

6. Bonhomme, F.; Nenoff, T. M. "Defect-free zeolite membranes for CO_2 separations" *Microporous and Mesoporous Materials*, **2002,** in preparation.

7. Chou, K. S.; Wang, S. M. "Studies on the preparation of Pd/alumina/porous stainless steel membranes for hydrogen separation" *J. Chinese Inst. Chem. Eng.*, **2000**, *31*, 499.

8. Fain, D. E.; Marshall, B. B.; Raj, T.; Adcock, K. D.; Powell, L. E. "Ceramic Membranes for High Temperature Hydrogen Separation", 16th Conference on Fossil Energy Materials, Baltimore, MD, 4/22/02-4/24/02.

9. Thoma, S. G.; Nenoff, T. M. "A New Method for Synthesizing Defect-Free Thin Film Membranes: Composite Zeolite/Sol-gel Membranes" SD-6222, US Patent Submission, 2000.

10. Thoma, S. G.; Trudell, D. E.; Bonhomme, F.; Nenoff, T. M. "Vapor Phase Transport Synthesis of un-supported ZSM-22 Catalytic Membranes" *Microporous and Mesoporous Materials*, **2001**, *50*(1), 33.