TRNSYS Modeling of 1 MW_e Saguaro Plant

Greg Kolb
Sandia National Laboratories
Vahab Hassani
NREL

Why TRNSYS models of Saguaro?

- SunLab will help APS assess the performance of Saguaro
- Should Saguaro pursue storage?
- Existing trough models (EXCELERGY, LUZERGY) are inadequate
  - Do not model constant flow mode (Saguaro)
  - Do not model thermocline interactions with rest of plant
- Existing thermocline models (Pacheco, NEXANT) are inadequate
  - Do not include thermal losses or axial conduction
  - EXCEL based models run slowly and make annual simulations impractical
- Initial TRNSYS models of Saguaro and future Saguaro are now available
  - Constant flow, no storage (Saguaro)
  - Constant temperature, with storage (future Saguaro)
  - An annual simulation only takes 1 or 2 minutes

Saguaro
(constant flow, no storage)

New Type 297 (const flow) created from STEC Type 197 (const T)

Temp/flow is coupled between solar and ORC

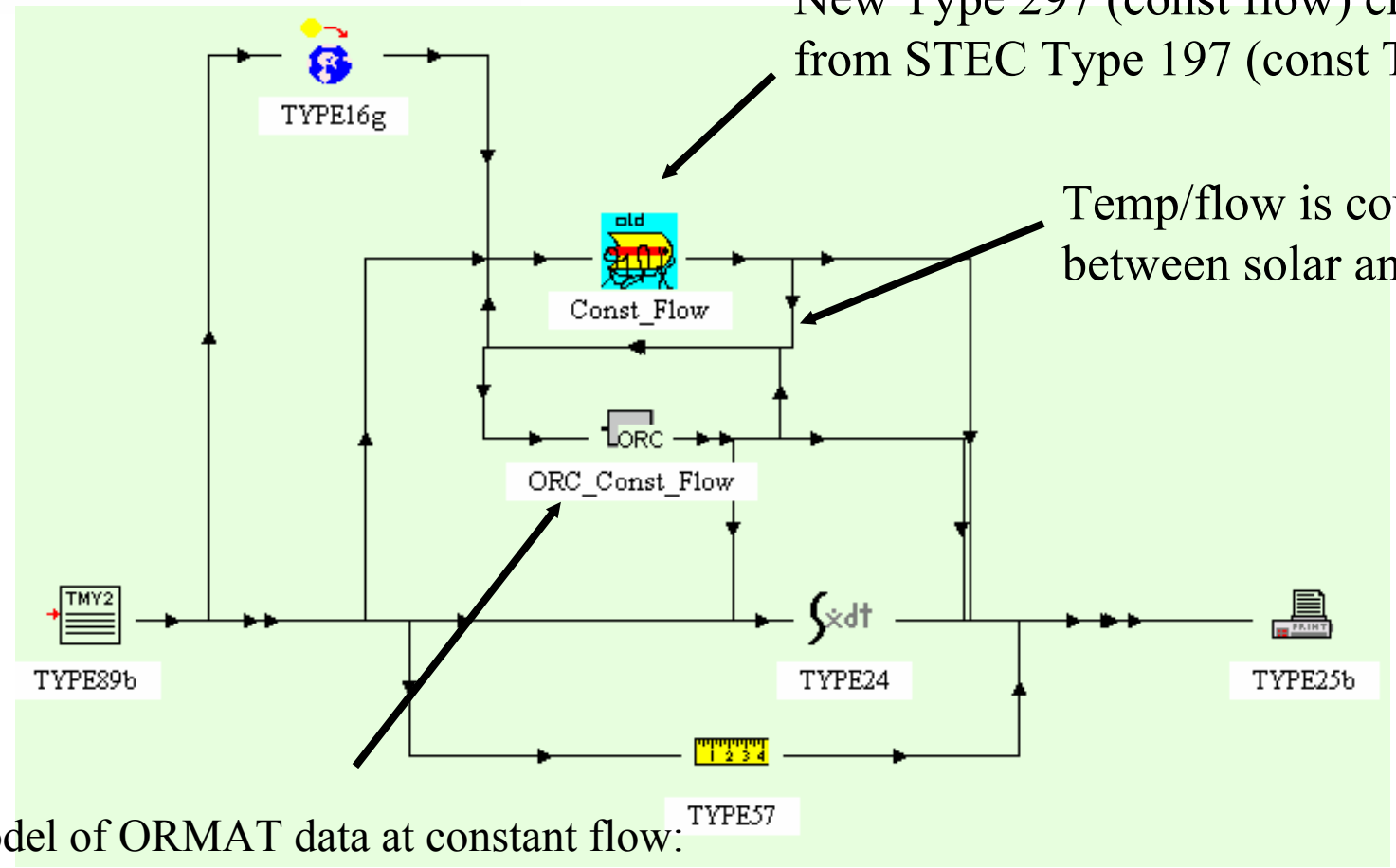

Curve fit model of ORMAT data at constant flow:
Output kWe = f(In_temp), Out_Temp = f(In_temp).
Also, delay ORC startup after achieving startup condition.

Initial Saguaro TRNSYS Simulation Insights

- TRNSYS predicts ~2300 MWh (gross) annual production
- Given 10346 m^2, 100% plant availability
  - Similar to SolarGenix prediction
- Annual output can be improved through seasonal changes in HTF flowrate
  - Base case 42300 kg/hr all year
    - Low HTF temps in winter delays startup of ORC (need ~190° C) and reduces turbine kW output after startup
  - It appears at least 2 separate flowrates are called for
    - Operate Nov - Feb at reduced flowrate
    - Rest of the year at full flowrate
  - Optimization will require further study

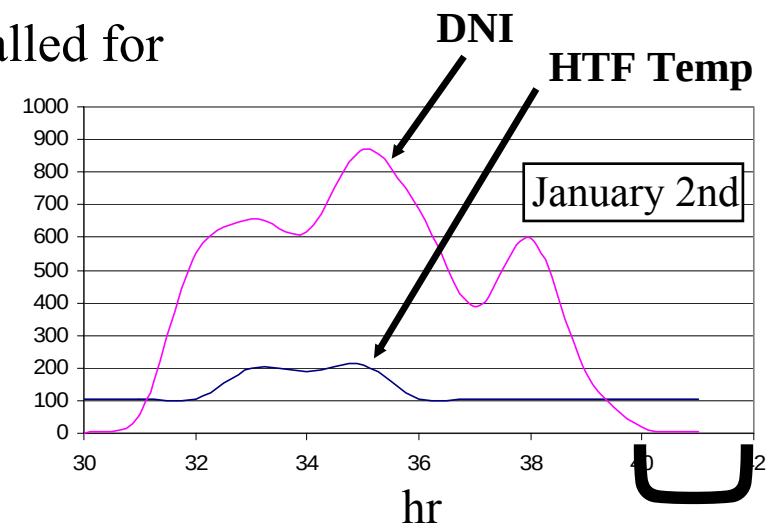

Future Saguaro
(constant temperature, with storage)

Derived from ASPEN model (NREL):
Out_kWe = f(In_temp, flow),
Out_Temp = f(In_temp, flow).

STEC storage control algorithm determines storage/ORC flow split and mixed return temperature to solar field

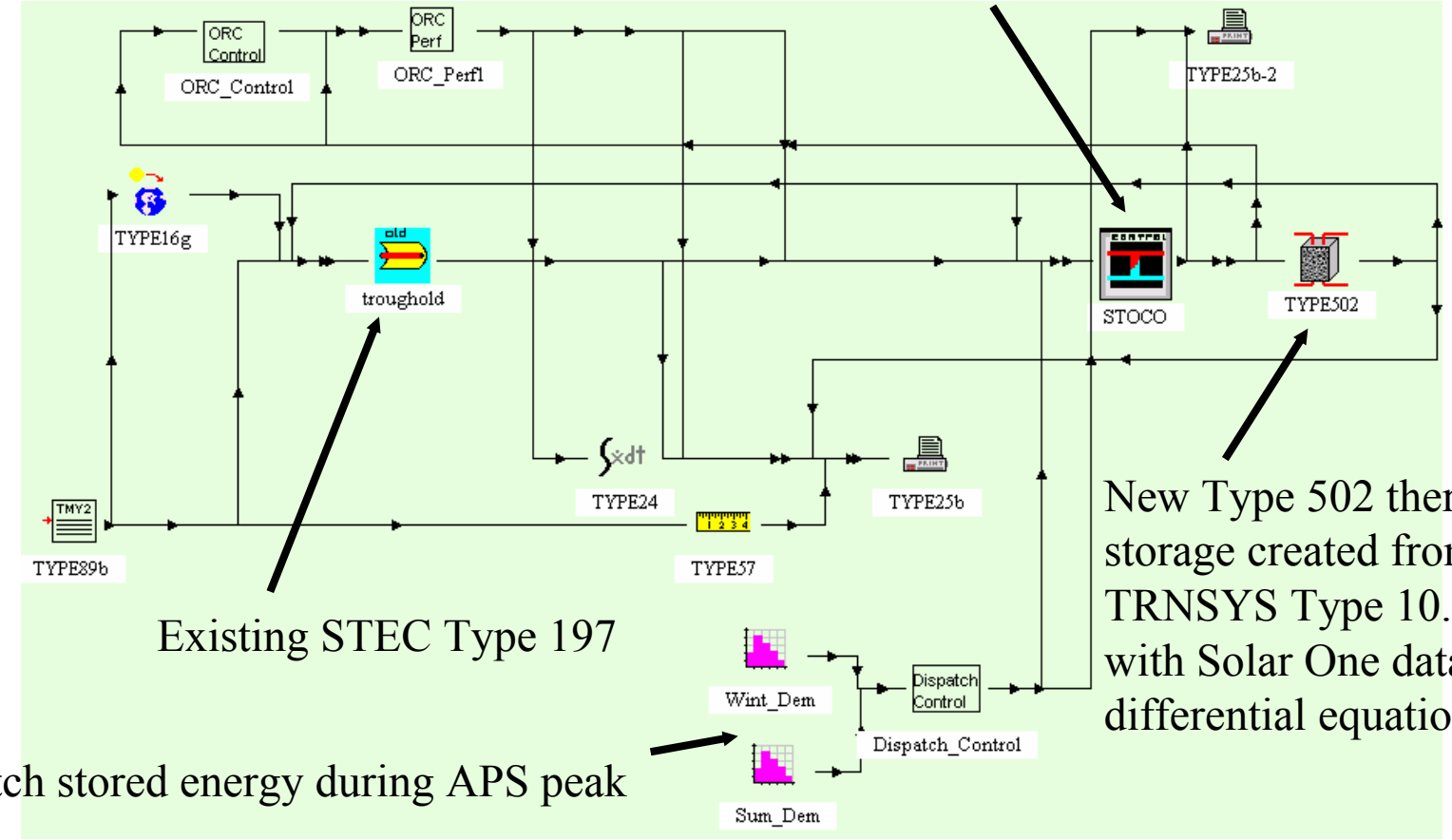

Existing STEC Type 197

New Type 502 thermocline storage created from TRNSYS Type 10. Validated with Solar One data. Uses 23 differential equations.

Dispatch stored energy during APS peak

Thermocline Storage Background

- Studies indicate that a thermocline-type energy storage should be the most cost effective option for parabolic trough power plants
- Thermocline was demoed at Coolidge ORC plant, 1979 to 82
  - Stratified oil with no rock
  - 200 m^3, H/D ratio = 3.5
  - 68 % charge/discharge daily thermal η
- Thermocline was demoed at Solar One, 1982 to 86 (fire)
  - 78% rock/sand, 22% oil on volume basis
  - 3460 m^3, H/D ratio = 0.75
  - 97% daily, 92% annual η (tank only)
- Nexant proposes a scaled-down Solar One tank for Saguaro
  - 330 m^3, H/D = 1.2
- All 3 have similar max operating temperature (~300 ^oC)

Solar One Thermal Storage

Fiberglass Insulation
-Wall, 12 inches
-Roof, 24 inches

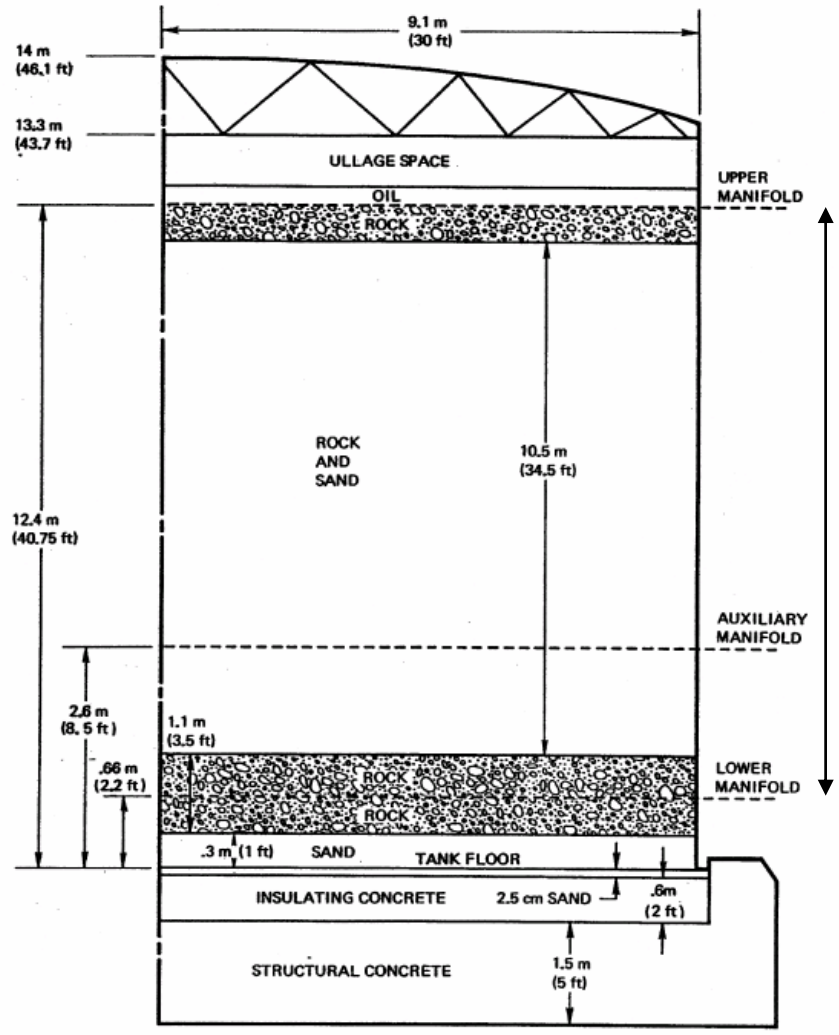

Active Height
modeled in TRNSYS

Floor thermal
mass included
in new TRNSYS
model

Validation of Type 502 thermocline model with Solar One cooldown data recorded November 5 to 22, 1982

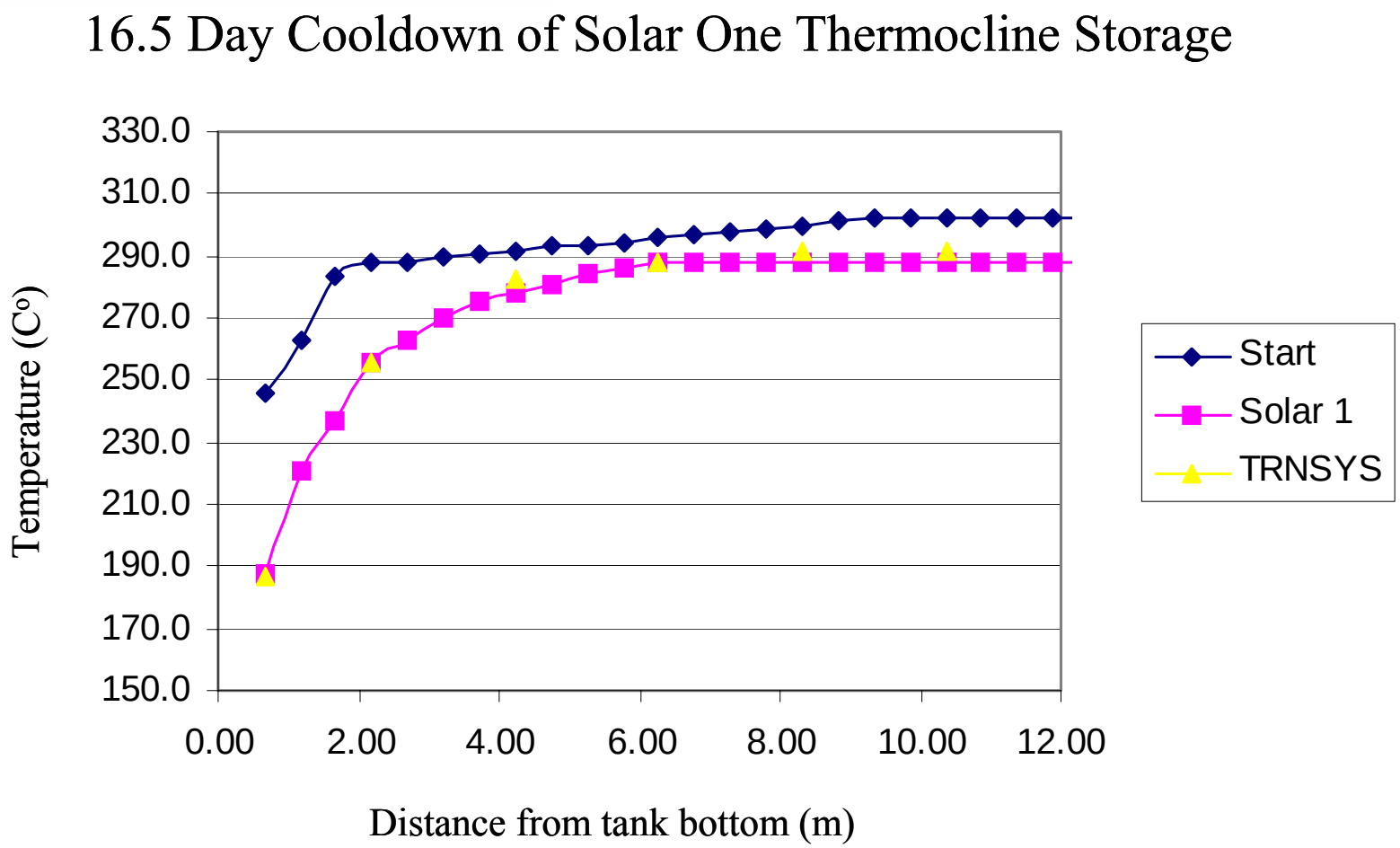

Validation of Type 502 thermocline model with Solar One discharge data recorded June 28,1983

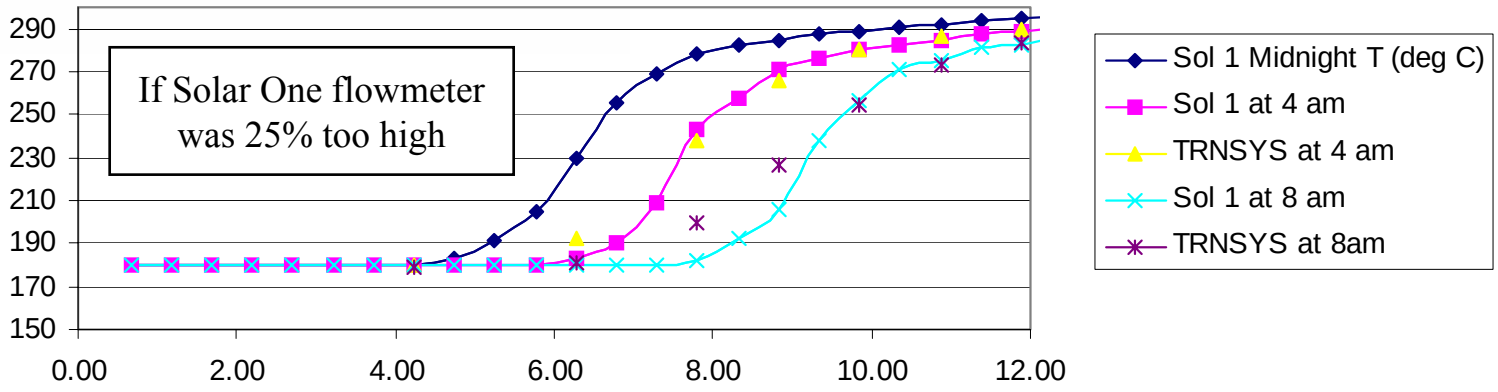

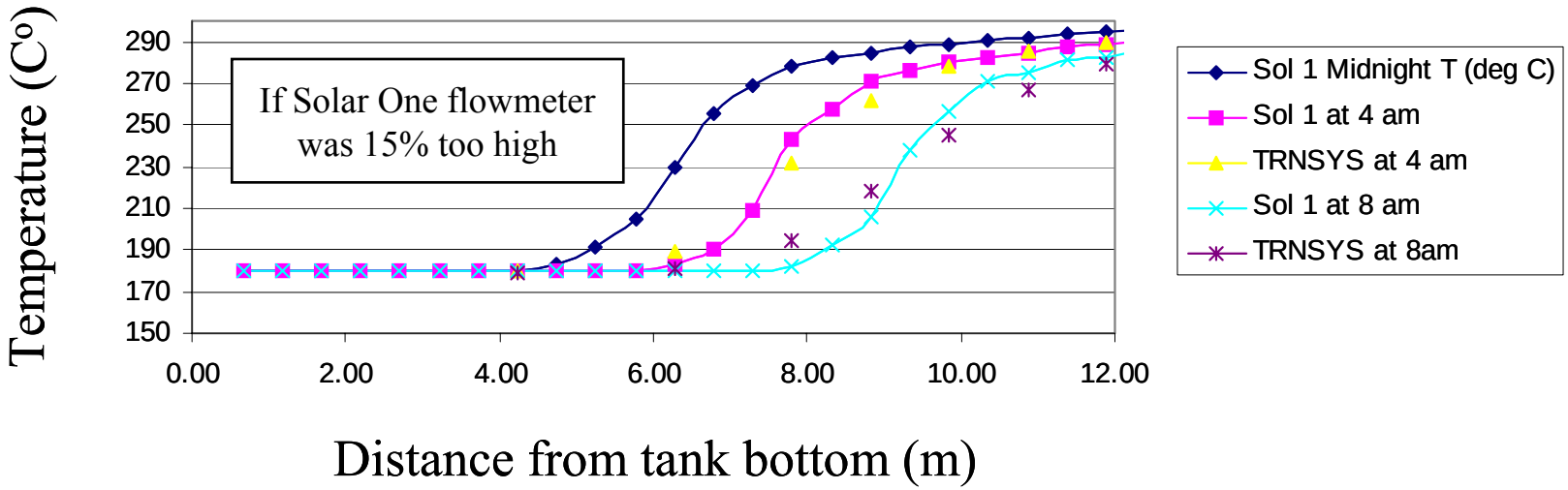

Discharge Test Validation

- SAND86-8175 states that Solar One flowmeters were apparently reading 15 to 25% high during charge/discharge tests
- TRNSYS validation also suggests that readings were too high by ~20% and validation is based on this assumption

Final Solar One validation parameters. Physical properties defined most parameters. Three parameters were "dialed" to match experiment.

Parameter	**Solar One Value** **(Saguaro)**	**Units**
Specific heat oil	0.669	Btu/lbm-F
Length of rock bed	38.6 (23)	ft
Cross-sectional area	2826 (415)	ft^2
Perimeter	188 (72)	ft
Specific heat rock	0.244	Btu/lbm-F
Rock density	165	lbm/ft^3
Wall Loss coefficient	0.041	$Btu/hr\text{-}ft^2\text{-}F$
Axial thermal conductivity	1.28	Btu/hr-ft
Roof Loss coefficient	0.015	$Btu/hr\text{-}ft^2\text{-}F$
Floor Loss coefficient	0.18	$Btu/hr\text{-}ft^2\text{-}F$
Oil density	49.3 (45.9)	lbm/ft^3
Void fraction	0.22	
Floor capacitance multiplier	1.5	

Initial Simulation Insights for Future Saguaro

- TRNSYS predicts ~3900 MWhe (gross) annual
  - Given 18800 m^2 (expanded field), 100% plant availability
  - Given NEXANT base case storage dimensions and operating strategy
    - Stop storage charging at 226 ^oC oil exit temperature
    - Stop storage discharging at 193 ^oC oil exit temperature
  - Gross annual efficiency of plant with storage (8.3%) somewhat lower than plant without storage (8.9%)
- Annual output of plant can be improved through some relatively minor optimizations
  - Increasing storage volume by 50% increases output by ~250 MWhe
    - Active diameter and length are increased from 23 to 26.3 feet
  - Relaxing dispatch strategy and increasing maximum charging temperature to >250 ^oC, may add ~75 MWhe
  - Given these improvements, annual efficiency restored to ~8.9%

Conclusions

- The thermocline storage system proposed for Saguaro should perform well
  - Install it in combination with the proposed field expansion
  - Capacity factor of plant will increase from 26% to 48% (given 100% equipment availability)
  - However, additional control complexity may make "unattended operation" impractical

Future Work

- Validate TRNSYS model with Saguaro performance data
- Expand/improve models
  - Include thermal losses of non-solar field piping
  - Include the effect of wet-bulb temperature on ORC performance
  - Plant parasitics
- Performance optimization studies