Modular Trough Systems

BIBB and Associates Inc.

- A Kiewit Company -

Modular Trough Systems

Modular Trough Systems

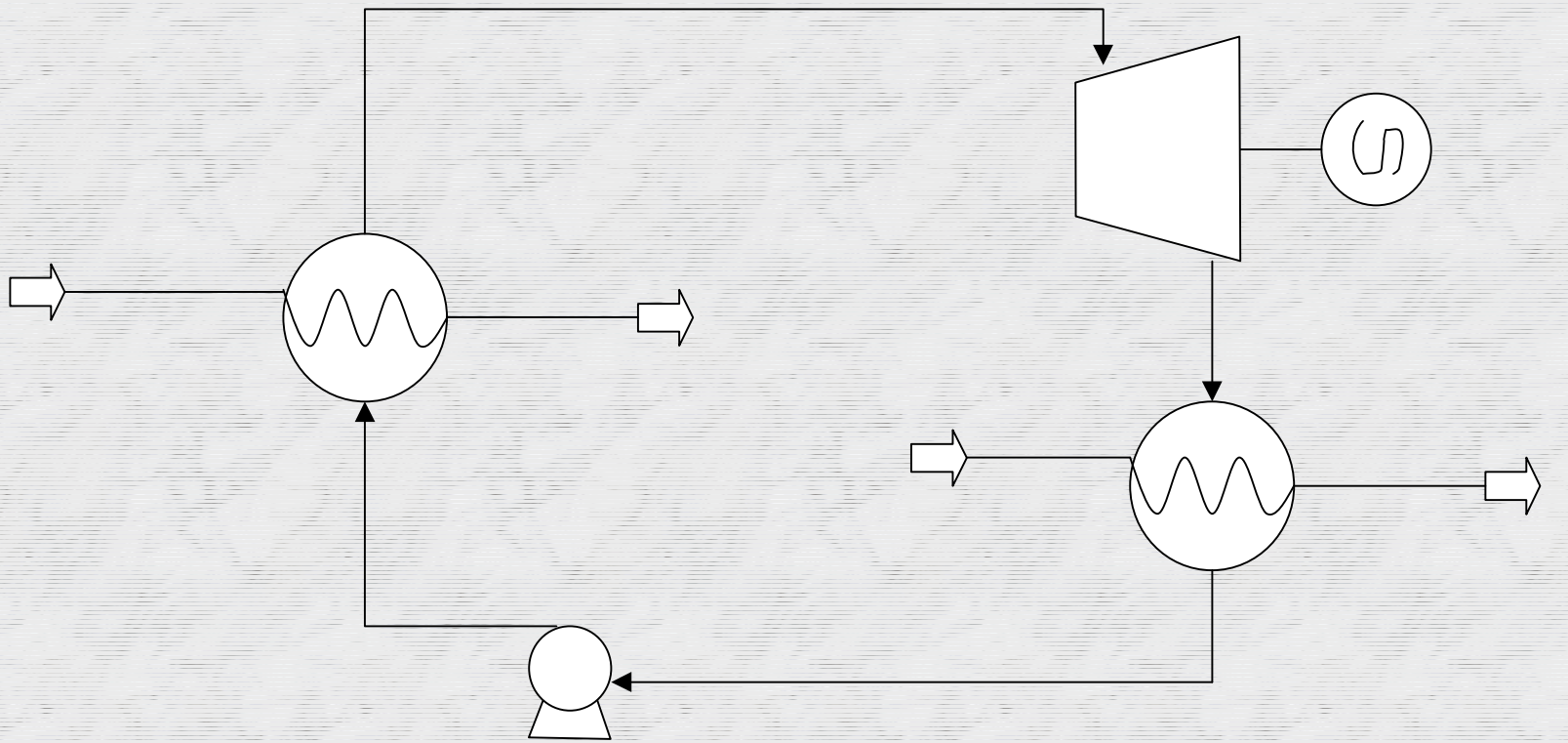

Simple Cycle

Modular Trough Systems

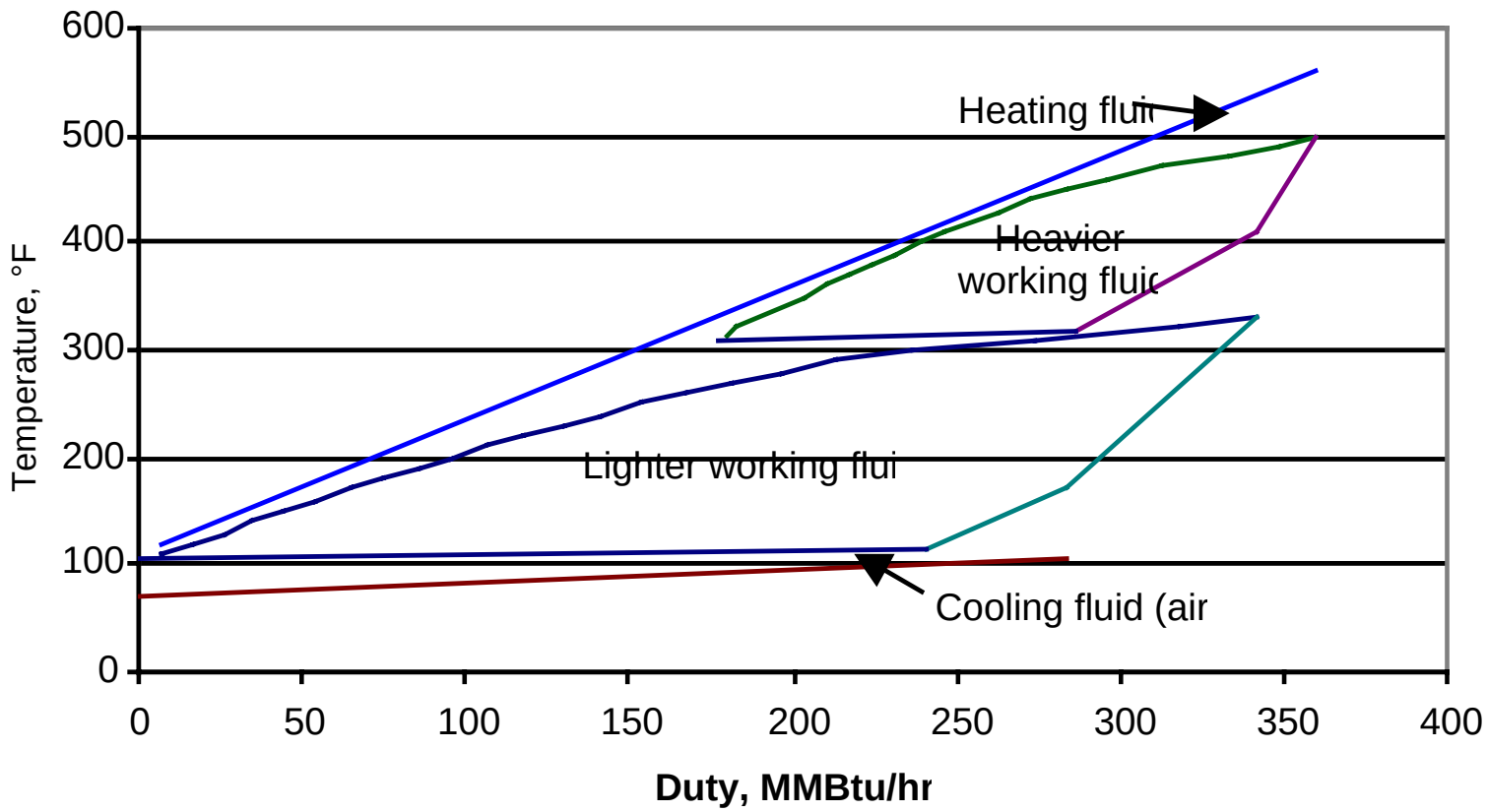

Cascade Cycle

Modular Trough Systems

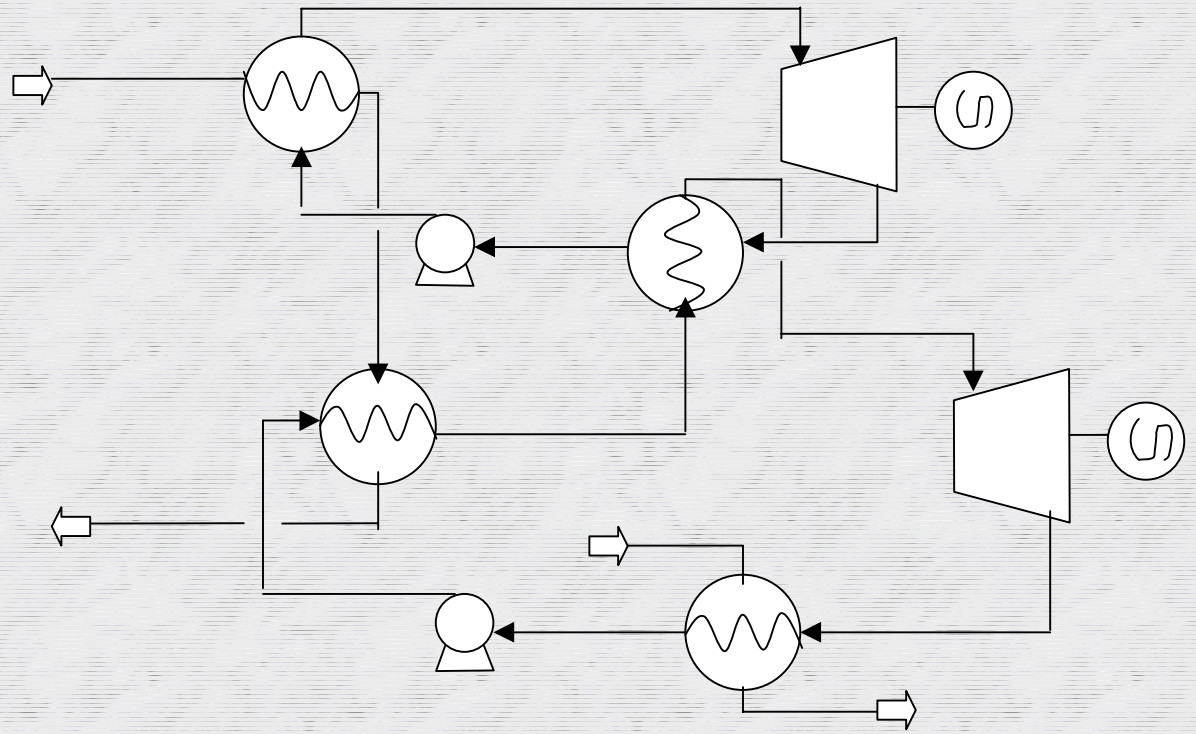

Cascade Cycle

Modular Trough Systems