EUROTROUGH II
Fullscale EUROTROUGH Collector Loop with Direct Steam Generation

A Proposal to the 5th Framework Program of the European Union

Michael Geyer
Deutsches Zentrum für Luft- und Raumfahrt
Plataforma Solar de Almeria
Spain

EUROTROUGH II Proposal Partners

EUROTrough II Consortium		
Num	**Participant Name**	**Participant Address**
P1 INA	**INABENSA Instalaciones Abengoa S.A.**	C / Manuel Velasco Pando 7 E-41007 Sevilla Spain
P2 FIC	**Fichtner** GmbH & Co.KG	P.O. Box 10 14 54 D-70013 Stuttgart Germany
P3 IBD	**IBERDROLA**	Hermosilla, 3 E-28001 Madrid Spain
P4 PSI	**Pilkington Solar International GmbH**	Mühlengasse 7 D-50667 Köln Germany
P5 PSI	**Schlaich, Bergermann und Partner**	Hohenzollernstr. 1 D-70178 Stuttgart Germany
P6 CIE	**CIEMAT** Plataforma Solar de Almeria.	Carretera Senes S/N E-04200 Tabernas Spain
P7 DLR	**DLR** Deutsches Zentrum für Luft- und Raumfahrt e.V	Linder Höhe D-51140 Köln Germany
P8 SOL	**SOLEL** Solar Systems Ltd.	P.O. Box 45033 Jerusalem 91450 Israel

DLR

EUROTrough II Objectives

- Extend the total collector length from today's 100m state-of-the-art to 150m by combining 12 of the segments developed in the EUROTrough I project to a single solar collector assembly. Such an increase in single collector length by 50% will reduce the number of drive pylons, tracking mechanisms, controllers and flexible joints of a solar field accordingly by 33%. It further will reduce the collector end losses.
- Construct for the first time a full size collector loop of up to 500m length with the tilt of the site (app. 3%). Such a design will significantly reduce land preparation costs, since it avoids the need of excavating terraces. This also will reduce the cost and performance losses of interconnection piping between the terraces.
- The EUROTrough loop will also include the direct steam generation technology developed during the DISS project and offer at the same time the strongly needed possibility of parallel row tests with solar direct steam.

EUROTROUGH II Working Packages

As a result of the JOULE funded DISS project on the development of direct solar steam technology and of the EUROTrough I project on the development of a new structural design concept, the EUROTrough II project will construct and qualify a full scale EUROTrough collector loop as the basic element of future commercial solar fields. The work includes the following R&D tasks:

- Design of the EUROTrough loop and its connection to the DISS loop
- Fabrication of parts and procurement of components
- Assembly and Accepance Testing
- One year qualification testing and experimental performance evaluation
- Physical performance modelling, cost monitoring and design optimization

EUROTROUGH II Collector Geometry

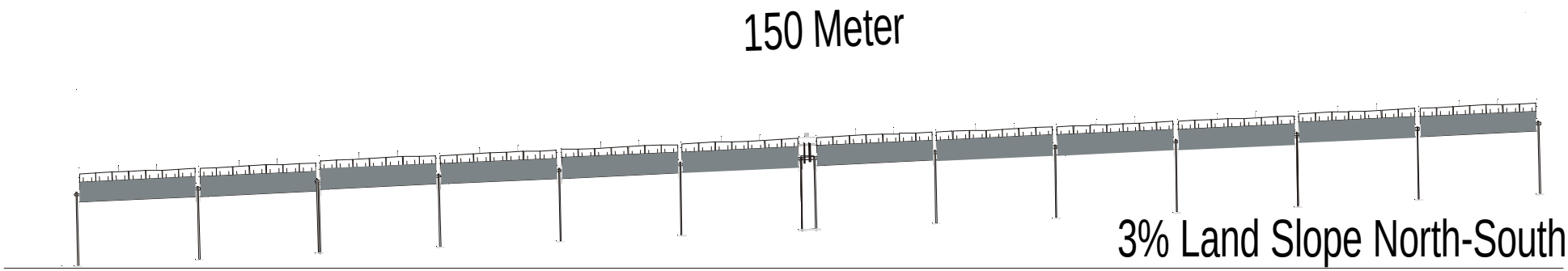

Combining DISS and EUROTROUGH II at PSA

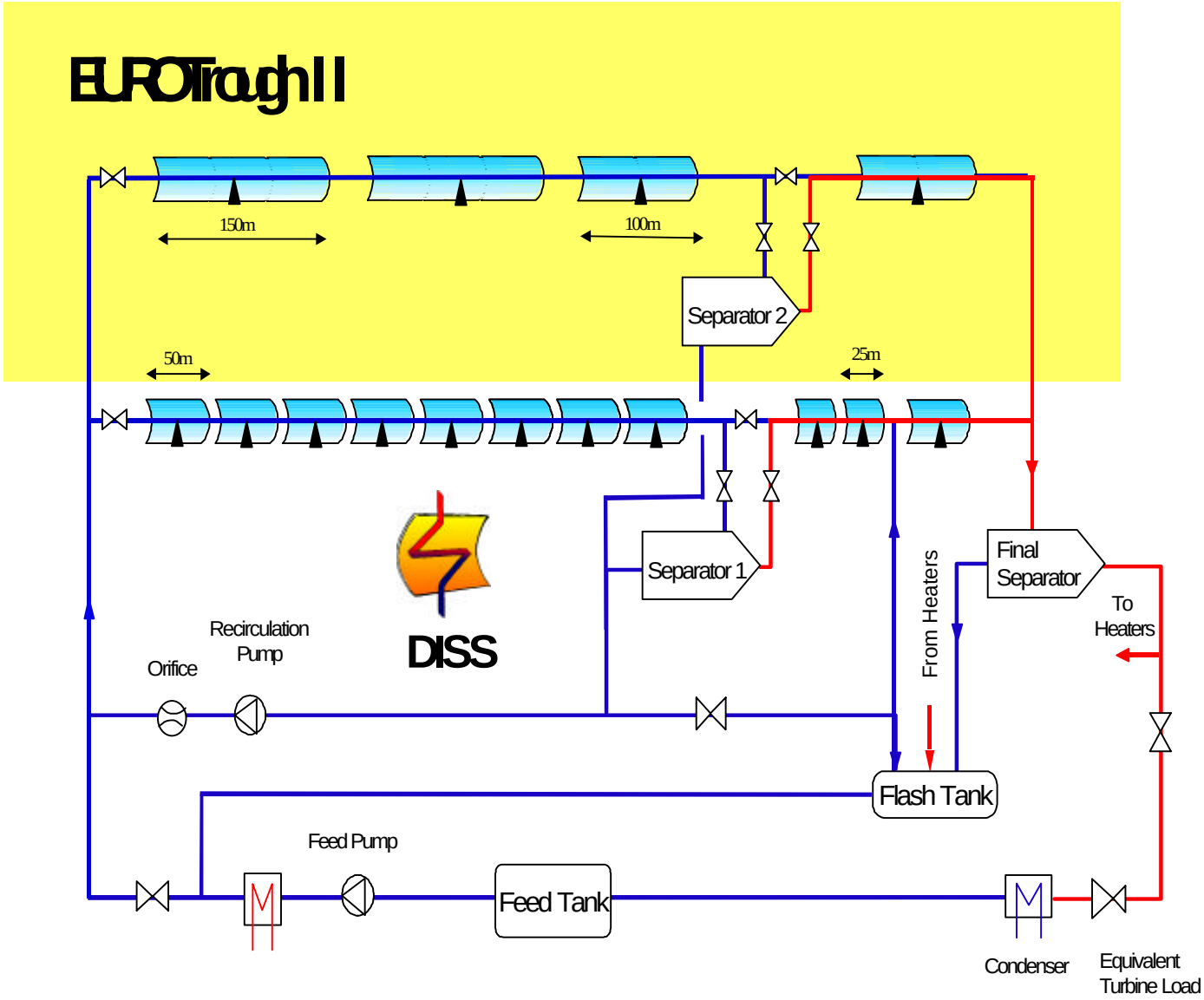

Artist's View of EUROTROUGH II at PSA

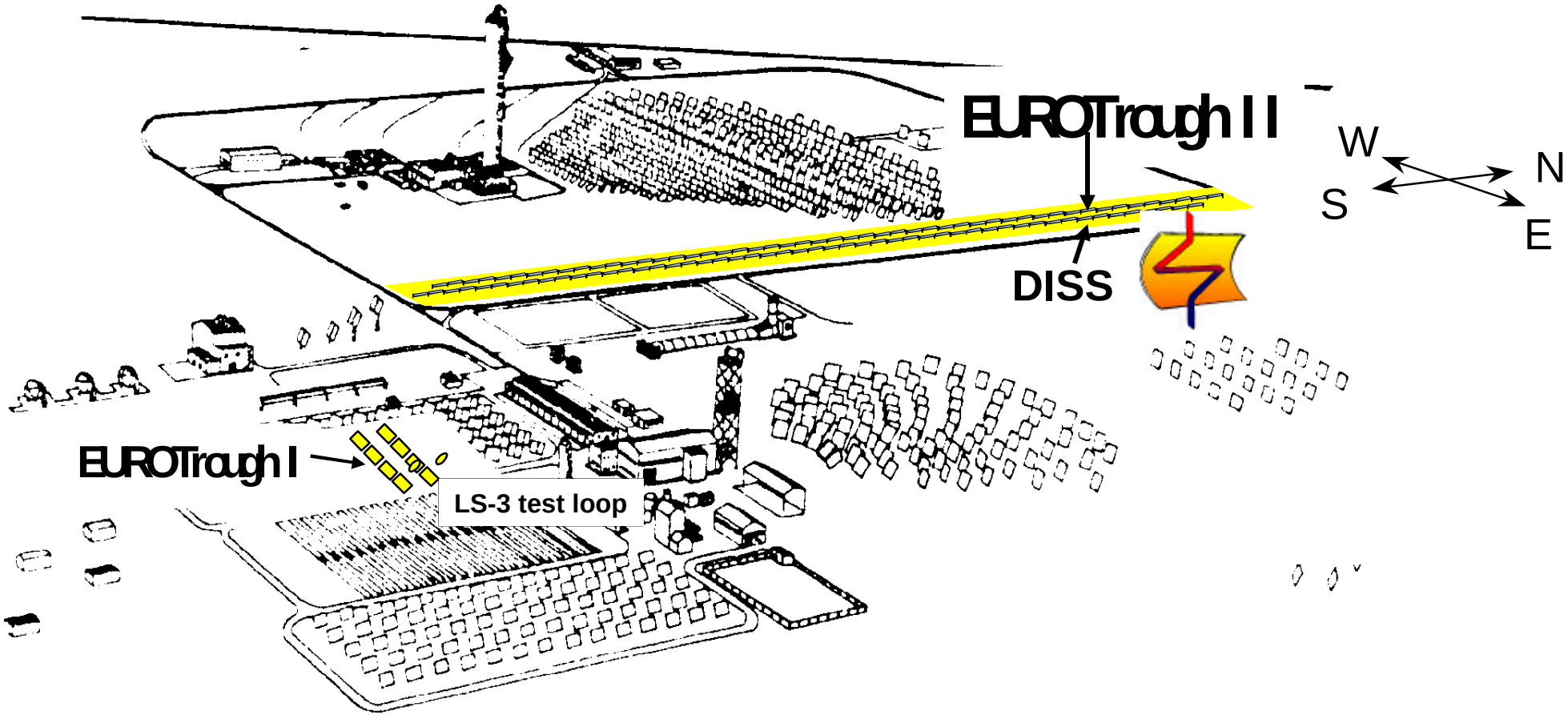
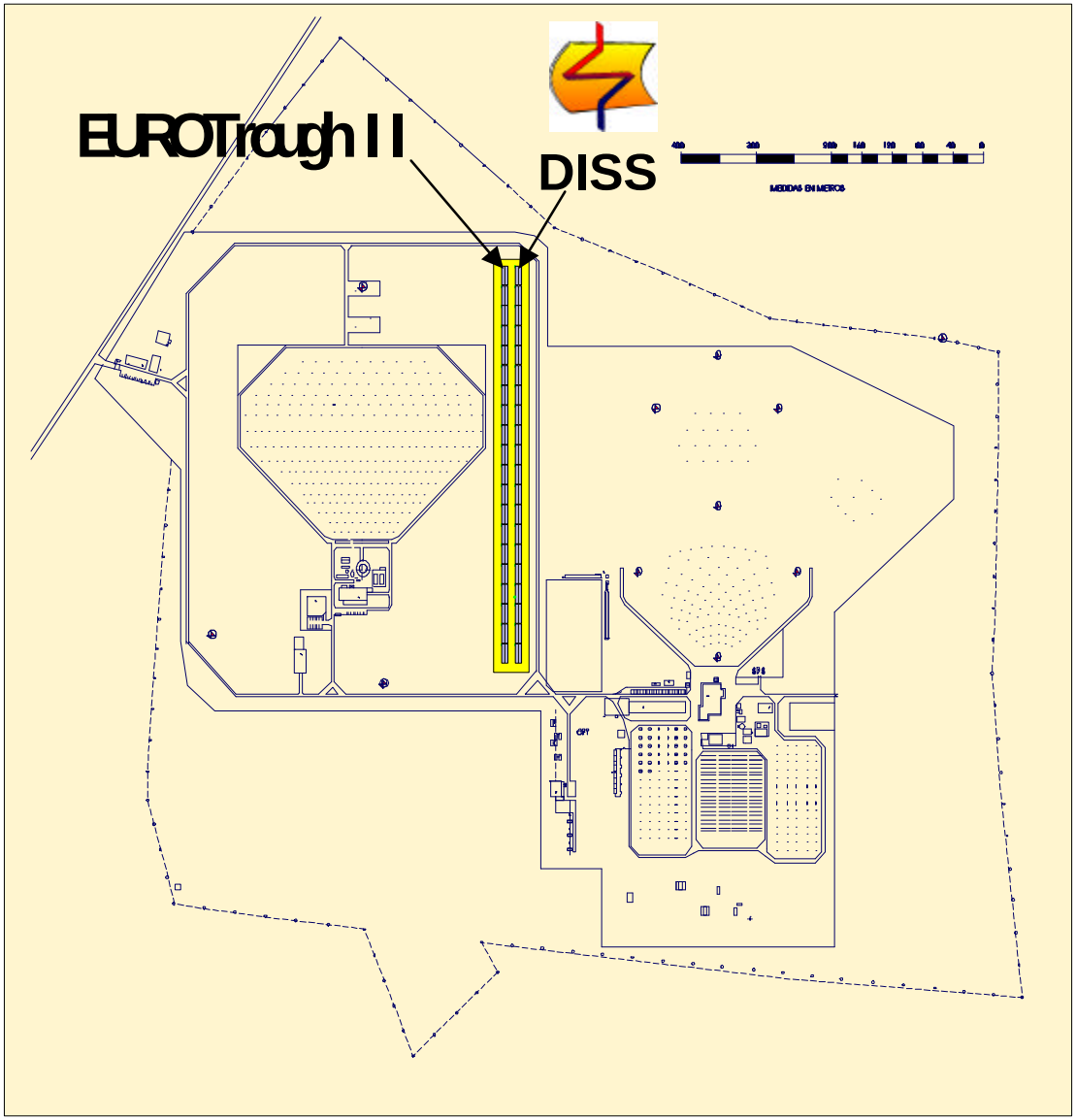
Footprint of EUROTROUGH II at PSA