National Renewable Energy Laboratory
A national laboratory of the U.S. Department of Energy
Office of Energy Efficiency & Renewable Energy
Innovation for Our Energy Future

Thermochemical Ethanol via Direct Gasification and Mixed Alcohol Synthesis of Lignocellulosic Biomass

A. Dutta and S.D. Phillips

Technical Report
NREL/TP-510-45913
July 2009

NREL is operated for DOE by the Alliance for Sustainable Energy, LLC Contract No. DE-AC36-08-GO28308

Thermochemical Ethanol via Direct Gasification and Mixed Alcohol Synthesis of Lignocellulosic Biomass

A. Dutta and S.D. Phillips

Prepared under Task No. BB07.3710

Technical Report
NREL/TP-510-45913
July 2009

National Renewable Energy Laboratory
1617 Cole Boulevard, Golden, Colorado 80401-3393
303-275-3000 • www.nrel.gov

NREL is a national laboratory of the U.S. Department of Energy
Office of Energy Efficiency and Renewable Energy
Operated by the Alliance for Sustainable Energy, LLC

Contract No. DE-AC36-08-GO28308

NOTICE

This report was prepared as an account of work sponsored by an agency of the United States government. Neither the United States government nor any agency thereof, nor any of their employees, makes any warranty, express or implied, or assumes any legal liability or responsibility for the accuracy, completeness, or usefulness of any information, apparatus, product, or process disclosed, or represents that its use would not infringe privately owned rights. Reference herein to any specific commercial product, process, or service by trade name, trademark, manufacturer, or otherwise does not necessarily constitute or imply its endorsement, recommendation, or favoring by the United States government or any agency thereof. The views and opinions of authors expressed herein do not necessarily state or reflect those of the United States government or any agency thereof.

Available electronically at http://www.osti.gov/bridge

Available for a processing fee to U.S. Department of Energy
and its contractors, in paper, from:
U.S. Department of Energy
Office of Scientific and Technical Information
P.O. Box 62
Oak Ridge, TN 37831-0062
phone: 865.576.8401
fax: 865.576.5728
email: mailto:reports@adonis.osti.gov

Available for sale to the public, in paper, from:
U.S. Department of Commerce
National Technical Information Service
5285 Port Royal Road
Springfield, VA 22161
phone: 800.553.6847
fax: 703.605.6900
email: orders@ntis.fedworld.gov
online ordering: http://www.ntis.gov/ordering.htm

Printed on paper containing at least 50% wastepaper, including 20% postconsumer waste

Acknowledgements

We thank the Department of Energy for funding this work, Richard Bain and Andy Aden for reviewing the work and providing input, and Sara Havig for editing and formatting the document.

Executive Summary

This work continues the study of thermochemical conversion processes for biomass to ethanol. An earlier study by Phillips et al.[2] (NREL/TP-510-41168) looked into a process that used an indirect gasifier and showed that the process is capable of producing cost-competitive cellulosic ethanol below the $1.07 per gallon minimum plant gate price targeted in 2012 using 2005 cost assumptions.

A high-pressure oxygen-blown direct gasifier is used in this study. The conversion costs for this process are higher than the 2012 cost target. This is primarily because of two reasons:

1. Extra capital cost of an air-separation unit
2. Lower conversion of methane to syngas after reformation at the higher pressures in this process.

The higher cost was expected and was the reason for the indirect gasifier process being studied first. Most of the assumptions in this study are similar to the indirect gasification process; this allows direct comparison between the processes. The process includes feed preparation, gasification, gas cleanup and conditioning, alcohol synthesis and purification, and the additional air separation unit. The minimum ethanol selling price (MESP) for the base case process was $1.57/gallon using 2005 cost assumptions, compared with $1.01/ gallon in the indirect gasification process. The MESP was $1.95/gallon using 2007 cost assumptions and 2012 performance targets (compared with $1.29/gallon for the indirect process).

The technical barriers in tar reforming and alcohol synthesis are similar for the two processes, but the high pressure process is handicapped by lower equilibrium conversions during tar and methane reforming. A consequence of the lower methane conversion is the required addition of CO_2 for the adjustment of the H_2:CO ratio in the syngas going to the synthesis reactor; this adds to the conversion cost.

There are challenges in the operability and on-time availability of biomass gasifiers, as with most other operations handling solids. This can be an added factor, beyond the cost, in the choice of gasifiers. The high-pressure direct gasification process may appear less prohibitive if there exists an air separation unit for other purposes and oxygen can be produced at a lower cost using economies of scale. The economics of the high pressure gasification process is expected to improve for synthesis fuels that operate at higher H_2:CO ratios such as methanol, methanol-to-gasoline, and Fischer-Tropsch liquids.

Table of Contents

Acknowledgements iii
Executive Summary iv
1 Introduction 1
1.1 Analysis Approach 5
1.2 Process Design Overview 9
1.3 Feedstock and Plant Size 11
2 Process Design 13
2.1 Process Design Basis 13
2.2 Feed Handling and Drying – Area 100 13
2.3 Gasification – Area 200 14
2.4 Gas Cleanup and Conditioning – Area 300 16
2.5 Alcohol Synthesis – Area 400 20
2.6 Alcohol Separation – Area 500 25
2.7 Steam System and Power Generation – Area 600 26
2.8 Cooling Water and Other Utilities – Area 700 28
2.9 Air Separation Unit – Area 800 29
2.10 Additional Design Information 30
2.11 Pinch Analysis 30
2.12 Energy Balance 31
2.13 Water Issues 33
3 Process Economics 34
3.1 Capital Costs 34
3.2 Operating Costs 37
3.3 Value of Higher Alcohol Co-Products 41
3.4 Minimum Ethanol Selling Price 41
4 Process Economics, Sensitivity Analyses, and Alternate Scenarios 42
4.1 Financial Scenarios 46
4.2 Feedstocks 46
4.3 Thermal Conversion 49
4.4 Cleanup & Conditioning 50
4.5 Fuels Synthesis 50
4.6 Markets 50
4.7 Operating the Gasifier at a Lower Pressure 51
4.8 Hypothetical Case to Delineate the Impact of Pressure on CH_4 Conversion 51
5 Conclusions 51
6 Future Work 52
7 References 54

List of Figures

Figure 1. U.S. list prices for ethanol 2
Figure 2. Estimated capital intensities for biomass-to-methanol processes 4
Figure 3. Approach to process analysis 5
Figure 4. *Chemical Engineering* Magazine's Plant Cost Indices 8
Figure 5. Block flow diagram 9
Figure 6. Expected availability of biomass 12
Figure 7. Cost contribution details from each process area 43
Figure 8. Effect of cost year on MESP 44
Figure 9. Results of sensitivity analyses 45
Figure 10. Sensitivity analysis of biomass ash content 47
Figure 11. Sensitivity analysis of biomass moisture content 48
Figure 12. Sensitivity analysis of raw syngas diverted for heat and power due to biomass moisture content 49

List of Tables

Table 1. *Chemical Engineering* Magazine's Plant Cost Indices 8
Table 2. Ultimate Analysis of Hybrid Poplar Feed 12
Table 3. Gasifier Operating Parameters, Gas Compositions, and Efficiencies 15
Table 4. Target Design Performance of Tar Reformer in the Phillips et al. Report[2] 16
Table 5. Conversions Used in the Tar Reformer 17
Table 6. Target Design Tar Reformer Conditions and Outlet Gas Composition 18
Table 7. Acid Gas Removal Design Parameters 19
Table 8. Process Conditions for Mixed Alcohols Synthesis 21
Table 9. System of Reactions for Mixed Alcohol Synthesis 23
Table 10. Mixed Alcohol Reaction Performance Results 23
Table 11. Mixed Alcohol Synthesis Product Distributions 24
Table 12. Plant Power Requirements 28
Table 13. Utility and Miscellaneous Design Information 30
Table 14. Overall Energy Analysis (LHV basis) 32
Table 15. Process Water Demands for Thermochemical Ethanol via Direct Gasification 34
Table 16. General Cost Factors in Determining Total Installed Equipment Costs 35
Table 17. Cost Factors for Indirect Costs 35
Table 18. Feed Handling & Drying and Gasifier & Gas Cleanup Costs from the Literature Scaled to 2,000 tonne/day Plant[49] 36
Table 19. System Design Information for Gasification References[49] 36
Table 20. Variable Operating Costs 38
Table 21. Labor Costs 39
Table 22. Other Fixed Costs 40
Table 23. Salary Comparison 40
Table 24. Economic Parameters 42

1 Introduction

This work addresses a policy initiative by the Federal Administration to apply United States Department of Energy (DOE) research to broadening the country's domestic production of economic, flexible, and secure sources of energy fuels. President Bush had proposed the Advanced Energy Initiative,[1] which outlines significant new investments and policies to change the way we fuel our vehicles and the way we power our homes and businesses. The specific goal for biomass in the Advanced Energy Initiative is to foster the breakthrough technologies needed to make cellulosic ethanol cost-competitive with corn-based ethanol by 2012.

A previous report[2] studied the production of cellulosic ethanol with syngas from indirect gasification. This report extends the study of thermochemical conversion processes by looking into alcohol production using syngas from high-pressure oxygen blown direct gasifiers. The higher pressure in the gasification and tar reforming sections requires a supply of higher pressure steam. The biomass feed also needs to be pressurized before feeding. The oxygen blown gasifier also requires an Air Separation Unit (ASU) to provide oxygen. Since the syngas output is also at a higher pressure, one of the compressors used in the indirect gasification process to pressurize the syngas prior to acid gas removal is eliminated in this process. The remaining process is similar to the indirect steam gasification process. A conscious decision was made to keep overall process design similar to the previous study[2] in order to focus on the effect of the type of gasifier on the overall process and economics. The heat exchanger network design after pinch analysis is different, which is expected because of a different thermal profile for this process. The numbers reported in the report use the same cost year and feedstock costs as the indirect gasification process. Results are also presented in 2007 dollars and with updated feedstock costs in Appendix I.

The intent of this report is to be a standalone reference without having to refer back to the indirect gasifier report.[2] Hence some sections have been taken verbatim from that report. Some information in the appendices of the indirect gasifier study[2] was not repeated.

The indirect steam gasification process[2] was studied first because it was known that the cost of the high pressure oxygen blown direct gasification process would likely be higher, based on similar experience with methanol production. This is discussed in detail later in this introduction. As was expected, this study does predict a higher cost for the direct gasification process.

In previous biomass conversion design reports by the National Renewable Energy Laboratory (NREL), a benchmark for achieving production of ethanol from cellulosic feedstocks that would be "cost competitive with corn-ethanol" was quantified as $1.07 per gallon ethanol production cost[3] (where none of these values have been adjusted to a common cost year). The value can be put in context with the historic ethanol price data as shown in Figure 1.[4] The $1.07 per gallon value represents the low side of the historical fuel ethanol prices. Given this historical price data, it is viewed that cellulosic ethanol would be commercially viable at this cost of production.

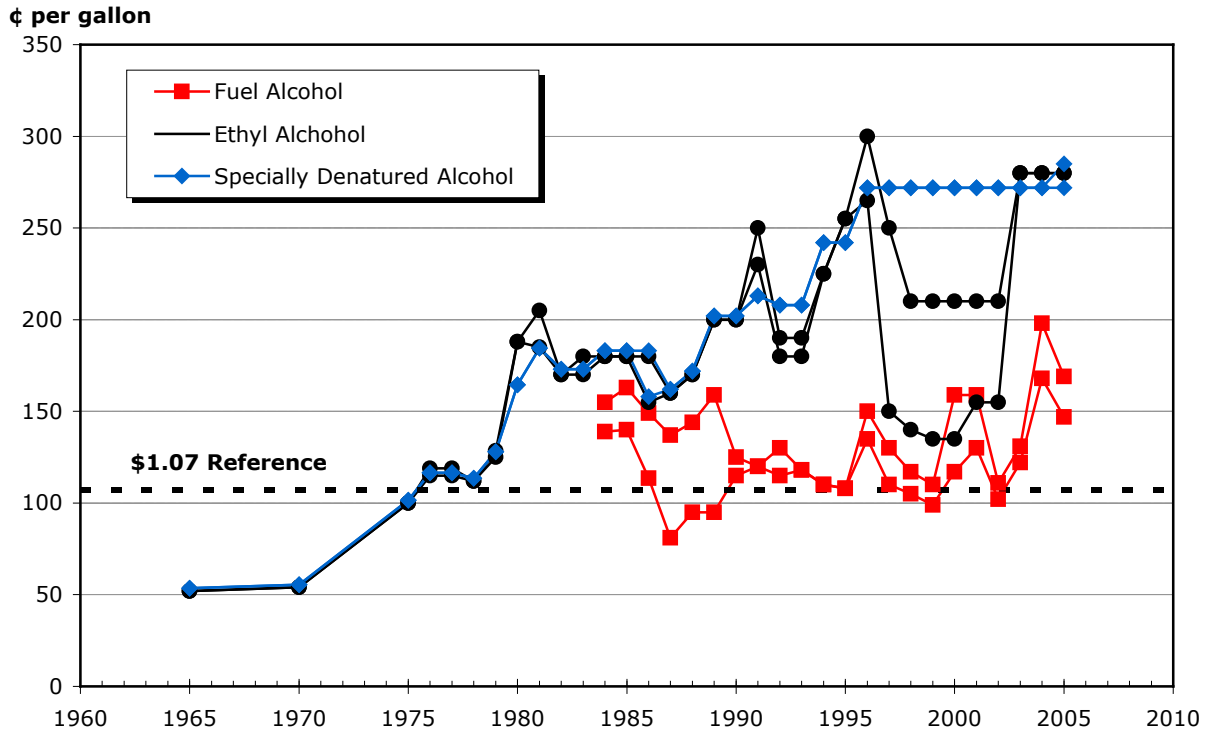

Figure 1. U.S. list prices for ethanol[a]

Conceptual process designs and associated design reports have previously been done by NREL for converting cellulosic biomass feedstock to ethanol via biochemical pathways. Two types of biomass that have been considered are yellow poplar[5] and corn stover.[3] These design reports have been useful to NREL and DOE program management for two main reasons. First of all, they enable *comparison of research and development projects*. A conceptual process design helps to direct research by establishing a benchmark to which other process configurations can be compared. Proposed research and the anticipated results can be translated into a new design; the economics incorporating these anticipated results can be determined and this new design can be compared to the benchmark case. Following this procedure for several proposed research projects allows DOE to make competitive funding decisions based on which projects have the greatest potential to lower the cost of ethanol production. Complete process design and economics are required for such comparisons because changes in performance in one research area may have significant impacts in other process areas not part of that research program (e.g., impacts in product recovery or waste treatment). The impacts on the other areas may have significant and unexpected impacts on the overall economics.

Secondly, they enable c*omparison of ethanol production to other fuels.* A cost of production has also been useful to study the potential ethanol market penetration from technologies to convert lignocellulosic biomass to ethanol. The cost estimates developed must be consistent with

[a] The curve marked "Ethyl Alcohol" is for 190 proof, USP, tax-free, in tanks, delivered to the East Coast. That marked "Specially Denatured Alcohol" is for SDA 29, in tanks, delivered to the East Coast, and denatured with ethyl acetate. That marked "Fuel Alcohol" is for 200 proof, fob works, bulk, and denatured with gasoline.

applicable engineering, construction, and operating practices for facilities of this type. The complete process (including not only industry-standard process components but also the newly researched areas) must be designed and their costs determined.

The process design in this report is part of an evaluation process of options to be considered to addresses the conversion of biomass to ethanol via thermochemical (TC) pathways that are expected to be demonstrated at the pilot-unit level by 2012. This assessment matches up:

- Currently established and published technology
- Technology currently under development or shortly to be under development from DOE Office of Biomass Program (OBP) funding (see Appendix B of the Phillips et al. report[2] for these research targets and values)
- Biomass sources in the 2012 time frame consistent with the Billion Ton Vision study.[6]

This assessment directly builds upon the design report for the production of mixed alcohols using the indirect steam gasification process.[2] The indirect gasification process was modified to include the high pressure oxygen blown direct gasifier and the air separation unit. Much of the modifications were based on an earlier report comparing the direct and indirect gasifiers.[7]

Indirect steam gasification was the first technology around which this process was developed based upon previous techno-economic studies for the production of methanol and hydrogen from biomass.[8] The sub-process operations for ethanol production are very similar to those for methanol production (although the specific process configuration will be different). The general process areas include: feed preparation, gasification, gas cleanup and conditioning, and alcohol synthesis and purification.

Gasification involves the devolatilization and conversion of biomass in an atmosphere of steam and/or oxygen to produce a medium-calorific value gas. There are two general classes of gasifiers. *Partial oxidation (POX)* gasifiers (directly-heated gasifiers) use the exothermic reaction between oxygen and organics to provide the heat necessary to devolatilize biomass and to convert residual carbon-rich chars. In POX gasifiers, the heat to drive the process is generated internally within the gasifier. A disadvantage of POX gasifiers is that oxygen production is expensive and typically requires large plant sizes to improve economics.[9]

The second general class, *steam gasifiers* (indirectly-heated gasifiers), accomplish biomass heating and gasification through heat transfer from a hot solid or through a heat transfer surface. Either byproduct char and/or a portion of the product gas can be combusted with air (external to the gasifier itself) to provide the energy required for gasification. Steam gasifiers have the advantage of not requiring oxygen; but since most operate at low pressure, they require product gas compression for downstream purification and synthesis unit operations.

A number of POX and steam gasifiers are under development and have the potential to produce a synthesis gas suitable for liquid fuel synthesis. These gasifiers have been operated in the 4 to 350 ton per day scale. The decision as to which type of gasifier (POX or steam) will be the most economic depends upon the entire process, not just the cost for the gasifier itself. One indicator for comparing processes is “capital intensity,” the capital cost required on a per unit product

basis. Figure 2 shows the capital intensity of methanol processes[10,11,12,13,14,15] based on indirect steam gasification and direct POX gasification. This figure shows that steam gasification capital intensity is comparable or lower than POX gasification. The estimates indicate that both steam gasification and POX gasification processes should be evaluated, although evaluation of steam gasification is a reasonable first choice. Hence this study follows the indirect gasification study.[2]

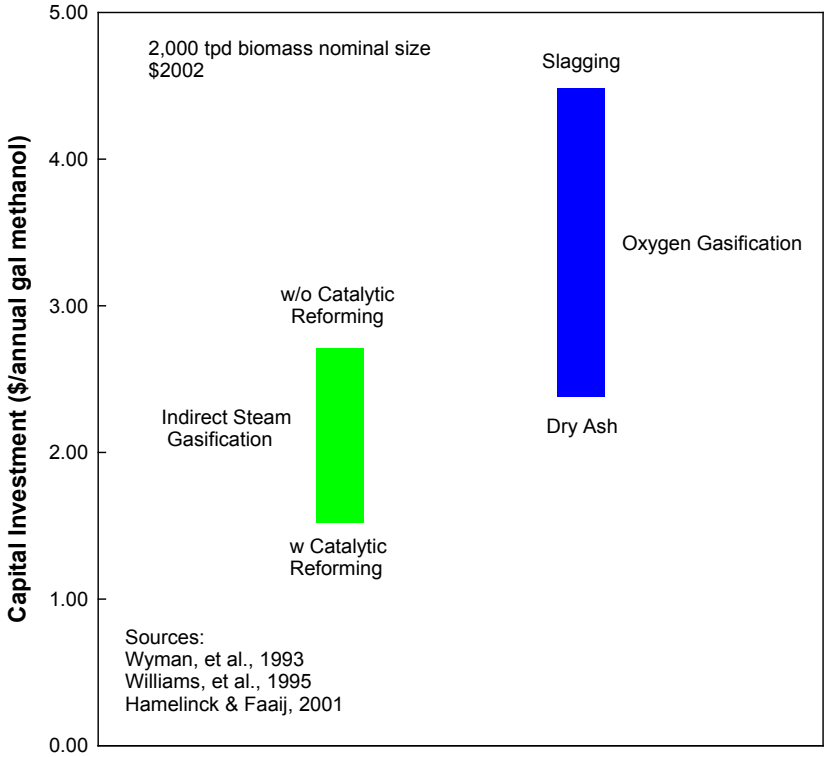

Figure 2. Estimated capital intensities for biomass-to-methanol processes

Another philosophy applied to the process development was to make the process "electrical energy neutral." The aim was to make all the electricity necessary for the process while trying to minimize excess electricity generation because it cuts down alcohol production. A "zero-electricity" process was possible for the indirect gasification process.[2] However, for the direct gasification process it was found that process steam requirements leave high temperature streams that are capable of generating electricity in excess of what is required by the plant.

Alternately, an external supply of fossil fuels such as coal or natural gas could be used to maintain process temperatures in the tar reformer or to generate steam while maximizing the amount of syngas that goes towards alcohol production. However, the decision was made to follow the directions specified in the indirect gasification process design[2] and make the plant energy self-sufficient with no additional fuel supplied for heat and power.

1.1 Analysis Approach

The general approach used in the development of the process design, process model, and economic analysis is depicted in Figure 3. The first step was to assemble a general process flow schematic or more detailed process flow diagrams (PFDs). (See Appendix F for the associated PFDs for this design). From this, detailed mass and energy balance calculations were performed around the process. For this design, Aspen Plus® software was used. Data from this model was then used to properly size all process equipment and fully develop an estimate of capital and operating costs. These costs could potentially have been used in several types of economic analysis. However, for this design, a discounted cash flow rate of return (DCFROR) analysis was used to determine the Minimum Ethanol Selling Price (MESP) necessary to meet a small hurdle rate (IRR) of 10%.

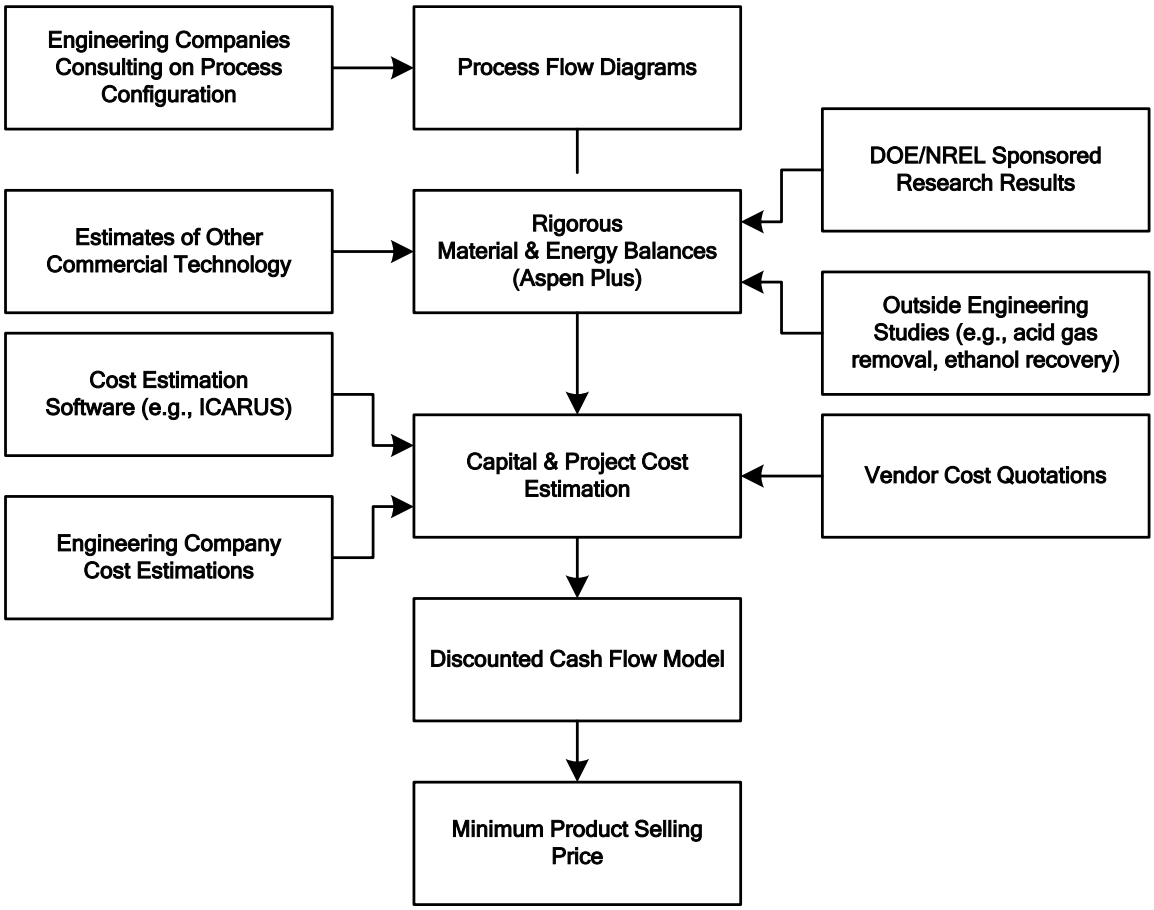

Figure 3. Approach to process analysis

This process was developed by modifying the indirect gasification process[2] by inserting an Air Separation Unit and changing the indirect gasifier to a direct gasifier. These modifications were

based on previous work done at NREL to compare the two gasification processes.[7] Specific information about sub-processes was derived from these previous reports.[2,7] Some of the information for the indirect gasification process design report,[2] parts of which are also applicable to this process, was obtained as a result of a subcontract with Nexant Inc.[16,17,18,19]

Aspen Plus version 2004.1 was used to determine the mass and energy balances for the process. The operations were separated into eight major HIERARCHY areas:

- Feed Handling and Drying (Area 100)
- Gasification (Area 200)
- Cleanup and Conditioning (Area 300)
- Alcohol Synthesis (Area 400)
- Alcohol Separation (Area 500)
- Steam Cycle (Area 600)
- Cooling Water (Area 700)
- Air Separation Unit (Area 800)

Overall, the Aspen simulation consists of about 320 operation blocks (such as reactors, flash separators, etc.), 820 streams (mass, heat, and work), and 64 control blocks (design specs and calculator blocks). Many of the gaseous and liquid components were described as distinct molecular species using Aspen Plus's own component properties database. The raw biomass feedstock, ash, and char components were modeled as non-conventional components. There was more detail and rigor in some blocks (e.g., distillation columns) than in others (e.g., conversion extent in the alcohol synthesis reactor and the air separation unit). Because this design processes three different phases of matter (solid phase, gas phase, and liquid phase), no single thermodynamics package was sufficient. Instead, four thermodynamics packages were used within the Aspen simulation to give more appropriate behavior. The "PR-BM" and "RKS-BM" options were used throughout much of the process for high temperature, high pressure phase behavior. The non-random two-liquid "NRTL" option with ideal gas properties was used for alcohol separation calculations. The 1987 Steam Table properties were used for the steam cycle calculations. Finally, the ELECNRTL package was used to model the electrolyte species potentially present within the quench water system.

The process economics are based on the assumption that this is the "nth" plant, meaning that several plants using this same technology will have already been built and are operating. This means that additional costs for risk financing, longer start-ups, and other costs associated with first-of-a-kind plants are not included.

The capital costs were developed from a variety of sources. For some sub-processes that use well known technology and can be purchased as modular packages (i.e., amine treatment, acid gas removal, air separation unit), an overall cost for the package unit was used. Many of the common equipment items (tanks, pumps, simple heat exchangers) were costed using the Aspen Icarus™ Questimate® and Aspen Icarus Process Evaluator® costing software. Other more specific unit

operations (gasifier, molecular sieve, etc.) used cost estimates from other studies and/or from vendor quotes. As documented in the indirect gasifier design report,[2] the installed capital costs were developed using general plant-wide factors. The installation costs incorporated cost contributions not only for the actual installation of the purchased equipment but also for instrumentation and controls, piping, electrical systems, buildings, yard improvements, etc. These are also described in more detail in Section 3.

The purchased component equipment costs reflect the base case for equipment size and cost year. The sizes needed in the process may actually be different than what was specifically designed. Instead of re-costing in detail, an exponential scaling expression was used to adjust the base equipment costs:

$$\text{New Cost} = \left(\text{Base Cost}\right)\left(\frac{\text{New Size}}{\text{Base Size}}\right)^{n}$$

where n is a characteristic scaling exponent (typically in the range of 0.6 to 0.7). The sizing parameters are based upon some characteristic of the equipment related to production capacity, such as inlet flow or heat duty in a heat exchanger (appropriate if the log-mean temperature difference is known not to change greatly). Generally these related characteristics are easier to calculate and give nearly the same result as resizing the equipment for each scenario. The scaling exponent n can be inferred from vendor quotes (if multiple quotes are given for different sizes), from multiple Questimate estimates at different sizes, or from a standard reference (such as Garrett,[20] Peters and Timmerhaus,[21] or Perry et al.[22]).

Since a variety of sources were used, the bare equipment costs were derived based upon different cost years. Therefore, all capital costs were adjusted with the *Chemical Engineering* (CE) magazine's Plant Cost Index[23] to a common basis year of 2005:

$$\text{New Cost} = \left(\text{Base Cost}\right)\left(\frac{\text{Cost Index in New Year}}{\text{Cost Index in Base Year}}\right).$$

The CE indices used in this study are listed in Table 1 and depicted in Figure 4. Notice that the indices were very nearly the same for 2000 to 2002 (essentially zero inflation) but take a very sharp increase after 2003 (primarily due to a run-up in worldwide steel prices). Appendix I shows the results using 2007 as the base year and a modified feedstock cost.

Table 1. *Chemical Engineering* Magazine's Plant Cost Indices

Year	Index	Year	Index
1990	357.6	1999	390.6
1991	361.3	2000	394.1
1992	358.2	2001	394.3
1993	359.2	2002	395.6
1994	368.1	2003	402.0
1995	381.1	2004	444.2
1996	381.7	2005	468.2
1997	386.5	2006	507.2
1998	389.5	2007	525.4

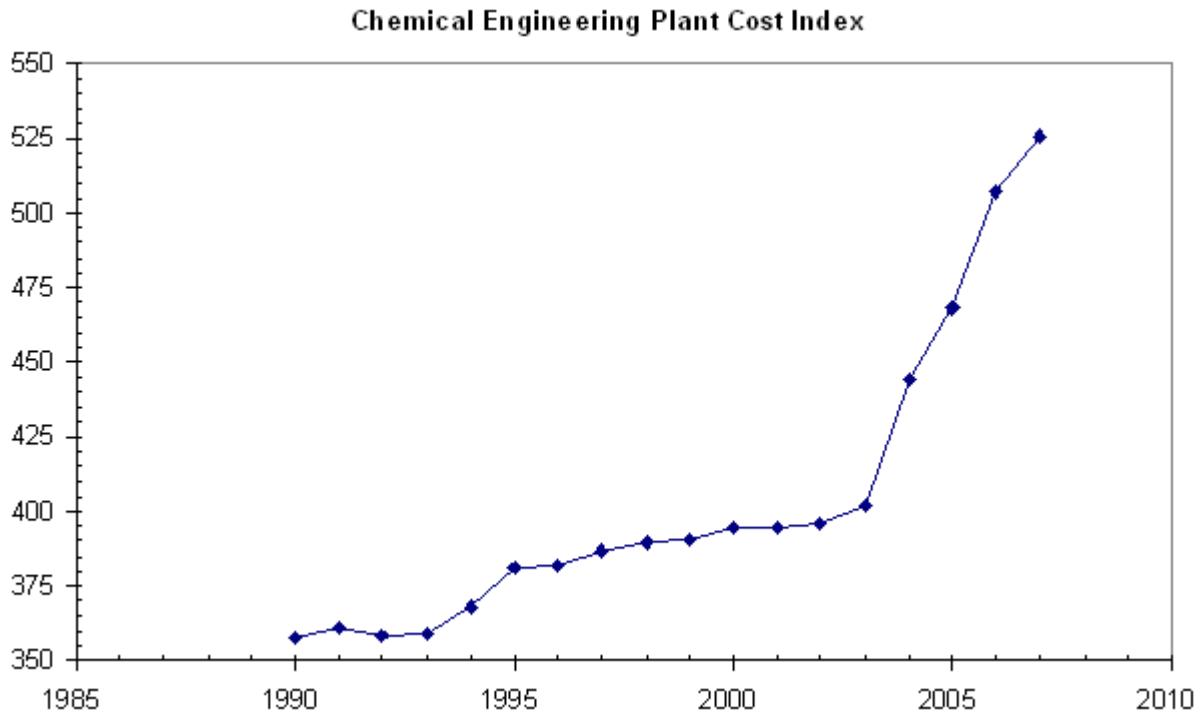

Figure 4. *Chemical Engineering* Magazine's Plant Cost Indices

Once the scaled, installed equipment costs were determined, overhead and contingency factors were applied to determine a total plant investment cost. That cost, along with the plant operating expenses (generally developed from the Aspen Plus model's mass and energy balance results), was used in a discounted cash flow analysis to determine the cost of ethanol production (referred to as the Minimum Ethanol Selling Price, or MESP) using a specific discount rate. For the analysis done here, the MESP is the primary value used to compare alternate designs.

1.2 Process Design Overview

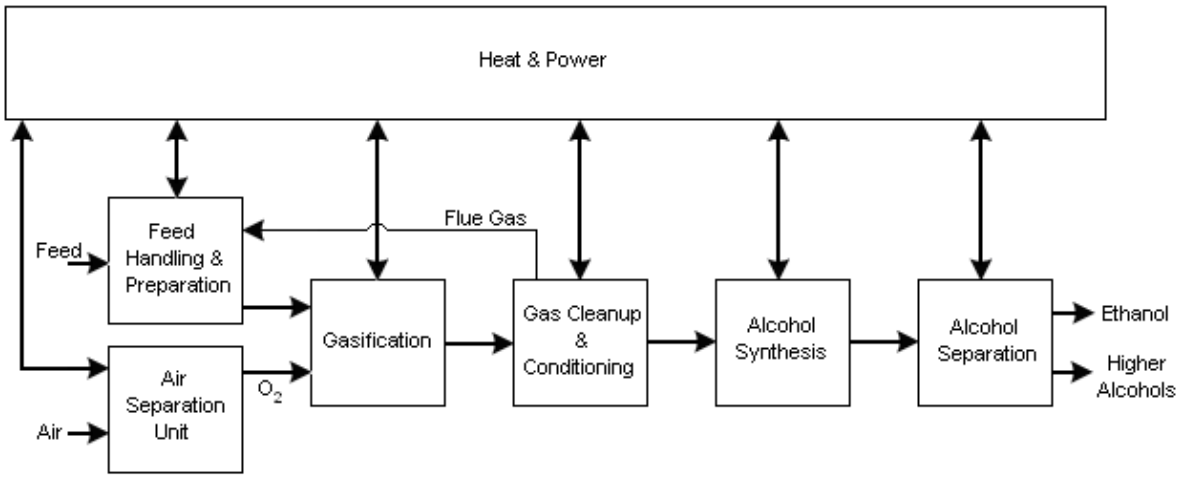

Figure 5. Block flow diagram

A simple block flow diagram of the current design is depicted in Figure 5. The detailed process flow diagrams (PFDs) are in Appendix F. The process has the following steps:

- *Feed Handling & Preparation.* The biomass feedstock is dried from the as-received moisture content to that required for proper feeding into the gasifier. Flue gases from the fuel combustor of the tar reformer are used for this purpose.
- *Air Separation Unit.* High pressure oxygen required by the gasifier is produced by the air separation unit. Air is liquefied by pressurizing and cooling it. Oxygen is separated as the liquid product of cryogenic distillation. The nitrogen produced is used for pressurizing lock hoppers in the biomass feed system. (Alternately, CO_2 from the amine system can be used for pressurizing the lock hoppers. Since both N_2 and CO_2 are available in the process the economics will not be altered. CO_2 is the preferable option if the feeding system allows excessive N_2 to leak into the gasifier).
- *Gasification.* An oxygen-blown direct gasifier developed by GTI (Gas Technology Institute, formerly IGT or Institute of Gas Technology) is used in this study.[24] Heat for the endothermic gasification reactions is supplied by combusting part of the biomass within the gasifier. Pressurized lock hoppers with screw conveyors are used to push the feed into the high pressure gasifier. The lock hoppers are pressurized using nitrogen from the air separation unit. Alternately, carbon dioxide from the acid gas removal system can be used to pressurize the hopper. Steam is injected at the bottom of the gasifier in order to fluidize the bed. Oxygen is introduced higher up in the bed, close to the biomass feed point. The three basic steps during direct gasification[24] are (a) Devolatilization - the instantaneous thermal decomposition of biomass to primarily produce H_2, CO_2, light hydrocarbons, and water; (b) Char Gasification - the gasification of biomass char with

steam in the presence of H_2 to produce CH_4, CO, H_2, and CO_2; and (c) Char Combustion - the combustion of residual biomass char, which supplies the energy required for endothermic char gasification. Two cyclones at the exit of the gasifier separate the char, olivine, and ash from the syngas. These solids are then depressurized and cooled; water is added to avoid dust before being sent for solid waste disposal. Syngas from the gasifier is sent for cleanup and conditioning.

- *Gas Cleanup & Conditioning.* This consists of multiple operations: reforming of tars and other hydrocarbons to CO and H_2; syngas cooling/quench; and acid gas (CO_2 and H_2S) removal with subsequent reduction of H_2S to sulfur. Tar reforming is envisioned to occur in an isothermal fluidized bed reactor; de-activated reforming catalyst is separated from the effluent syngas and regenerated on-line. The hot syngas is cooled through heat exchange with the steam cycle and with additional cooling via water scrubbing. The scrubber also removes impurities such as particulates and ammonia along with any residual tars. The excess scrubber water is sent off-site to a wastewater treatment facility. The cooled syngas enters an amine unit to remove the CO_2 and H_2S. The H_2S is reduced to elemental sulfur and stockpiled for disposal. The CO_2 is vented to the atmosphere in this design but can easily be sequestered when tested methods are available.
- *Alcohol Synthesis.* The cleaned and conditioned syngas is converted to alcohols in a fixed bed reactor. The mixture of alcohol and unconverted syngas is cooled through heat exchange with the steam cycle. The liquid alcohols are separated away by condensing them from the unconverted syngas. Though the unconverted syngas has the potential to be recycled back to the entrance of the alcohol synthesis reactor, no significant recycle is done in this process design. Instead it is recycled to the Gas Cleanup & Conditioning section, mostly as feed to the tar reformer.
- *Alcohol Separation.* The alcohol stream from the Alcohol Synthesis section is depressurized in preparation for dehydration and separation. Another rough separation is performed in a flash separator; the evolved syngas is recycled to the Gas Cleanup & Conditioning section, mostly as feed to the tar reformer. The depressurized alcohol stream is dehydrated using vapor-phase molecular sieves. The dehydrated alcohol stream is introduced to the main alcohol separation column that splits methanol and ethanol from the higher molecular weight alcohols. The overheads are topped in a second column to remove the methanol to ASTM sales specifications. The methanol leaving in the overheads is used to flush the adsorbed water from the molecular sieves. This methanol/water mixture is recycled back to the entrance of the alcohol synthesis reactor.
- *Heat & Power.* A conventional steam cycle produces heat (as steam) for the gasifier and reformer operations and electricity for internal power requirements (with the possibility of exporting excess electricity as a co-product). The steam cycle is integrated with the biomass conversion process. Pre-heaters, steam generators, and super-heaters are integrated within the process design to create the steam. The steam runs through turbines to drive compressors, to generate electricity, or to be withdrawn at various pressure levels for injection into the process. The condensate is sent back to the steam cycle, de-gassed, and combined with makeup water.

A cooling water system is also included in the Aspen Plus model to determine the requirements of the cooling water heat exchangers within the biomass conversion process as well as the requirements of the cooling tower.

Previous analyses of gasification processes have shown the importance of properly utilizing the heat from the high temperature streams. A pinch analysis was performed to design a heat exchanger network for this ethanol production process. The pinch concept offers a systematic approach to optimize the energy integration of the process. Details of the pinch analysis will be discussed in Section 2.11.

1.3 Feedstock and Plant Size

Based upon expected availability per the Billion Ton Vision[6] study, forest resources were chosen as the primary feedstock. The Billion Ton Vision study addressed short and long term availability issues for biomass feedstocks without giving specific time frames. The amounts are depicted in Figure 6. The upper sets of numbers (labeled "High Yield Growth with Energy Crops" and "High Yield Growth without Energy Crops") are projections of availability that will depend upon changes to agricultural practices and the creation of a new energy crop industry. In the target year of 2012 it is most probable that the amounts labeled "Existing & Unexploited Resources" will be the only ones that can be counted on to supply a thermochemical processing facility. Notice that the expected availability of forest resources is nearly the same as that of agricultural resources. Prior studies for biochemical processing have largely focused on using agricultural resources. It makes sense to base thermochemical processing on the forest resources. TC processing could fill an important need to provide a cost-effective technology to process this major portion of the expected biomass feedstock.

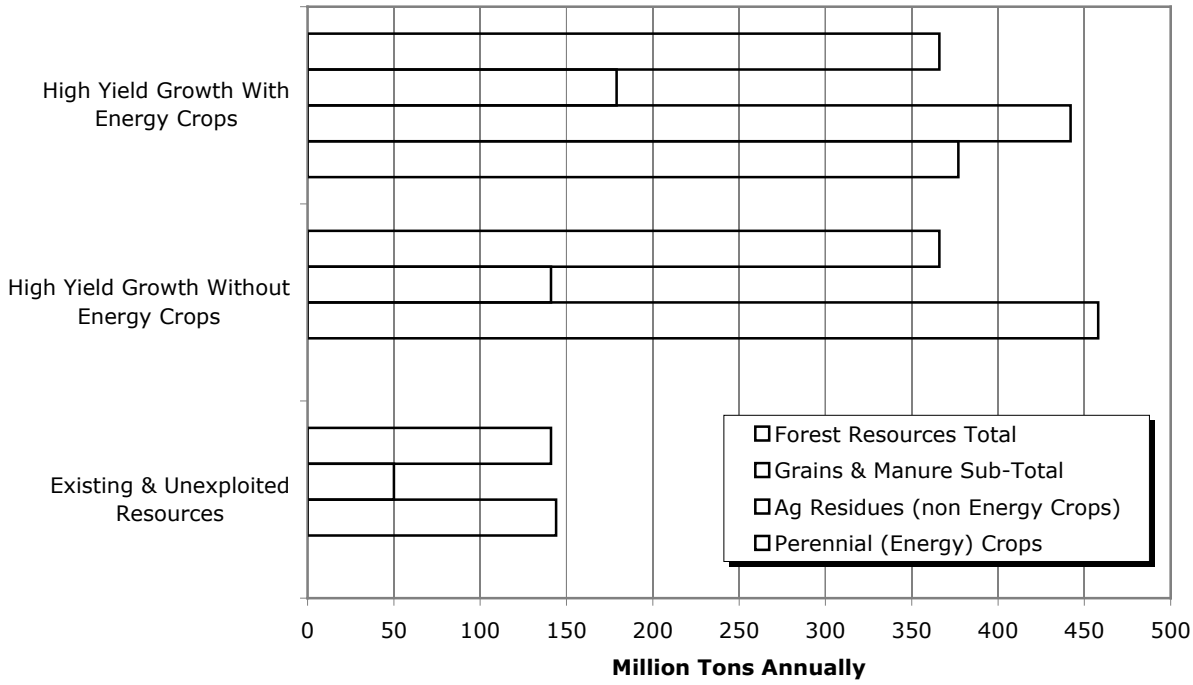

Figure 6. Expected availability of biomass

The indirect gasification design report[2] used hybrid poplar wood chips delivered at 50 wt% moisture to model forest resources; the same will be done here. The ultimate analysis for the feed used in this study is given in Table 2. Performance and cost effects due to composition and moisture content were examined as part of the sensitivity analysis and alternate scenarios.

Table 2. Ultimate Analysis of Hybrid Poplar Feed

Component (wt%, dry basis[25])	
Carbon	50.88
Hydrogen	6.04
Nitrogen	0.17
Sulfur	0.09
Oxygen	41.90
Ash	0.92
Heating value[a] (Btu/lb)	8,671 HHV[b] 8,060 LHV[c]

[a] Calculated using the Aspen Plus Boie correlation.
[b] Higher Heating Value
[c] Lower Heating Value

The design plant size of 2,000 dry metric tonnes per day was chosen to match that of the Aden et al. biochemical process[3] and the Phillips et al. indirect gasification process.[2] With an expected 8,406 operating hours per year (96% operating factor) the annual feedstock requirement is 700,000 dry metric tonnes per year. As can be seen in Figure 6, this is a small portion of the 140 million dry tons per year of forest resources potentially available. Cost effects due to plant size were examined as part of the sensitivity analysis.

The delivered feedstock cost was chosen to match the number used in the indirect gasifier report, which was $35/dry ton. The $35/dry ton in 2005 dollars was the 2012 target feedstock cost based on previous analyses done at the Idaho National Laboratory (INL).[26] The feedstock cost target for 2012 has since been revised (and will be published in an updated version of the Biomass Program's Multi-Year Program Plan[27]) to $50.70/dry ton (in 2007 dollars) and has been used to generate the updated results in Appendix I. Cost effects due to feedstock costs were also examined as part of the sensitivity analysis.

2 Process Design

2.1 Process Design Basis

The process design developed for this study is based upon the current operation and R&D performance goals for the catalytic tar destruction and heteroatom removal work at NREL and alcohol synthesis work at NREL and PNNL. This target design shows the effect of meeting these specific research and development (R&D) goals.

The process consists of the following major sections:

- Feed handling and drying
- Gasification
- Gas cleanup and conditioning
- Alcohol synthesis
- Alcohol separation
- Integrated steam system and power generation cycle
- Cooling water and other utilities
- Air separation unit.

2.2 Feed Handling and Drying – Area 100

This section of the process accommodates the delivery of biomass feedstock, short term on-site storage, and the preparation of the feedstock for processing in the gasifier. The design is based upon a woody feedstock. It is expected that a feed handling area for agricultural residues or energy crops would be very similar.

The feed handling and drying section is shown in PFD-P810-A101 and PFD-P810-A102. Wood chips are delivered to the plant primarily via trucks. However, it is envisioned that there could be some train transport. Assuming that each truck capacity is about 25 tons,[28] this means that if the

wood, at a moisture content of 50%, was delivered to the plant via truck transport only, then 176 truck deliveries per day would be required. As the trucks enter the plant they are weighed (M-101) and the wood chips are dumped into a storage pile. From the storage pile, the wood chips are conveyed (C-102) through a magnetic separator (S-101) and screened (S-102). Particles larger than 2 inches are sent through a hammer mill (T-102/M-102) for further size reduction. Front end loaders transfer the wood chips to the dryer feed bins (T-103).

Drying is accomplished by direct contact of the biomass feed with hot flue gas. Because of the large plant size there are two identical, parallel feed handling and drying trains. The wet wood chips enter each rotary biomass dryer (M-104) through a dryer feed screw conveyor (C-104). The wood is dried to a moisture content of 5 wt% with flue gas from the tar reformer's fuel combustor (R-303A). The exhaust gas exiting the dryer is sent through a cyclone (S-103) and baghouse filter (S-104) to remove particulates prior to being emitted to the atmosphere. The stack temperature of the flue gas is set at 62° above the dew point of the gas, 237°F (114°C). The stack temperature is controlled by cooling the hot flue gas from the tar reformer (H-311 in simulation, which physically translates to H-AP-1, H-AP-2, H-AP-3 and H-AP-4 after pinch analysis) prior to entering the dryer. This heat is used to preheat a tar reformer inlet stream (H-AP-1), superheat steam (H-AP-2), generate steam (H-AP-3), and heat boiler feed water (H-AP-4). The dried biomass is then pressurized with nitrogen available from the Air Separation Unit in a lock hopper (T-105) and conveyed to the gasifier train via a feed hopper (T-104) and a screw conveyor (C-105).

The cost of the feed handling system was averaged from various sources shown in Table 18.

2.3 Gasification – Area 200

This section of the process converts a mixture of dry feedstock, oxygen, and steam to syngas, char, and ash. Heat is provided by partial combustion of the biomass. The amount of oxygen supplied dictates the amount of biomass combusted. This is used to control the temperature of the gasifier.

From the feed handling and drying section, the dried wood enters the gasifier section as shown in PFD-P810-A201. Because of the plant size, it is assumed that there are two parallel gasifier trains. The gasifier (R-201) used in this analysis is a high-pressure oxygen blown bubbling fluidized bed gasifier. The gasifier was modeled using correlations based on data from the Gas Technology Institute (GTI) 12 tonne/day test facility[24] (see Appendix G).

The inert solid in the gasifier is synthetic olivine, a calcined magnesium silicate, primarily Enstatite ($MgSiO_3$), Forsterite (Mg_2SiO_3), and Hematite (Fe_2O_3), used as a heat transfer solid for various applications. A small amount of MgO must be added to the fresh olivine to avoid the formation of glass-like bed agglomerations that would result from the biomass potassium interacting with the silicate compounds. The MgO titrates the potassium in the feed ash. Without MgO addition, the potassium will form glass, K_2SiO_4, with the silica in the system. K_2SiO_4 has a low melting point (~930°F, 500°C), and its formation will cause the bed media to become sticky, agglomerate, and eventually defluidize. Adding MgO makes the potassium form a high melting point (~2,370°F, 1,300°C) ternary eutectic with the silica, thus sequestering it. Potassium carry-over in the gasifier/combustor cyclones is also significantly reduced. The ash content of the

feed is assumed to contain 0.2 wt% potassium. The MgO flow rate is set at two times the molar flow rate of potassium.

The gasifier fluidization medium is steam that is supplied from the steam cycle (Steam System and Power Generation – Area 600). The steam-to-feed ratio is 0.2 lb of steam per lb of dried biomass (the dried biomass has 5 wt% moisture). The gasifier pressure is 438 psia. Olivine is added at a rate of 1 wt% of the dry ash free biomass flow rate to make up for attrited and entrained olivine leaving the gasifier. The heat loss from the gasifier is set at 1% of the heating value of the feedstock.

The target temperature of the gasifier is set at 1600°F. Oxygen input is controlled to maintain this temperature. Oxygen feed was about 0.23 lb per lb of bone dry feed for a gasifier temperature of 1600°F. Adding more steam or increasing the target temperature increases the amount of combustion, which depletes the amount of syngas that can be used for alcohol synthesis. The composition of the outlet gas from the gasifier is shown in Table 3.

Particulate removal from the raw syngas exiting the gasifier is performed using two-stage cyclone separators. Nearly all of the olivine (99.9%) and char (99%) is separated in the primary gasifier cyclone (S-201). A secondary cyclone (S-202) removes 99% of any residual fines. The solids are depressurized and cooled. The olivine and char mixture from the two cyclones is landfilled, but prior to this the solids are cooled and water is added to the sand/ash stream for conditioning to prevent the mixture from being too dusty to handle. First the ash and sand mixture is cooled to 300°F (149°C) using the water cooled screw conveyor (M-201), then water is added directly to the mixture until the mixture water content is 10 wt%.

Table 3. Gasifier Operating Parameters, Gas Compositions, and Efficiencies

Gasifier Variable	Value	
Temperature	1,600ºF (871ºC)	
Pressure	438 psia (30.2 bar)	
Gasifier outlet gas composition	mol% (wet)	mol% (dry)
H_2	17.82	22.85
CO_2	29.02	37.21
CO	14.50	18.60
H_2O	22.01	--
CH_4	13.88	17.79
C_2H_6	0.66	0.84
C_6H_6	0.99	1.26
tar ($C_{10}H_8$)	0.32	0.41
NH_3	0.20	0.26
H_2S	0.04	0.06
N_2	0.03	0.03
Ar	0.53	0.68
H_2:CO molar ratio	1.23	
Gasifier Efficiency	79.7% HHV basis 78.2% LHV basis	

Capital costs for the equipment in this section along with sources are shown in Table 18. Note that the cost shown in Table 18 included the cost of the gasifier and the tar reformer for a 2,000

ton/day plant. The tar reformer is included in Area 300. In order to split the cost between the gasification section (A200) and the gas cleanup section (A300), the capital costs were split equally between two gasifier trains and a reformer. The capital cost estimate is approximate and was compiled for a previous study by Spath et al.[49] The operating costs for this section are listed in Appendix D and consist of makeup MgO and olivine and sand/ash/char removal.

2.4 Gas Cleanup and Conditioning – Area 300

This section of the process cleans up and conditions the syngas so that the gas can be synthesized into alcohol. The type and the extent of cleanup are dictated by the requirements of the synthesis catalyst:

- The tars in the syngas are reformed to additional CO and H_2
- Particulates are removed by quenching
- Acid gases (CO_2 and H_2S) are removed.

The gas from the secondary gasifier cyclone is sent to the catalytic tar reformer (R-303). In this bubbling fluidized bed reactor the hydrocarbons are converted to CO and H_2 while NH_3 is converted to N_2 and H_2. In the Aspen simulation, the conversion of each compound is set to match targets that are believed to be attainable through near-term research efforts. Table 4 gives the conversion targets for 2012 used in the 2007 indirect gasifier design report,[2] which assumes a pressure of 16 psi in the tar reformer.

Table 4. Target Design Performance of Tar Reformer in the Phillips et al. Report[2]

Compound	Target Conversion to CO & H_2 (2012)
Methane (CH_4)	80%
Ethane (C_2H_6)	99%
Ethylene (C_2H_4)	90%
Tars (C_{10+})	99.9%
Benzene (C_6H_6)	99%
Ammonia (NH_3)[a]	90%

However, the targets shown in Table 4 are not valid at the higher pressure of 431 psi used in this design because they exceed equilibrium conversions at that condition. The pressure of 431 psi was chosen because it was slightly lower than the gasifier exit pressure of 438 psi. Operating at these conditions saves on downstream compression costs. The conversions were modified to approach 80% of equilibrium for methane and 90% of equilibrium for ammonia (consistent with Table 4) at the reaction conditions shown in Table 6. The equilibrium compositions were calculated by Gibbs free energy minimization (RGIBBS) in Aspen Plus. The equilibrium for the other species in Table 4 was either not affected significantly by pressure or these species were not present in any significant quantities in the simulation to warrant changing their conversions.

[a] Converts to N_2 and H_2

The conversions used in this model are shown in Table 5.

Table 5. Conversions Used in the Tar Reformer

Compound	Target Conversion to CO & H_2
Methane (CH_4)	46.2%
Ethane (C_2H_6)	99%
Ethylene (C_2H_4)	90%
Tars (C_{10+})	99.9%
Benzene (C_6H_6)	99%
Ammonia (NH_3)[a]	78%

The impact of the lower methane conversion has far-reaching effects on the economics of the process. The higher methane at the inlet of the synthesis reactor results in a lower fraction of the throughput being converted to mixed alcohols. This increases the recycle of unconverted gases and the throughput through the tar reformer, increasing capital costs. Also, the H_2:CO ratio, which is required to be between 1 and 1.2 at the alcohols synthesis reactor inlet (in this design), is significantly higher and closer to 2 without any mitigation. This is because the steam input is based on the total carbon going into the tar reformer and not on the actual conversion, which means there is a higher amount of steam available for water gas shift; this shifts the equilibrium toward H_2 production. To mitigate the H_2:CO ratio, CO_2 is added to the tar reformer, which in turn further increases the volume of the reactor. A significant portion of the added CO_2 comes out unreacted from the tar reformer. To meet the CO_2 specification of 5% in the alcohol synthesis reactor, the amine system needs to expend greater energy and requires higher capital costs to remove the higher amounts of CO_2. While dry reforming with CO_2 is known to be used for lowering H_2:CO ratios,[29] it is not economical in this case. The economics of running the direct gasifier at a lower pressure of 100 psi are worse than for the base case of this report and are discussed in Appendix K.

In the Aspen simulation the tar reformer operates isothermally at 1,600ºF. An implicit assumption in this mode of operation is that the energy needed for the endothermic reforming reactions can be transferred into the catalyst bed. Although conceptual reactor designs are readily created for providing the heat of reaction from the fuel combustion area directly into the reformer catalyst bed, in practice this may be a difficult and prohibitively expensive design option requiring internal heat transfer tubes operating at high temperatures. An alternate approach, not used in this study, would be to preheat the process gas upstream of the reformer above the current reformer exit temperature and to operate the reformer adiabatically with a resulting temperature drop across the bed and a lower exit gas temperature. In this configuration, the required inlet and exit gas temperatures would be set by the extent of conversion, the kinetics of the reforming reactions, and the amount of catalyst in the reactor. The composition of the gas from the tar reformer can be seen in Table 6.

[a] Converts to N_2 and H_2

Table 6. Target Design Tar Reformer Conditions and Outlet Gas Composition

Tar Reformer Variable	Value	
Tar reformer inlet temperature	1,600ºF (871ºC)	
Tar reformer outlet temperature	1,600ºF (871ºC)	
Tar reformer pressure	431 psi	
Tar reformer outlet gas composition	mol% (wet)	mol% (dry)
H_2	31.16	39.72
CO_2	14.47	18.45
CO	25.99	33.14
H_2O	21.56	---
CH_4	4.66	5.94
C_2H_6	20.45 ppmv	26.07 ppmv
C_3H_8	0.06	0.08
N-C4H10	69.75 ppmv	88.92 ppmv
C5H12	8.47 ppmv	10.80 ppmv
C_6H_6	25.24 ppmv	32.17 ppmv
tar ($C_{10}H_8$)	0.82 ppmv	1.05 ppmv
NH_3	122.96 ppmv	156.76 ppmv
H_2S	142.59 ppmv	181.78 ppmv
Ar	1.70	2.17
N_2	0.35	0.45
H_2:CO molar ratio	1.2	

Prior to the quench step, the hot syngas is cooled to 320°F (160°C) with heat exchangers (H-301A in the simulation, which translates to physical exchangers H-AP-6, H-AP-8, H-AP-9, H-AP-10 after pinch analysis) that are integrated with various cold streams in the process that need to be heated. Details of the pinch analysis are shown in Appendix H, and the exchangers are also shown in the process flow diagrams in Appendix F. Additional cooling is carried out via water scrubbing, shown in PFD-P810-A305. The scrubber also removes impurities such as particulates, residual ammonia, and any residual tars. The scrubbing system consists of a venturi scrubber (M-302) and quench chamber (M-301). The scrubbing system quench water is a closed recirculation loop with heat rejected to the cooling tower and a blow down rate of approximately 5.9 gpm (2,963 lb/hr) that is sent to a wastewater treatment facility.

The quench water flow rate is determined by adjusting its circulation rate until the L/G (liquid by gas volumetric flows) ratio is 1 liter/m^3. This was based on a study of venturi scrubbers indicating that this results in near-optimal performance.[30] After further heat exchange with process streams (H-301D in the simulation, which translates to physical exchangers H-BP-1 through H-BP-16 after pinch analysis) and cooling water exchangers (H-301C and H-303), the syngas is cooled to 110°F (43°C). Any solids that settle out in T-301 are sent off-site for treatment as well. For modeling purposes, the water content of the sludge stream was set at 50 wt%. A significant amount of water is condensed in the knock-out drum S-301. This water is free of any significant particulates and heavy hydrocarbons because of prior scrubbing and is sent for reuse in the steam system after going through a water softener (M-601) and deaerator (T-603).

Depending on the specific catalysts being used downstream of the tar reformer, varying concentrations of acid gas compounds can be tolerated in the syngas. For example, sulfur concentrations (as H_2S) must be below 0.1 ppm for copper based synthesis catalysts. This design is based upon sulfided molybdenum catalysts, which actually require up to 100 ppm of H_2S in

the syngas to maintain catalyst activity. Because the syngas exiting the gasifier can be as high as 400 ppmv of H_2S (higher for agricultural residues like corn stover than for woody biomass), some level of sulfur removal will be required by any of the synthesis catalysts currently of interest.

Carbon dioxide is the other acid gas that needs to be removed in the syngas conditioning process. Similar to the sulfur compounds, the acceptable level of CO_2 depends on the specific catalyst being used in the synthesis reactor to make alcohols. Some synthesis catalysts require low levels of CO_2 while others, such as the sulfided molybdenum catalysts, can tolerate relatively high CO_2 levels. CO_2 is a major component of the gasification product, so significant amounts of CO_2 may need to be removed upstream of the synthesis reactor.

Since the catalyst selected for this study is a sulfided catalyst that is tolerant of sulfur up to 100 ppmv and CO_2 up to 7 mol% (see Appendix J of the Phillips et al. report[2] for more detail), a design that can provide for the removal of both sulfur and carbon dioxide was chosen. An amine system capable of selectively removing CO_2 and H_2S from the main process syngas stream is used. The amine assumed for this study is monoethanolamine (MEA), based on the recommendation by Nexant.[31]

The acid gas scrubber was simulated using a simplified model of SEP blocks and by specifying the amount of CO_2 and H_2S that needs to be removed to meet design specifications of 50 ppmv H_2S and 5 mol% CO_2 at the synthesis reactor inlet, including any recycle streams to that unit operation. The amine system heating and cooling duties were calculated using information taken from section 21 of the GPSA Data Handbook[32]. This method gave a heat duty of 2,364 Btu per pound of CO_2 removed, with a similar magnitude cooling duty provided by forced-air cooling fans. Power requirements for pumping and fans were also calculated using GPSA recommended values. The acid gas scrubber operating values for the base case are given in Table 7.

Table 7. Acid Gas Removal Design Parameters

Acid Gas Removal Parameter	Value
Amine Used	Monoethanolamine (MEA)
Amine Concentration	35 wt%
Amine Circ. Rate	3,910 gpm
Amine Temp. @ Absorber	110°F
Absorber Pressure	414 psia
Stripper Condenser Temperature	212°F
Stripper Reboiler Temperature	237°F
Stripper Pressure	65 psia
Stripper Reboiler Duty	281.5 MMBtu/hr
Stripper Condenser Duty	187.7 MMBtu/hr
Amine Cooler Duty	93.8 MMBtu/hr
Heat Duty per Pound CO_2 removed	2,364 Btu/lb

If a highly CO_2-tolerant alcohol synthesis catalyst is used, it may become possible to use other syngas conditioning processes or methods to selectively remove H_2S, with less energy and possibly at a significantly lower capital cost.

The acid gases removed in the amine scrubber are then stripped to regenerate the sorbent and sent through a sulfur removal operation using a liquid phase oxidation process as shown in PFD-P810-A308. The combined Amine/ LO-CAT® process will remove the sulfur and CO_2 to the levels desired for the selected moly-sulfide catalyst. Although there are several liquid-phase oxidation processes for H_2S removal and conversion available today, the LO-CAT process was selected because of its progress in minimizing catalyst degradation and its environmentally-benign catalyst. LO-CAT is an iron chelate-based process that consists of a venturi precontactor (M-303), liquid-filled absorber (M-304), air-blown oxidizer (R-304), air blower (K-302), solution circulation pump (P-303), and solution cooler (H-305). Elemental sulfur is produced in the oxidizer and since only a small amount (1.6 ton/day) is produced, it is stockpiled either for eventual disposal or sold as an unconditioned product. The LO-CAT process was modeled to remove the H_2S to a concentration of 10 ppmv in the CO_2 vent effluent from the amine scrubber. The air flow rate for re-oxidizing the LO-CAT solution was included in the simulation and calculated based on the requirement of 2 moles of O_2 per mole of H_2S. Prior to entering the LO-CAT system the gas stream is superheated by 10°F (5.6°C) in a preheater (H-304). The dewpoint of this stream is about 120˚F, and this degree of superheating is required for the LO-CAT system. The CO_2 from the LO-CAT unit is vented to the atmosphere.

The capital costs for the equipment in this section are described in further detail in Appendix C. The operating costs consist of makeup reforming catalyst, LO-CAT and amine chemical makeup, as well as reforming catalyst disposal cost and wastewater treatment. These are described in further detail in Section 3.

2.5 Alcohol Synthesis – Area 400

The alcohol synthesis reactor system is the heart of the entire process. Entering this process area, the syngas has been reformed, quenched, compressed, and treated to have reduced acid gas concentrations (H_2S, CO_2). After that, it is further compressed and heated to the synthesis reaction conditions of about 1,000 psia and 570°F (300°C). The syngas reacts to form an alcohol mixture across a fixed bed catalyst. The product gas is subsequently cooled, allowing the alcohols to condense and separate from the unconverted syngas. The liquid alcohols are then sent to alcohol separation and purification (Area 500). The residual gas stream is recycled back to the tar reformer with a small purge to fuel combustion (8%).

Research on alcohol synthesis catalysts has waxed and waned over many decades for a variety of reasons. In order to review the status of mixed alcohol technology and how it has developed over the past 20 years, two activities were initiated. First, a literature search was conducted. This search and its findings are described in more detail in Appendix J of the Phillips et al. report,[2] along with a discussion on specific terminology such as “yield,” “selectivity,” and “conversion.” These terms will be used throughout the remainder of this document. Second, an engineering consulting company (Nexant) was hired to document the current state of technology with regard to mixed alcohols production and higher alcohol synthesis. Their results are published in an NREL subcontract report.[33]

Based on the results of this background technology evaluation, a modified Fischer-Tropsch catalyst was used for this process design; specifically, a molybdenum-disulfide-based (MoS_2) catalyst. The former Dow/UCC catalyst was chosen because of its relatively high ethanol selectivity and because its product slate is a mixture of linear alcohols (as opposed to the

branched alcohols that result from modified methanol catalysts). This particular catalyst uses high surface area MoS_2 promoted with alkali metal salts (e.g., potassium carbonate) and cobalt (CoS). These promoters shift the product slate from hydrocarbons to alcohols, and they can either be supported on alumina or activated carbon or be used unsupported.

Table 8 lists several process and syngas conditioning requirements for this synthesis reaction. These include experimentally verified conditions typical of those found in literature as well as targeted conditions from the OBP-funded research plan used in the model.

Table 8. Process Conditions for Mixed Alcohols Synthesis

Parameter	"State of Technology" Conditions	Target Conditions Used in Process Design & Aspen Model
Temperature (°C)	~ 300	300
Pressure (psia)	1,500 – 2,000	1,000
H_2/CO ratio	1.0 – 1.2	1.2
CO_2 concentration (mol%)	0% - 7%	5.0%
Sulfur concentration (ppmv)	50 – 100	50

Though the synthesis reactor is modeled as operating isothermally, it is recognized that maintaining a constant temperature in a fixed bed reactor system would be difficult, especially since these reactions are highly exothermic. Temperature has a significant impact on the alcohol selectivity and product distribution. High pressures are typically required to ensure the production of alcohols. MoS_2 catalysts are efficient Fischer-Tropsch (FT) catalysts at ambient or low pressures. However, significantly raising the pressure (in addition to promoting with alkali) helps to shift the kinetic pathways from hydrocarbon production toward alcohol production. However, compression requirements for achieving these pressures can be quite substantial. Thus, targeting a catalyst that achieves optimal performance at lower pressures can potentially provide significant cost savings.

The CO_2 concentration requirements for the syngas are less well-known. Herman[34] states that in the first Dow patent application, the presence of larger amounts of CO_2 in the synthesis gas retarded the catalyst activity. Further study showed that increasing the CO_2 concentration to 30 vol% decreased the CO conversion but did not significantly alter the alcohol:hydrocarbon ratio of the product. With CO_2 concentrations up to 6.7 vol%, the extent of CO conversion is not affected; however, higher chain alcohol yield relative to methanol does tend to decrease. This is why CO_2 concentrations were reduced to 5 mol% in the model using the amine system as part of syngas conditioning. The effect of CO_2 concentration on alcohol production will be studied in future laboratory experiments.

One of the benefits of this catalyst is its sulfur tolerance. It must be continuously sulfided to maintain its activity; thus an inlet gas concentration of 50 ppmv H_2S is maintained. Concentrations above 100 ppmv inhibit both the reaction rate and higher alcohol selectivity.

The overall stoichiometric reaction for alcohol synthesis can be summarized as:

$$n\ CO + 2n\ H_2 \rightarrow C_nH_{2n+1}OH + (n\text{-}1)\ H_2O$$

Stoichiometry suggests an optimum H_2:CO ratio of 2.0. However, this catalyst maintains significant water-gas shift activity and will generate its own H_2 from CO and H_2O:

$$CO + H_2O \rightarrow H_2 + CO_2$$

This shifts the optimal ratio closer to 1.0 and also shifts the primary byproduct from water to CO_2. Experiments have been typically conducted using ratios in the range of 1.0 to 1.2.

The compressor (K-410) in this area is a 3-stage steam-driven compressor that takes the syngas from 414 psia to 1,000 psia, requiring 9,167 HP (assuming a polytropic efficiency of 78%). The outlet syngas from the compressor is then mixed with recycled methanol from Alcohol Purification (Area 500), heated to 570°F (300°C), and sent to the reactor. The capital cost for the compressor was developed using Questimate.

The mixed alcohol synthesis reactor is a fixed-bed reactor system that contains the MoS_2 catalyst. Because this is a net exothermic reaction system, water is cross exchanged with the reactor to produce steam for the process while helping to maintain a constant reactor temperature. Questimate was used to develop the reactor capital cost.

The purchase price of the catalyst itself was estimated at $5.25/lb based on conversations NREL researchers had with CRITERION, a petroleum/hydrocarbon catalyst provider. This represents a generalized cost of molybdenum-based catalyst at around $5/lb being sulfided for an additional $0.25/lb. In addition, NREL was able to speak with Dow catalyst experts[35] who said that in today's market, the raw material costs for producing such a catalyst system would run about $20/lb. Adding more cost for the catalyst preparation would bring that cost to $22-$40/lb. However, these costs could go down as demand goes up, and could decrease quite substantially at a large enough scale.

In reality, each company developing a process like this will have its own proprietary catalyst and associated formulation. The costs for these catalysts are difficult to predict at the present time since so few providers of mixed alcohols catalyst currently exist (and costs will likely be negotiated with individual providers). Nexant also provided information on general catalyst price ranges in their report. They reported molybdenum ranging from $2-$40/lb.

The lifetime of the catalyst was assumed to be 5 years. While existing mixed alcohols catalysts have not been tested for this long, they have operated for more than 8,000 hours (roughly 1 year of continuous operating time) with little or no loss in performance.

The reactor was modeled as a simple conversion-specified reactor using a series of alcohol and hydrocarbon production reactions as shown in Table 9. The propane, butane, and pentane+ reactions are set to zero because the catalyst will likely not favor these reactions. The specific conversions of each of the other reactions were set in order to reach catalyst performance targets. Those targets are shown in Table 10 along with values for those parameters typically found in literature.

Table 9. System of Reactions for Mixed Alcohol Synthesis

Water-Gas Shift	$CO + H_2O \leftrightarrow H_2 + CO_2$
Methanol	$CO + 2H_2 \rightarrow CH_3OH$
Methane	$CH_3OH + H_2 \rightarrow CH_4 + H_2O$
Ethanol	$CO + 2H_2 + CH_3OH \rightarrow C_2H_5OH + H_2O$
Ethane	$C_2H_5OH + H_2 \rightarrow C_2H_6 + H_2O$
Propanol	$CO + 2H_2 + C_2H_5OH \rightarrow C_3H_7OH + H_2O$
Propane	$C_3H_7OH + H_2 \rightarrow C_3H_8 + H_2O$
n-Butanol	$CO + 2H_2 + C_3H_7OH \rightarrow C_4H_9OH + H_2O$
Butane	$C_4H_9OH + H_2 \rightarrow C_4H_{10} + H_2O$
Pentanol+	$CO + 2H_2 + C_4H_9OH \rightarrow C_5H_{11}OH + H_2O$
Pentane+	$C_5H_{11}OH + H_2 \rightarrow C_5H_{12} + H_2O$

Table 10. Mixed Alcohol Reaction Performance Results

Result	"State of Technology" Value Ranges[34, 36]	Target Results Used in Process Design & Aspen Model
Total CO Conversion (per-pass)	10% - 40%	60%
Total Alcohol Selectivity (CO_2-free basis)	70% - 80%	90%
Gas Hourly Space Velocity (hr^{-1})	1,600 – 12,000	4,000
Catalyst Alcohol Productivity (g/kg-catalyst/hr)[a]	150 – 350	600

The individual target values are less important than the net result of the entire collection. For example, a catalyst system can have a high CO conversion well above 40%, but if most of that CO is converted to methane or CO_2, then the alcohol selectivities would be very low and the entire process economics would suffer. Likewise, if the catalyst had a high CO conversion and selectivity but had very low productivity, a much larger reactor would have to be built to accommodate the volume of catalyst required. The set of targets shown above are improvements over current literature values, but they were chosen as targets believed to be achievable through catalyst research and development. There is precedent for these results from other catalyst systems. For example, FT catalysts are currently capable of CO conversions above 70%.[37] Also, commercial methanol catalysts have productivities over 1000 g/kg-catalyst/hr.[34]

The reaction conversions were also set to achieve a certain product distribution of alcohols. The mixed alcohol products described in literature are often high in methanol, but contain a wide distribution of several different alcohols. The product distributions described by Dow and SRI are shown in Table 11 along with the relative product concentrations calculated by the model.

[a] Based on assumed catalyst density of 64 lb/ft^3, 600 g/kg-catalyst/hr = 615 g/L-catalyst/hr.

Table 11. Mixed Alcohol Synthesis Product Distributions

Alcohol	Dow[38] (wt %)	SRI [39] (wt%)	NREL Model (wt%)[a]
Methanol	30-70%	30.77%	4.83%
Ethanol	34.5%	46.12%	67.13%
Propanol	7.7%	13.3%	9.48%
Butanol	1.4%	4.14%	1.17%
Pentanol +	1.5%	2.04%	0.15%
Acetates (C1 & C2)	2.5%	3.63%	
Others (CH4, C2H6, C3H8, C4H10,C5+)			14.58%
Water	2.4%		2.66%
Total	100%	100%	100%

The most significant differences between the NREL model product distribution and those shown in literature are with regard to the methanol and ethanol distributions. This is primarily due to the almost complete recycle of methanol within this process. In the alcohol purification section downstream, virtually all methanol is recovered via distillation and recycled back to mix with the compressed syngas. This is done in order to increase the production of ethanol and higher alcohols. While this concept has been proposed in literature, it has never been tested or quantified in an integrated setting. In literature, experiments are often conducted on closed or batch systems and do not examine the potential impacts of recycled compounds or other integration issues. Therefore it becomes difficult to predict what impact this might have on catalyst performance.

A kinetic model was used to guide these conversion assumptions to help predict how the catalyst may perform as a result of significant methanol recycle. Very few kinetic models have been developed for this catalyst system.[40,41,42] Of these, only Gunturu examined the possibility of methanol recycle. Therefore NREL reproduced this kinetic model using Polymath software. This kinetic model predicted that methanol entering the reactor would largely be converted to ethanol and methane. This model also predicted that maintaining high partial pressures of methanol in the reactor would further reduce the production of alcohols higher than ethanol. More detailed discussion on the kinetic model can be found in Appendix K of the Phillips et al. report.[2]

After the reactor, the effluent is cooled to 110°F (43°C) through a series of heat exchangers while maintaining high pressure. First, the reacted syngas is cross exchanged with cooler process streams, lowering the temperature to 275°F (135°C). Air-cooled exchangers then bring the temperature down to 140°F (60°C). The temperature at the inlet of the air-cooled exchanger was determined by the heat rejection requirements of the process based on pinch analysis. The final 30°F (17°C) drop is provided by heat exchange with cooling water. A knock-out drum (S-501) is then used to separate the liquids (primarily alcohols) from the remaining gas, which is composed of unconverted syngas, CO_2, and methane. Aspen Plus contains other physical property packages that model non-ideal liquid systems much better than the Redlich-Kwong-Soave (RKS) equation of state used throughout the model. Therefore, the Non-Random Two-Liquid (NRTL) package was used to model the alcohol condensation.

[a] Prior to alcohol purification and methanol recycle

From here, the liquid crude alcohols are sent to product purification while the residual syngas is superheated to 1,500°F (816°C) and sent through an expander to generate additional power for the process. The pressure is dropped from 967 to 465 psia prior to being recycled to the tar reformer. An 8% purge stream is sent to fuel combustion.

Alternate configurations will be discussed later in this report, as will the economic sensitivity of certain synthesis parameters. One particular variation would be to recycle the unconverted syngas to the throat of the synthesis reactor instead of to the tar reformer. This would save money on upstream equipment costs because of lower process throughput, but it would also lower yields because the CO_2 would build up in the recycle loop. In the base case of this design report there is very little scope for extra recycle because the H_2:CO ratio is already close to 1.2.

Future experiments and analysis will examine the impacts of methanol recycle and of variations in concentration of CO_2, CH_4, and other compounds. Alternate reactor designs will also be examined. For example, FT technology has largely switched to slurry reactors instead of fixed-bed reactors because the slurry fluidization achieves better heat and mass transfer properties that allow, in turn, for higher conversions. Such improvements could help to achieve the conversion targets outlined above and reduce the costs of major equipment items.

2.6 Alcohol Separation – Area 500

The mixed alcohol stream from Area 400 is sent to Area 500 where it is de-gassed, dried, and separated into three streams: methanol, ethanol, and mixed higher-molecular weight alcohols. The methanol stream is used to back-flush the molecular sieve drying column and then recycled, along with the water removed during back flushing, to the inlet of the alcohol synthesis reactor in Area 400. The ethanol and mixed alcohol streams are cooled and sent to product storage tanks.

Carbon dioxide is readily absorbed in alcohol. Although the majority of the non-condensable gases leaving the synthesis reactor are removed in the separator vessel, S-501, a significant quantity of these gases remains in the alcohol stream, especially at the high system pressure. These gases are removed by depressurizing from 970 to 60 psia. Most of the dissolved gases separate from the alcohols in the knock-out vessel S-502. This gas stream is made up primarily of carbon dioxide with some small amounts of hydrocarbons and alcohols; it is recycled to the tar reformer in Area 300. After being vaporized (H-BP-16, H-BP-2) and superheated (H-BP-3) by 20°F (11°C) by cross exchanging with tar reformer exhaust streams, the alcohol stream goes to the molecular sieve dehydrator unit operation.

The molecular sieve dehydrator design was based upon previous biochemical ethanol studies[5,3] and assumed to have similar performance with mixed alcohols. In the biochemical ethanol cases, the molecular sieve is used to dry ethanol after it is distilled to the azeotropic concentration of ethanol and water (92.5 wt% ethanol). The adsorbed water is flushed from the molecular sieves with a portion of the dried ethanol and recycled to the rectification column. The water ultimately leaves out the bottom of the distillation column. In this thermochemical process, however, it was determined that drying the entire mixed alcohol stream before any other separation would be preferable. The adsorbed water is desorbed from the molecular sieves by a combination of depressurization and flushing with methanol. This methanol/water mixture is then recycled back to the Alcohol Synthesis section (A400).

The molecular sieve units require a superheated vapor. The liquid mixed alcohol stream is vaporized, superheated, and then fed to one of two parallel adsorption columns. The adsorption column preferentially removes water and a small amount of the alcohols. While one adsorption bed is adsorbing water, the other is regenerating. The water is desorbed from the bed during regeneration by applying a vacuum and flushing with dry methanol from D-505. This methanol/water mixture is recycled back to the Alcohol Synthesis section (A400). This methanol/water mixture is cooled to 140°F (60°C) using a forced air heat exchanger and separated from any uncondensed vapor. The gaseous stream is recycled to the tar reformer, and the condensate is pumped to 1,000 psia in P-514 and mixed with high-pressure syngas from compressor K-410 in Area 400 upstream of the synthesis reactor pre-heater.

The dry mixed alcohol stream leaving the molecular sieve dehydrator enters into the first of two distillation columns, D-504. D-504 is a typical distillation column using trays, an overhead condenser, and a reboiler. The methanol and ethanol are separated from the incoming stream with 99% of the incoming ethanol being recovered in the overhead stream along with essentially all incoming methanol. The D-504 bottom stream consists of 99% of the incoming propanol, 1% of the incoming ethanol, and all of the butanol and pentanol. The mixed alcohol bottom stream is considered a co-product of the plant and is cooled and sent to storage. The methanol/ethanol overhead stream from D-504 goes to a second distillation column, D-505, for further processing.

D-505 separates the methanol from the binary methyl/ethyl alcohol mixture. The ethanol recovery in D-505 is 99% of the incoming ethanol and has a maximum methanol concentration of 0.5 mole percent to meet product specifications for fuel ethanol. The ethanol, which exits from the bottom of D-505, is cooled before being sent to product storage. The methanol and a small quantity of ethanol exiting the overhead of column D-505 are used to flush the molecular sieve column during its regeneration step as explained above. The entire amount of methanol from D-505 is recycled through the molecular sieve dehydrator and then to the synthesis reactor in Area 400.

2.7 Steam System and Power Generation – Area 600

This process design includes a steam cycle that produces steam by recovering heat from the hot process streams throughout the plant. Steam demands for the process include the gasifier, reformer, amine system reboiler, alcohol purification reboilers, and LO-CAT preheater. Of these, only the steam to the gasifier and reformer is directly injected into the process; the rest of the plant heat demands are provided by indirect heat exchange of process streams with the steam and have condensate return loops. Power for internal plant loads is produced from the steam cycle using an extraction steam turbine/generator (M-602). Power is also produced from the process expander (K-412), which takes the unconverted syngas from 967 psia to 465 psia before it is recycled to the tar reformer.

The pressure for the high pressure steam is about 865 psia and is determined by the temperature requirement of the alcohol synthesis reactor. The synthesis reactor needs to be maintained at 570°F by generating steam. At 865 psia, water boils at roughly 527°F, and the generated steam should be appropriate for maintaining the reactor at 570°F. Steam is supplied to the gasifier and the reformer from the medium pressure (490 psia) turbine exhaust stage. The steam extraction pressure is determined by the process conditions of the gasifier and reformer. Low pressure steam (65 psia) is used for indirect heat exchange, and the choice is determined by the

requirement to maintain a reasonable temperature differential for heat exchange. The plant energy balance is managed to generate a minimum amount of excess electricity beyond the requirements of the plant. However, in order to meet the steam requirements of the process, some excess electricity is generated in the extraction steam turbine system. The excess electricity comes at the cost of lower production of mixed alcohols. The steam system and power generation area is shown in PFD-P810-A601, PFD-P810-A602, and PFD-P810-A603 in Appendix F.

A condensate collection tank (T-601) gathers condensate from the syngas cooling and from the process reboilers along with the steam turbine condensate and makeup water. The total condensate stream is heated to the saturation temperature and sent to the deaerator (T-603) to remove dissolved gases from the water. The water from the deaerator is first pumped to a pressure of 930 psia and then pre-heated to its saturation (bubble point) temperature using a series of exchangers. Steam is generated by exchanging heat with the alcohol synthesis reactor (R-410), by cooling the fuel combustor flue gases (H-AP-3), and by cooling part of the reformer exhaust (H-AP-6). The saturated steam is collected in the steam drum (T-604). To prevent solids build up, water must be periodically discharged from the steam drum. The blowdown rate is equal to 2% of the water circulation rate. The saturated steam from the steam drum is superheated with another series of exchangers. Superheated steam enters the turbine at 900ºF and 850 psia and is expanded to a pressure of 490 psia. The remaining steam then enters the low pressure turbine and is expanded to a pressure of 65 psia. Finally, the steam enters a condensing turbine and is expanded to a pressure of 1.5 psia. The steam is condensed in the steam turbine condenser (H-601) and the condensate is re-circulated back to the condensate collection tank.

The integration of the heat exchangers can be seen in the PFDs and in a discussion of the pinch analysis included in Appendices F and H, respectively. To close the heat balance of the system, the Aspen Plus model increases or decreases the water flow rate through the steam cycle until the heat balance of the system is met.

This process design assumes that the five compressors in this process (K-384, K410, K-801, K-802, K-802N) are steam-driven. All other drives for pumps, fans, etc. are electric motors. Additionally, an allowance of 10% of excess power is made to the total power requirement to account for miscellaneous usage and general electric needs (lights, computers, etc). Table 12 contains the power requirement of the plant broken out into the different plant sections. Because some compressors, including the one for the air separation unit, are steam driven and do not require electricity, the total power requirement is much less than it would be if all compression demands were included.

Table 12. Plant Power Requirements

Plant Section	Power Requirement (kW)
Feed Handling & Drying	742
Gasification	123
Tar Reforming, Cleanup, & Conditioning	3,862
Mixed Alcohol Synthesis	147
Alcohol Separation and Purification	203
Steam System & Power Generation	521 required 10,994 generated
Cooling Water & Other Utilities	199
Air Separation Unit	690
Miscellaneous	649
Total plant power requirement	7,136

2.8 Cooling Water and Other Utilities – Area 700

The cooling water system is shown on PFD-P810-A701. A mechanical draft cooling tower (M-701) provides cooling water to several heat exchangers in the plant. The tower utilizes large fans to force air through circulated water. Heat is transferred from the water to the surrounding air by the transfer of sensible and latent heat. Cooling water is used in the following pieces of equipment:

- The sand/ash cooler (M-201), which cools the char/sand/ash mixture from the gasifier
- The quench water recirculation cooler (H-301), which cools the water used in the syngas quench step
- Water-cooled aftercoolers (H-301C-1, H-303) for cooling the syngas prior to acid gas removal
- The LO-CAT® absorbent solution cooler (H-305), which cools the regenerated solution that circulates between the oxidizer and absorber vessels
- Wastewater cooler (H-306) for cooling water prior to discharge to the wastewater system
- The post alcohol synthesis cooler (H-414-1), which cools the gas in order to condense out the liquid alcohols
- The end product finishing coolers (H-591-1, H-593-1) for both the higher alcohols co-product and the primary ethanol product
- The steam turbine condenser (H-601), which condenses the steam exiting the steam turbine
- The blowdown water-cooled cooler (H-603), which cools the blowdown from the steam drum.

Makeup water for the cooling tower is supplied at 14.7 psia and 60°F (16°C). Water losses include evaporation, drift (water entrained in the cooling tower exhaust air), and tower basin blowdown. Drift losses were estimated to be 0.2% of the water going into the cooling tower. Evaporation losses and blowdown were calculated based on information and equations in Perry et al.[22] The cooling water returns to the process at a supply pressure of 65 psia and temperature is 90°F (32°C). The cooling water return temperature after process heat exchange is 110°F (43°C).

An instrument air system is included to provide compressed air for both service and instruments. The instrument air system is shown on PFD-P810-A701. The system consists of an air compressor (K-701), dryer (S-701), and receiver (T-701). The instrument air is delivered at a pressure of 115 psia, a moisture dew point of -40°F (-40°C), and is oil free.

Other miscellaneous items that are taken into account in the design include:

- A firewater storage tank (T-702) and pump (P-702)
- A diesel tank (T-703) and pump (P-703) to fuel the front loaders
- An ammonia storage tank (T-704) and pump (P-704)
- An olivine truck scale with dump (M-702) and an olivine lock hopper (T-705) as well as an MgO lock hopper (T-706)
- A hydrazine storage tank (T-707) and pump (P-705) for oxygen scavenging in the cooling water.

These equipment items are shown on PFD-P810-A702.

2.9 Air Separation Unit – Area 800

The air separation unit consists of a compressor and distillation columns for the cryogenic distillation of air to produce oxygen and nitrogen. This technology is mature and commercially available and was not modeled in detail in Aspen Plus. Capital costs for such units are available in literature.[43] It is also known that the inlet air compressor is the main energy user in the unit. It uses up to 95% of the utility costs, according to one source.[44] It has been reported[45] that a cryogenic air separation system consumes about 260 to 340 kWh of energy per long ton (1,016 kg) of O_2 produced, with about 90% of the energy used by the main compressor. In this study it is assumed that the air compressor uses 90% of the energy of the air separation unit. The base case uses about 6,900 kWh (10% of it as electricity and 90% for steam driven compressor) to produce 42,281 lb of O_2, which is roughly 365 kWh per long ton (1,016 kg), slightly more than the 260 to 340 kWh mentioned above.

Air is compressed to 132 psia. The compressor is modeled using an MCOMPR block in Aspen Plus with a polytropic efficiency of 78%. Steam generated in other parts of the process is used to drive the compressor. The total operating costs are inferred based on the assumption that the compressor uses 90% of the utility costs for the unit. A possible configuration of an air separation unit using a Linde Double-Column is shown in PFD-P810-A801. These units are typically installed and operated by companies specializing in air separation.

Although the most common process for oxygen production is used in this design, other options can be explored in the future.[46]

2.10 Additional Design Information

Table 13 contains some additional information used in the Aspen Plus model and production design.

Table 13. Utility and Miscellaneous Design Information

Item	Design Information
Ambient air conditions[a,b,c]	Pressure: 14.7 psia $T_{Dry\ Bulb}$: 90°F $T_{Wet\ Bulb}$: 80°F Composition (mol%): N_2: 75.7% O_2: 20.3% Ar: 0.9% CO_2: 0.03% H_2O: 3.1%
Pressure drop allowance	Syngas compressor intercoolers = 2 psi Heat exchangers and packed beds = 5 psi

2.11 Pinch Analysis

A pinch analysis was performed for the base case process. Details of the results from the analysis are shown in Appendix H. Pinch analysis allows the selection of a network of exchangers so that heat can be exchanged optimally within the process. Process streams that need to be heated and streams that need to be cooled are matched to minimize external utility requirements. The minimum approach temperature was set at 16.8°F. The upper and lower pinch temperatures were 314.8°F and 298°F, respectively.

There can be various designs for the heat exchanger network based on design objectives. One particular design was used for this study. The network designs above and below the pinch for the base case process are shown in Appendix H. All the exchangers above the pinch are named as H-AP-*n*, and those below the pinch are named H-BP-*n*, *n* being numbers assigned to exchangers according to their positions in the sequence. The capital costs for the heat exchangers were estimated using Aspen Icarus Process Evaluator.

It must be noted that the additional cases run for sensitivity analysis were not analyzed separately. The overall hot and cold duties were balanced. However, capital costs and the heat exchanger network were assumed to remain the same. It is to be noted that the costs of the heat exchangers were estimated individually using actual LMTDs and assumed heat transfer coefficients. The equipment cost after pinch analysis was about $5.2MM compared with $1.25MM in the indirect gasification process (both in 2005 dollars). Some of this may be

[a] In the GPSA Engineering Data Book[47], see Table 11.4 for typical design values for dry bulb and wet bulb temperature by geography. Selected values would cover summertime conditions for most of the lower 48 states.
[b] In Weast[48], see F-172 for composition of dry air. Nitrogen value adjusted slightly to force mole fraction closure using only N_2, O_2, Ar, and CO_2 as air components.
[c] In Perry et al.,[22] see psychrometric chart, Figure 12-2, for moisture content of air.

attributed to higher pressures and lower LMTDs in some parts of the oxygen blown direct gasification process, although some of the additional cost may be a result of the more detailed approach to the costing for this report. These capital equipment cost variations lead to variations up to about 2 cents/gallon in the calculated MESP, which is not very significant.

2.12 Energy Balance

Energy integration is extremely important to the overall economics and efficiency of this process. Therefore a detailed understanding of how and where the energy is utilized and recovered is required. Detailed energy balances around the major process areas were derived using data from the Aspen Plus simulation. Comparing the process energy inputs and outputs enables the energy efficiency of the process to be quantified. Also, tracing energy transfer between process areas makes it possible to identify areas of potential improvement to the energy efficiency.

The philosophy of defining the "energy potential" of a stream is the same as described in the indirect gasifier report and is based on the lower heating value of each component.[2]

The total energy potential for a stream has other contributions beyond that of the heating value. Other energy contributions are:

- Sensible heat effect – the stream is at a temperature (and pressure) different from that of the standard conditions at which the heating values are defined
- Latent heat effect – one or more components in the stream are in a different phase from that at which their heating values are defined
- Non-ideal mixing effect – any heating or cooling due to blending dissimilar components in a mixture.

The procedure for calculating the energy potential of a stream is the same as used in the indirect gasifier report.[2] The enthalpy values reported by Aspen Plus can be adjusted in a fairly simple manner to reflect either an HHV or LHV basis for the energy potential. The enthalpies calculated and reported by Aspen Plus are actually based upon a heat of formation for the energy potential of a stream. So, the reported enthalpies already include the sensible, latent, and non-ideal mixing effects. The reported enthalpy values were adjusted as part of a spreadsheet calculation. The factors used to adjust the reported enthalpies were calculated from the difference between each component's heat of combustion (LHV) and the reported pure component enthalpy at combustion conditions.

This process for thermochemical conversion of cellulosic biomass was designed with the goal of being energy self-sufficient. Natural gas inputs that could be used to fire the fuel combustor have been eliminated. Instead, a slipstream of "dirty" unreformed syngas and a slipstream of unreacted syngas from alcohol synthesis are used to meet the fuel demand. The downside to this is a decrease in ethanol yield. In addition, the process was designed to require no electricity purchase from the grid. An integrated combined heat and power system supplies all steam and electricity needed by the plant. While it is desired to produce no extra electricity, the steam demands of the process result in excess electricity being generated in the extraction steam turbine system.

The major process energy inputs and outputs are listed in Table 14 along with their energy flow rates. The ratio of each input and output to the biomass energy entering the system is also calculated. The biomass is of course the primary energy input; however, other energy inputs are required. Air is required for both the fuel combustor and the air separation unit, but it remains a minor energy input. Some water is used to wet the ash leaving the gasification system, however, the majority of process water is used for boiler feed water makeup and cooling water makeup. A large negative energy flow value is associated with this because it enters the process as a liquid.

Table 14. Overall Energy Analysis (LHV basis)

	Energy Flow (MMBTU/hr, LHV basis)	Ratio to Feedstock Energy Flow
Energy Inlets		
Wood Chip Feedstock (wet)	1275.6	1.000
Natural Gas	0.0	0.000
Air	2.4	0.002
Olivine	0.0	0.000
MgO	0.0	0.000
Water	-67.3	-0.053
Tar Reforming Catalyst	0.0	0.000
Other	0.0	0.000
Total	**1210.7**	**0.949**
Energy Outlets		
Ethanol	504.9	0.396
Higher Alcohols Co-product	100.2	0.079
Cooling Tower Evaporation	5.4	0.004
Flue Gas	42.1	0.033
Sulfur	0.3	0.000
Compressor Heat	49.5	0.039
Heat from Air-cooled Exchangers	374.3	0.293
Vents to Atmosphere (including excess CO_2)	1.1	0.001
Char, Sand and Ash	136.3	0.107
Catalyst Purge	0.0	0.000
Wastewater	-2.9	-0.002
Byproduct Electricity	13.2	0.010
Ambient Heat and Work Losses	19.0	0.015
Other	-32.7	-0.026
Total	**1210.7**	**0.949**

Besides the saleable alcohol products, other important process energy outlets also exist. The flue gases from the reformer fuel combustor account for about 3% of the energy in the raw biomass. Cooling tower evaporative losses, excess CO_2 vent to the atmosphere, and wastewater streams are also minor process energy outlets. A significant 11% goes out with the char, sand, and ash, with most of the heating value coming from the char. With efficient gasifiers the char content can be much lower. Some cases with lower char content are reported as part of sensitivity studies later in this report. The char content and composition out of the gasifier were based on the correlation shown in Appendix G. Two other large energy outlets come from air-cooled

interstage cooling of the compressors (3.9%) and from several other air-cooled heat exchangers (29.3%). The "other" category consists primarily of other losses from the cooling tower system (drift and blowdown), but also accounts for energy losses from condensate streams of compressors and any other outlet streams not accounted for in the other categories.

Some of this lost heat could potentially be recovered by further process heat integration. In this case there were no more cold process streams that could use the heat in the temperature ranges of the air and water cooled exchangers. Integration with external users capable of using this heat could be an option.

Overall, the process is approximately 38% efficient on an LHV basis for moisture-free biomass, as shown in Appendices D and E. Table 14 shows that approximately 47.5% of the energy in the wet raw biomass is recovered in the two alcohol products. Improvements in these energy efficiencies could result in additional cost savings to the process.

2.13 Water Issues

Water is required as a reactant, a fluidizing agent, and a cooling medium in this process. As a reactant, it participates in reforming and in water gas shift reactions. In the high pressure direct oxygen blown gasifier, it also acts as the fluidizing agent in the form of steam. Its cooling uses are outlined in Section 2.8.

Water usage is becoming an increasingly important aspect of plant design, specifically with regard to today's ethanol plants. Most ethanol plants reside in the Midwest where many places are experiencing significant water supply concerns.[47] For several years, significant areas of water stress have been reported during the growing season, while livestock and irrigation operations also compete for the available resources.

Today's dry mill ethanol plants have a high degree of water recycle. In fact, many plants use what is known as a "zero discharge" design where no process water is discharged to wastewater treatment. The use of centrifuges and evaporators enables this recycle of process water. Therefore, much of the consumptive water demand of an ethanol plant comes from the evaporative losses from the cooling tower and utility systems. Oftentimes well water, which draws from the local aquifers that are not readily recharged, is used to supply the water demands of the ethanol plants. This is driven by the need for high quality water in the boiler system. Studies have shown that water usage by today's corn ethanol plants ranges from 3-7 gallons per gallon of ethanol produced. This means that a 50 MM gal/yr dry mill will use between 150-350 MM gallons/yr of water that is essentially a non-renewable resource. This ratio, however, has decreased over time from an average of 5.8 gal/gal in 1998 to 4.2 gal/gal in 2005.[48]

Therefore, a primary design consideration for this process was the minimization of fresh water requirements, which therefore meant minimizing the cooling water demands and recycling process water as much as possible. Air-cooling was used in several areas of the process in place of cooling water (e.g., distillation condensers, compressor interstage cooling). However, there are some instances where cooling water is required to reach a sufficiently low temperature that air-cooling cannot reach.

Table 15 quantifies the particular water demands of this design. Roughly 46% of the fresh water demand is from cooling tower makeup, with most of the remainder needed as makeup boiler feed water. Some of this water is directly injected into the gasifier, but other system losses (blowdown) also exist. The overall water demand is considerably less than today's ethanol plants. This design requires 1.24 gallons of fresh water for each gallon of ethanol produced.

Table 15. Process Water Demands for Thermochemical Ethanol via Direct Gasification

Fresh Water Demands	lb per hour
Cooling Tower Makeup	28,503
Boiler Feed Makeup	32,032
Char/sand/ash Wetting	1,351
Total	**61,886**
Water Used (gal/year)	62,335,351
Ethanol Produced (gal/yr)	50,409,555
Overall Water Demand (gal water / gal ethanol)	**1.24**

The water usage in this process is lower than the indirect gasification process, which reports 1.94 gallons of water per gallon of ethanol.[2]

3 Process Economics

The total project investment (based on total equipment cost), as well as variable and fixed operating costs, were developed first. With these costs, a discounted cash flow analysis was used to determine the production cost of ethanol when the net present value of the project is zero. This section describes the cost areas and the assumptions made to complete the discounted cash flow analysis.

3.1 Capital Costs

The following sections discuss the methods and sources for determining the capital cost of each piece of equipment within the plant. A summary of the individual equipment costs can be found in Appendix C.

The capital cost estimates are based on previous reports by Phillips et al,[2] Aden et al,[3] and Spath and Eggeman.[7] Much of the costs for Phillips et al[2] came from the biomass to hydrogen report by Spath et al.[49] The original cost data was primarily from literature and Questimate (an equipment capital cost estimating software tool by Aspen Tech), not from vendor quotes. The capital costs of heat exchangers from pinch analysis (in this report) were obtained from Aspen Icarus Process Evaluator. Since most of the equipment for this report and the indirect gasifier report[2] is from similar sources, it puts both reports on a similar cost basis for comparison purposes. Using the estimated equipment costs, the purchased cost of the equipment for the specific size of the plant and the cost year was calculated. Cost factors were then used to determine the installed equipment cost. This method of cost estimation has an expected accuracy of roughly +30% to -10%. The factors used in determining the total installed cost (TIC) of each piece of equipment are shown in Table 16.[50]

Table 16. General Cost Factors in Determining Total Installed Equipment Costs

	% of TPEC
Total Purchased Equipment Cost (TPEC)	100
Purchased equipment installation	39
Instrumentation and controls	26
Piping	31
Electrical systems	10
Buildings (including services)	29
Yard improvements	12
Total Installed Cost (TIC)	247

The indirect costs (non-manufacturing fixed-capital investment costs) were estimated using the same cost factors as in the indirect gasifier report. The factors are shown in Table 17[50] and have been put as percentages in terms of total purchased equipment cost (TPEC), total installed cost (TIC), and total project investment (TPI, the sum of the TIC and the total indirect costs).

Table 17. Cost Factors for Indirect Costs

Indirect Costs	% of TPEC	% of TIC	% of TPI
Engineering	32	13	9
Construction	34	14	10
Legal and contractors fees	23	9	7
Project contingency	7.4	3	2
Total Indirect Costs	96.4	39	28

The biomass handling and drying costs as well as the gasification and gas cleanup costs were estimated by Spath et al.[49] using several reports by others that documented detailed design and cost estimates. Some of the reports gave costs for individual pieces of equipment while others grouped the equipment costs into areas. The costs from the reports were amalgamated into:

- Feedstock handling and drying
- Gasification and cleanup.

Costs from those reports scaled to a 2,000 bone dry tonne/day plant are given in Table 18.

Table 19 gives the basic dryer and gasifier design basis for the references. Spath et al.[49] used an average feed handling and drying cost from all of the literature sources. An average gasifier and gas cleanup cost was used by Spath and Eggeman[7] for the GTI gasifier.

It has to be noted that the cost estimate for the gasifier in Table 16 includes the cost of the tar reformer. Also, the gasifier section is split into two trains because of the high throughput. It was assumed that the total cost of gasification and cleanup is shared almost equally between the two gasifiers and the reformer. The Utrecht report[14] split the cost 50/50 between the two areas. The sum of the reformer and gasifier costs is close to the average cost shown in Table 16.

Table 18. Feed Handling & Drying and Gasifier & Gas Cleanup Costs from the Literature Scaled to 2,000 tonne/day Plant[49]

Reference	Scaled Feed Handling and Drying Cost $K (2002)	GTI – Scaled Gasifier and Gas Cleanup Cost $K (2002)
Breault and Morgan[51] [(a)]	$15,048	---
Dravo Engineering Companies[52] [(a)]	$14,848	---
Weyerhaeuser et al.[53] [(a)]	$21,241	---
Stone & Webster et al.[54] [(a)]	$25,067	$36,232
Wan and Malcolm[55] [(a)]	$18,947 [(b)] $14,098 [(c)]	---
Weyerhaeuser[56] [(a)]	$13,468	---
Wright and Feinberg[57] [(a)]	$26,048 – BCL design $21,942 – GTI design	$38, 605
Craig[58]	$13,680	$48,229
AVERAGE	**$18,840**	**$41,071**

Table 19. System Design Information for Gasification References[49]

Reference	Feed Handling and Drying	GTI Gasifier and Gas Cleanup
Breault and Morgan[51]	Rotary dryer	---
Dravo Engineering Companies[52]	Rotary drum dryer	---
Weyerhaeuser, et al.[53]	Steam dryer	---
Stone & Webster, et al.[54]	Flue gas dryer	Cyclones, heat exchange, & tar reformer
Wan and Malcolm[55]	Flue gas dryer	---
Weyerhaeuser[56]	Flue gas dryer	---
Wright and Feinberg[57]	Unclear	Heat exchange & solids – removal – details are not clear
Craig[58]	Rotary drum dryer	Cyclones, heat exchange, & tar reformer

The costs of reactors, heat exchangers, compressors, blowers, and pumps were estimated for a "base" size using Questimate or Aspen Icarus Process Evaluator (IPE) and then scaled using material and energy balance results from the Aspen Plus simulation. The reactors were sized based on a gas hourly space velocity (GHSV), where GHSV is measured at standard temperature and pressure, 60°F and 1 atm,[59] and a height to diameter ratio of 2. The GHSV values for the mixed alcohol reactor and tar reformer were set at 6,000/hr and 2,475/hr, respectively, as in the indirect gasification process.[2] These were used to determine the cost of catalysts loaded in the

[a] From detailed design and cost estimates
[b] Estimated from a 200 dry ton/day plant design
[c] Estimated from a 1,000 dry ton/day plant design

reactors. The heat exchanger costs were mostly developed based on the required surface area as calculated from the heat transfer equation appropriate for a 1-1 shell and tube heat exchanger:

$$Q = UA(\Delta T)_{lm} \quad \Rightarrow \quad A = \frac{Q}{U(\Delta T)_{lm}}$$

where Q is the heat duty, U is the heat transfer coefficient, A is the exchanger surface area, and $(\Delta T)_{lm}$ is the log mean temperature difference. The heat transfer coefficients were estimated from literature sources, primarily Perry et al.[22] The costs of exchangers from the pinch analysis were evaluated for their specific sizes in the base case. At present, these duties will not change as the process changes, unless the pinch calculations are specifically updated. This is acceptable as long as the total cost of the heat exchange network remains a small fraction of the overall MESP and as long as plant scale does not change significantly.

For the various pieces of equipment, the design temperature is determined to be the operating temperature plus 50°F (28°C).[60] The design pressure is the higher of the operating pressure plus 25 psi or the operating pressure times 1.1.[60] These allowances were sometimes higher for the heat exchangers from pinch analysis.

The following costs were estimated based on the Aden et al. design report[3]:

- Cooling tower
- Plant and instrument air
- Steam turbine/generator/condenser package
- Deaerator
- Alcohol separation equipment (e.g., the distillation columns and molecular sieve unit).

Appendix B contains the design parameters and cost references for the various pieces of equipment in the plant.

The capital cost for the Air Separation Unit was obtained from literature.[43] Installed cost provided was converted to equipment cost using a factor of 2.47, which is the average installation factor for this study.

3.2 Operating Costs

There are two kinds of operating costs: variable and fixed costs. The following sections discuss the operating costs, including the assumptions and values for these costs.

There are many variable operating costs accounted for in this analysis. The variables, information about them, and costs associated with each variable are shown in Table 20.

Table 20. Variable Operating Costs

Variable	Information and Operating Cost
Tar reformer catalyst	To determine the amount of catalyst inventory, the tar reformer was sized for a gas hourly space velocity (GHSV) of 2,476/hr based on the operation of the tar reformer at NREL's TCPDU where GHSV is measured at standard temperature and pressure.[59] Initial fill then a replacement of 0.01% per day of the total catalyst volume. Price: $4.67/lb[61]
Alcohol Synthesis Catalyst	Initial fill then replacement every 5 years based on typical catalyst lifetime. Catalyst inventory based on GHSV of 6,000/hr. Price: $5.25/lb[62]
Gasifier bed material	Synthetic olivine and MgO. Delivered to site by truck equipped with self-contained pneumatic unloading equipment. Disposal by landfill. Olivine price: $172.90/ton[63] MgO price: $365/ton[64]
Solids disposal cost	Price: $18/ton[65]
Diesel fuel	Usage: 10 gallon/hr plant wide use Price: $1.00/gallon[66] (see note below)
Chemicals	Boiler chemicals – Price: $1.40/lb[3] Cooling tower chemicals – Price: $1.00/lb [3] LO-CAT® chemicals – Price: $150/tonne of sulfur produced[67]
Wastewater	The wastewater is sent off-site for treatment. Price: $2.07/100ft^3 [68]

Note that diesel fuel costs have gone up significantly. The MESP will go up by approximately 0.19 cents per gallon for every dollar per gallon increase in diesel prices, which is not a significant part of the overall cost. The price of diesel was left at $1.00 per gallon in order to maintain parity with the indirect gasifier report.[2] A summary of the operating costs is shown in Appendix D.

The fixed operating costs (i.e., salaries, overhead, maintenance, etc.) used here are identical to those in the study by Phillips et al.[2] Fixed operating costs for a biochemical ethanol facility given in Aden et al. (2002)[3] were used as a starting point by Phillips et al.

The fixed operating costs used in this analysis are shown in Table 21 (labor costs) and Table 22 (other fixed costs). They are shown in 2002 U.S. dollars. The following changes in base salaries and number of employees were made compared with those used in the ethanol plant design in Aden et al. (2002).[3]

- Plant manager salary raised from $80,000 to $110,000
- Shift supervisor salary raised from $37,000 to $45,000
- Lab technician salary raised from $25,000 to $35,000
- Maintenance technician salary raised from $28,000 to $40,000

- Shift operators salaries raised from $25,000 to $40,000
- Yard employees salaries raised from $20,000 to $25,000 and number reduced from 32 to 12
- General manager position eliminated
- Clerks and secretaries salaries raised from $20,000 to $25,000 and number reduced from 5 to 3.

The number of yard employees was changed to reflect a different feedstock and feed handling system compared with Aden et al. (2002).[3] Handling baled stover requires more hands-on processing compared with handling a wood chip feedstock. Based on a 4-shift system, three yard employees were estimated to be needed, mostly to run the front end loaders. The general manager position was eliminated because a plant manager would likely be sufficient for this type of facility. Biomass gasification plants are more likely to be operated by larger companies instead of operating like the dry mill ethanol model of farmer co-ops. Finally, the number of clerks and secretaries was reduced from 5 to 3. The estimate of three comes from needing one person to handle the trucks and scales entering and leaving the facility, one to handle accounting matters, and another to answer phones and do administrative work.

Table 21. Labor Costs

Position	*Salary*	Number	Total Cost
Plant manager	$110,000	1	$110,000
Plant engineer	$65,000	1	$65,000
Maintenance supervisor	$60,000	1	$60,000
Lab manager	$50,000	1	$50,000
Shift supervisor	$45,000	5	$225,000
Lab technician	$35,000	2	$70,000
Maintenance technician	$40,000	8	$320,000
Shift operators	$40,000	20	$800,000
Yard employees	$25,000	12	$300,000
Clerks & secretaries	$25,000	3	$75,000
Total salaries (2002 $)			$2,080,000
(2005 $)			$2,270,000

Since the salaries listed above are not fully loaded (i.e., do not include benefits), a general overhead factor was used. This also covers general plant maintenance, plant security, janitorial services, communications, etc. The 2003 PEP yearbook[69] lists the national average loaded labor rate at $37.66 per hr. Using the salaries in Table 21 above along with the 60% general overhead factor from Aden et al.[3] gave an average loaded labor rate of $30 per hr. To more closely match the PEP yearbook average, the overhead factor was raised to 95%. The resulting average loaded labor rate was $36 per hr.

Table 22. Other Fixed Costs

Cost Item	Factor	Cost
General overhead	95% of total salaries	$2,155,000
Maintenance[50]	2% of total project investment	$5,082,000
Insurance & taxes[50]	2% of total project investment	$5,082,000

The updated salaries in Table 21 above were examined against salaries from a free salary estimation tool[70] that uses Bureau of Labor Statistics data and several other sources. Because the biomass analysis does not reflect a specific site in the U.S., National Average Salaries for 2003 were used. With such an extensive listing of job titles in the salary estimation tool, a general position such as "clerks and secretaries" could be reflected by multiple job titles. In these instances, care was taken to examine several of the possible job titles that were applicable. A list of the job positions at the production plant and the corresponding job titles in the salary estimation tool[70] is shown in Table 23. Overall, the salaries used in the biomass-to-hydrogen production plant design are close to the U.S. national average values given in column 4.

Table 23. Salary Comparison

Job Title in Biomass Plant	Corresponding Job Title in Salary Estimating Tool[70]	Salary Range (17th to 67th percentile)	Average Salary (U.S. national average)	Salary used in Biomass Plant Design (see Table 21)
Plant manager	Plant manager (experience)	$81,042-$220,409	$106,900	$110,000
Plant engineer	Plant engineer	$36,213-$66,542	$58,324	$65,000
Maintenance supervisor	Maintenance crew supervisor	$35,036-$53,099	$45,191	$60,000
	Supervisor maintenance	$34,701-$56,097	$47,046	
	Supervisor maintenance & custodians	$23,087-$45,374	$39,924	
Lab manager	Laboratory manager	$38,697-$70,985	$51,487	$50,000
Shift supervisor	Supervisor production	$32,008-$51,745	$43,395	$45,000
Lab technician	Laboratory technician	$25,543-$41,005	$34,644	$35,000
Maintenance technician	Maintenance worker	$27,967-$46,754	$39,595	$40,000
Shift operators	Operator control room	$33,983-$61,362	$49,243	$40,000
Yard employees	Operator front end loader	$24,805-$39,368	$31,123	$25,000
Clerks & secretaries	Administrative clerk	$19,876-$25,610	$26,157	$25,000
	Secretary	$20,643-$31,454	$26,534	
	Clerk general	$15,984-$25,610	$22,768	

Overall, Aden et al.[3] lists fixed operating costs totaling $7.54MM in $2000. Using the labor indices, this equates to $7.85MM in $2002. The mixed alcohols design report using indirect gasification[2] had fixed operating costs of $12.06MM in $2005. The fixed operating costs calculated by this study were $14.59MM in $2005 because of higher maintenance, insurance, and taxes on the higher capital costs.

3.3 Value of Higher Alcohol Co-Products

The alcohol synthesis process will create higher molecular weight alcohols. The value of this co-product will depend on the market where it is sold. Two extreme cases were envisioned. At the high end, these co-products might be sold into the chemical market. This could command a high value, upward of $3.70 to $4.20 per gallon.[62] However, it is unlikely that the market would support more than one or two biomass plants at these prices. Because of this, the biomass process did not include any detailed separation or cleanup of the separate alcohols. It is envisioned that if this co-product was sold for this purpose, it would be transferred "over the fence" as is, and the buyer would take on the costs of separation and cleanup. So, even at the high end, the highest value would be some fraction of the chemical market value.

At the low end, the co-product could command a value for a fuel with minimal ASTM standards on its specifications. This would be priced similar to a residual fuel oil. Historically, this is about 80% of gasoline price.[71] Using the $1.07 per gallon MESP as a scaled reference gasoline price (adjusted for ethanol's lower heating value), this translates to $0.85 per gallon.

For the baseline case, a middle ground was chosen. It is anticipated that the higher alcohols co-product would make an excellent gasoline additive or gasoline replacement in its own right, though engine testing and certification would be required. If this is done, then it should command a price similar to that of gasoline. Again using the $1.07 per gallon MESP as a scaled reference gasoline price, and adjusting to n-propanol's heating value (the major constituent of the higher alcohol stream), then its value should be $1.25 per gallon. However, since no special efforts were taken in the process design to clean up this stream to meet anticipated specifications, its value is discounted to $1.15 per gallon.

3.4 Minimum Ethanol Selling Price

Once the capital and operating costs were determined, a minimum ethanol selling price (MESP) was determined using a discounted cash flow rate of return analysis. The methodology used is identical to that used in Phillips et al.[2] and Aden et al.[3] The MESP is the selling price of ethanol that makes the net present value of the process equal to zero with a 10% discounted cash flow rate of return over a 20 year plant life. The base case economic parameters used in this analysis are given in Table 24. A sensitivity analysis was performed to examine the MESP for different financial scenarios. These are discussed in Section 4.

Table 24. Economic Parameters

Assumption	Value
Internal rate of return (after-tax)	10%
Debt/equity	0%/100%
Plant life	20 years
General plant depreciation[a]	200% DDB
General plant recovery period	7 years
Steam plant depreciation[a]	150% DDB
Steam plant recovery period	20 years
Construction period 1st 6 months expenditures Next 12 months expenditures Last 12 months expenditures	2.5 years 8% 60% 32%
Start-up time Revenues Variable costs Fixed costs	6 months 50% 75% 100%
Working capital	5% of Total Capital Investment
Land	6% of Total Purchased Equipment Cost (Cost taken as an expense in the 1st construction year)

4 Process Economics, Sensitivity Analyses, and Alternate Scenarios

The cost of ethanol as determined in the previous section was derived using technology that has been developed and demonstrated or is currently being developed as part of the OBP research program. Unlike the indirect gasification process, the cost target of $1.07 in 2005 dollars appears to be unachievable using the direct gasification process when using a process design similar to the indirect gasification process. It is unlikely that design modifications will be able to drop the cost of ethanol below $1.07 per gallon. A summary of the breakdown of costs is depicted in Figure 7 and costs are further tabulated in Appendix D. Costs in 2007 dollars are shown in Appendix I. Cost comparisons with the indirect gasification process[2] are shown Appendix J.

[a] The depreciation amount was determined using the same method as that documented in Aden et al.[3] using the IRS Modified Accelerated Cost Recovery System (MACRS).

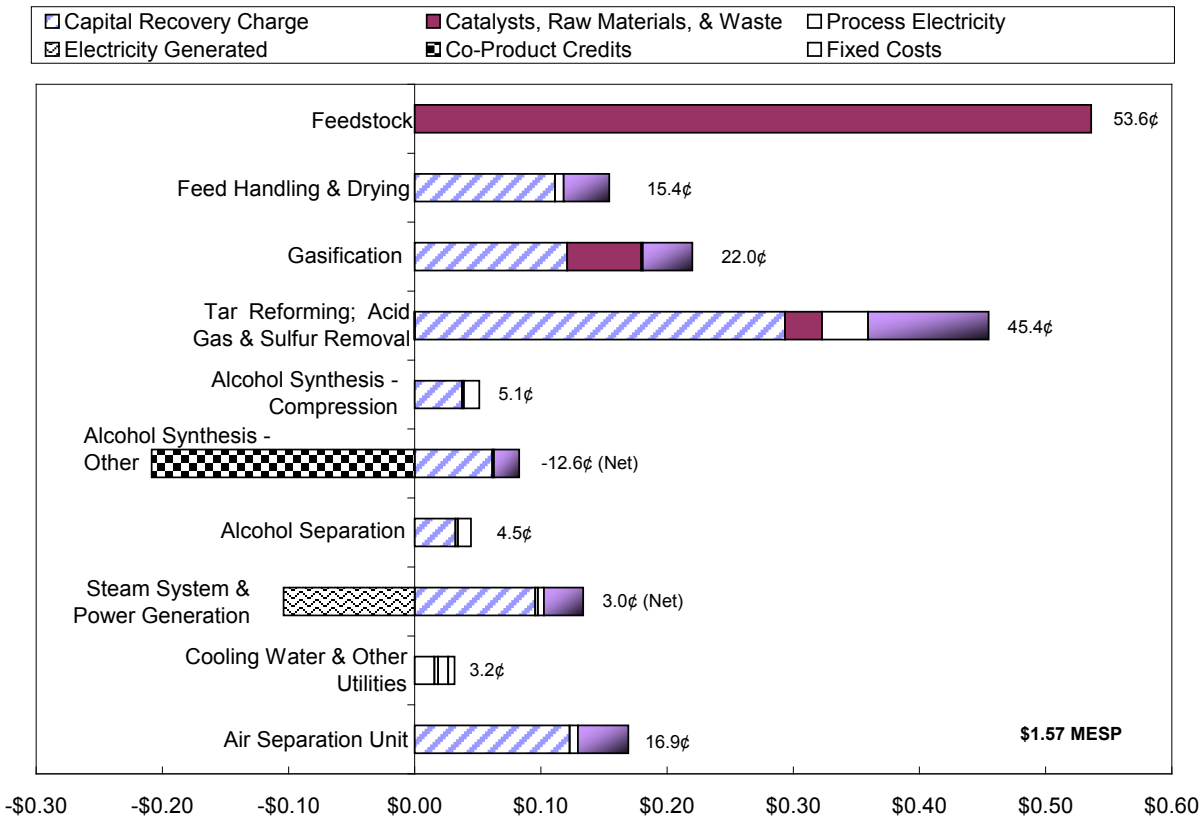

Figure 7. Cost contribution details from each process area

This cost contribution chart shows two different co-product credits: alcohols from the Alcohol Synthesis area and electricity from the Steam System & Power Generation area. As mentioned earlier, it was not possible to achieve a net zero electricity production with the process design derived from the indirect gasification study.[2] It will be beneficial to the overall economics if this is done by modifying the process design.

The cost year chosen for the analysis had a significant effect on the results. As discussed in Section 1.1, capital costs increased significantly after 2003 primarily because of the large increase in steel costs worldwide. Figure 8 depicts how the MESP for this process would change depending on the cost year chosen for the analysis. Notice that for the years 2000 to 2003 the MESP is much lower, at $1.37 to $1.40 per gallon ethanol, than the $1.57 determined for 2005. Appendix I shows values that were calculated after adjusting for the projected feedstock costs based on the Biomass Multi-Year Program Plan[27] and in 2007 dollars.

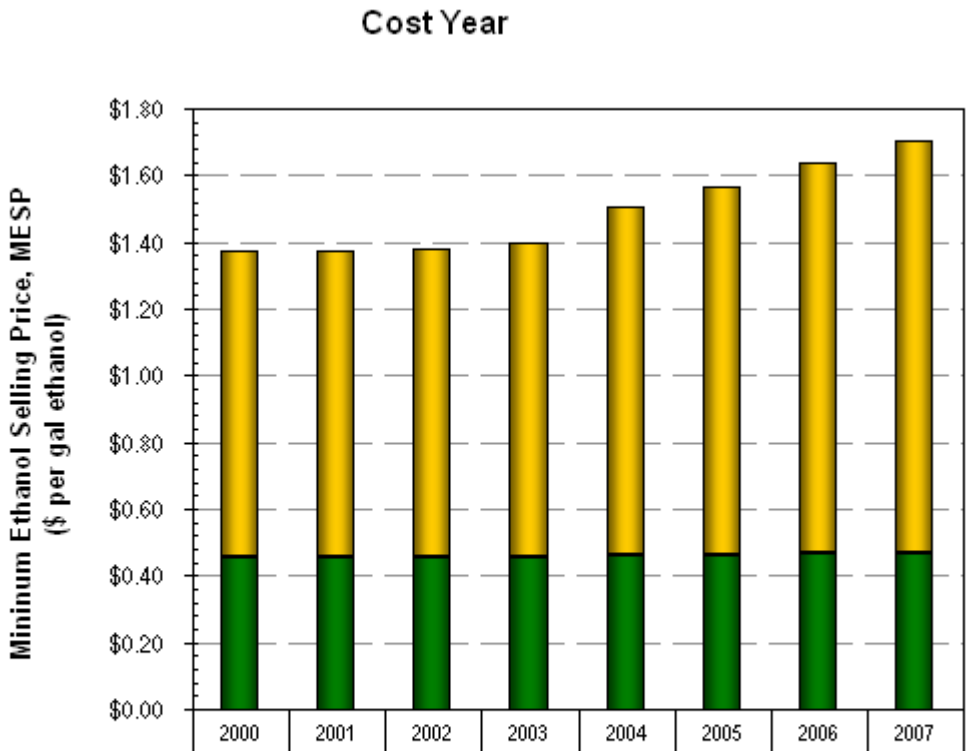

	2000	2001	2002	2003	2004	2005	2006	2007
Conversion Costs	$0.92	$0.92	$0.92	$0.94	$1.04	$1.10	$1.17	$1.23
Feedstock Contribution	$0.46	$0.46	$0.46	$0.46	$0.46	$0.46	$0.47	$0.47
Minimum Ethanol Selling Price ($/gal)	$1.37	$1.38	$1.38	$1.40	$1.50	$1.57	$1.64	$1.70

Figure 8. Effect of cost year on MESP[a]

The process costs (as indicated by the MESP) are determined from various assumptions about technology (based upon 2012 research targets), markets (such as the value of the higher alcohol co-products), and various financial assumptions (such as required Return on Investment, or ROI). There are varying degrees of uncertainty when any research target cannot be met or a market or financial assumption does not hold. In addition, uncertainty about equipment design and installation and construction costs will impact the economics. The key is to understand the impact of those types of parameters that are likely to vary and how they might be controlled to a definable range. Discussed here are process targets that had been identified *a priori* as key ones to understand and achieve. (As can be seen from the sensitivity results, many items examined had much less effect on the MESP than had been thought.) In most cases, values used for the sensitivities are picked from current experimental data to demonstrate the effect of technology advancement (or lack of) on the economic viability of the process.

[a] Note that the relative splits between feedstock and conversion costs have been scaled to attribute proportions of the costs to the mixed alcohol and electricity co-products. So, the feedstock contribution appears to be different than what is depicted in the cost contribution chart for the different areas. This accounting practice was kept the same as in the 2007 Phillips et al. design report.

The results for the sensitivity analyses discussed in the following sections are depicted in Figure 9; those sensitivities directly impacted by research programs are shown first. Nearly all of these ranges represent variations of a single variable at a time (e.g., varying ash content while holding the ratio of the non-ash elements constant). There are a few exceptions to this:

- The feedstock comparison of corn stover to lignin necessitated varying the ultimate elemental analysis, ash content, and moisture content simultaneously.
- The Combined Tar Reformer Conversions incorporated all of the ranges listed for the methane, benzene, and tar simultaneously.
- In some cases, especially in the high moisture and ash content feeds, the tar reformer temperature had to be raised in order to supply enough heat to be able to dry the feedstock to the specified 5% moisture content level. In these cases the excess electricity generated is minimized because much of the heat is used up in drying the feed.

Note that all items in the chart have values associated with them. If a bar is not readily seen, then the MESP effect over the range listed is insignificant.

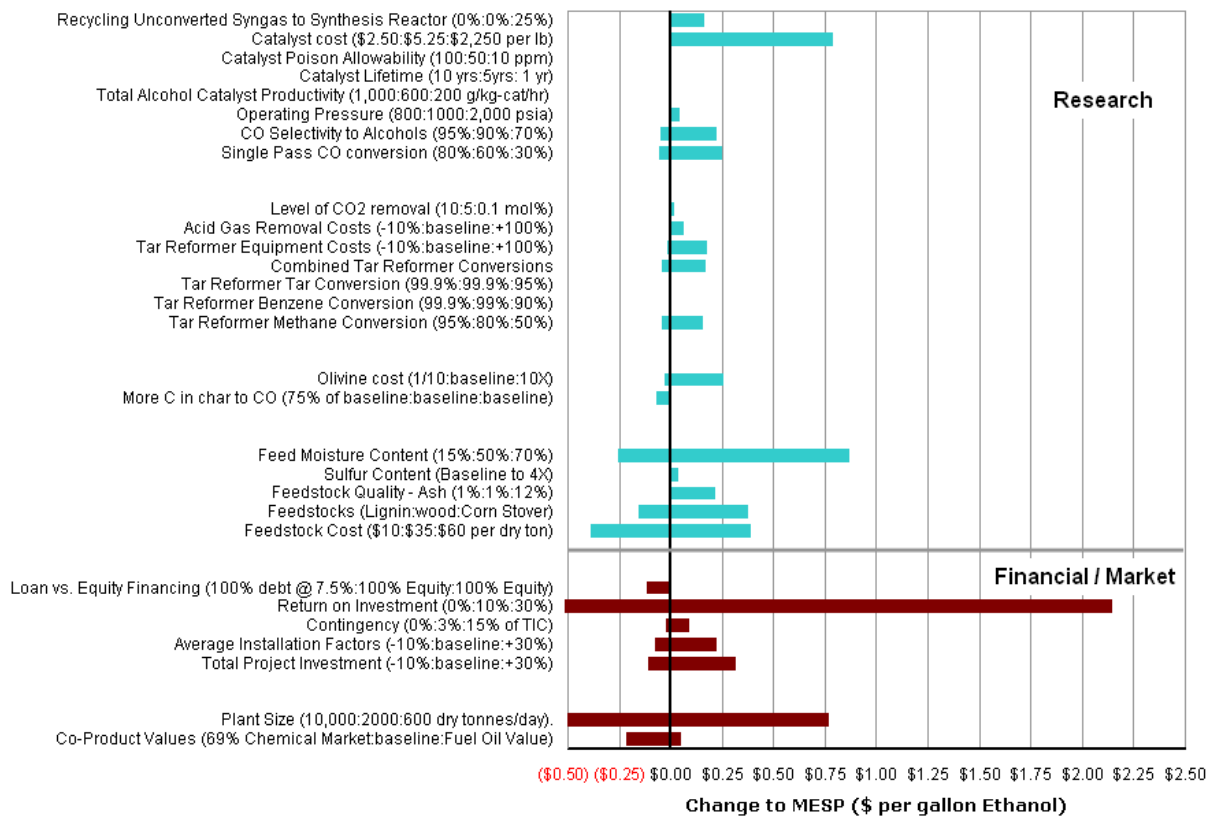

Figure 9. Results of sensitivity analyses

All the scenarios are discussed further in the following sections.

4.1 Financial Scenarios

These parameters have the greatest effect on the MESP, but R&D has the smallest direct effect on them. In particular, the required ROI for the project could more than double the calculated MESP. Successful R&D and demonstration projects would, at best, ease the ROI requirements of corporations and/or lending institutions and reduce the required MESP toward the baseline case in this report.

A conceptual design like this is normally thought to give accuracy in the capital requirements of -10% to +30%. Using this range for the TPI (Total Project Investment) gives an MESP range of -7% to +20%.

4.2 Feedstocks

Because this process has been designed for utilization of forest resources, there may be little control over the feedstock quality coming to the plant.[a] The two most important feedstock quality parameters that can impact the process economics are moisture and ash content.

The high range of the ash content examined here is more indicative of agricultural residues (from fertilizer) or lignin-rich biochemical process residues; forest resources should have ash contents near that of this baseline case (about 1%). It was originally thought that the cost effects of high ash content could be damped by basing feedstock payments on a dry and *ash-free* basis, not just a dry basis. However, Figure 10 shows that this is not the case. Keeping the feedstock cost constant on a moisture and ash free ("maf") basis will reduce the MESP somewhat, but there is an inherent loss of alcohol yield that is more important in the increased MESP. Some of this yield loss is due to the necessity to divert more raw syngas to the fuel system for heat and power requirements.

[a] At least less so than using agricultural residues or energy crops that can be bred for specific properties in these lignocellulosic materials.

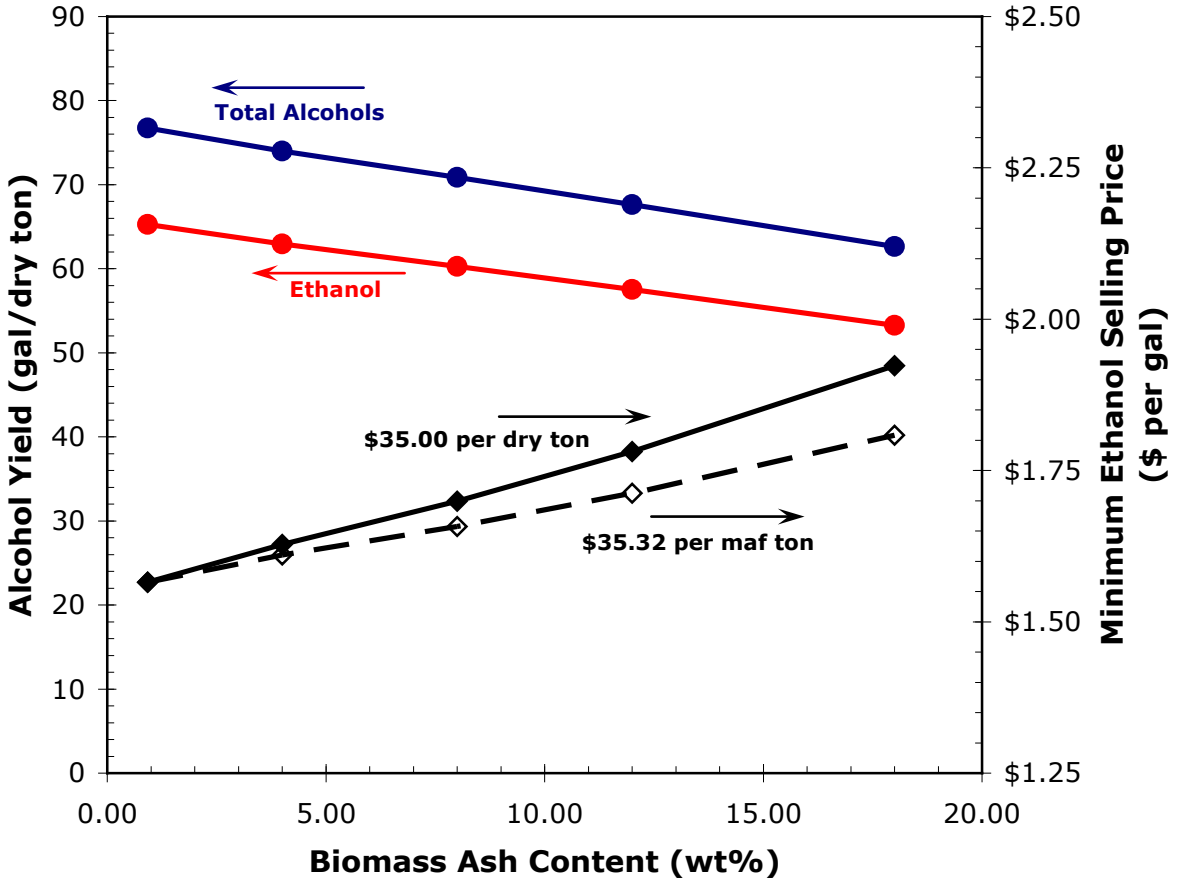

Figure 10. Sensitivity analysis of biomass ash content

The biomass feedstock's moisture content is a problem if it is higher than the baseline 50%. This is not envisioned as being very likely except in the case of processing wet ensiled agricultural residues or energy crops; however, these feedstocks are envisioned to be processed more by biochemical means, not thermochemical means. Drier feedstocks will have lower MESPs because of decreased heat requirements to dry the incoming feedstock; this directly relates to lower raw syngas diversion to heat and power and higher alcohol yields. This is depicted in Figure 11 and Figure 12. As the moisture content increases, the alcohol yield will decrease because more raw syngas must be diverted for heat. Note that very low moisture contents do not continue to give increased alcohol yields; this is because a certain amount of raw syngas needs to be diverted to meet process temperature conditions. Heat that is not wasted in drying the biomass is diverted for generating power, which drops the MESP but does not increase alcohol yields.

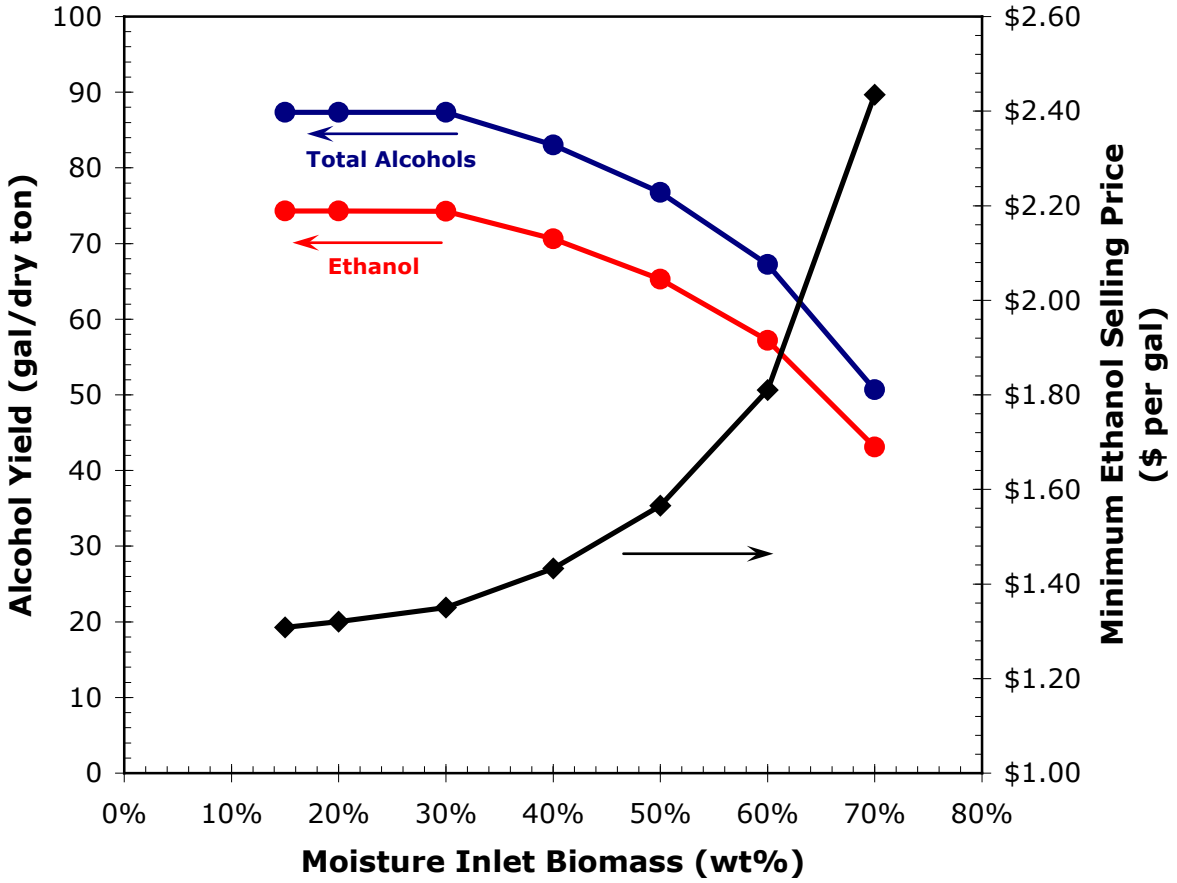

Figure 11. Sensitivity analysis of biomass moisture content

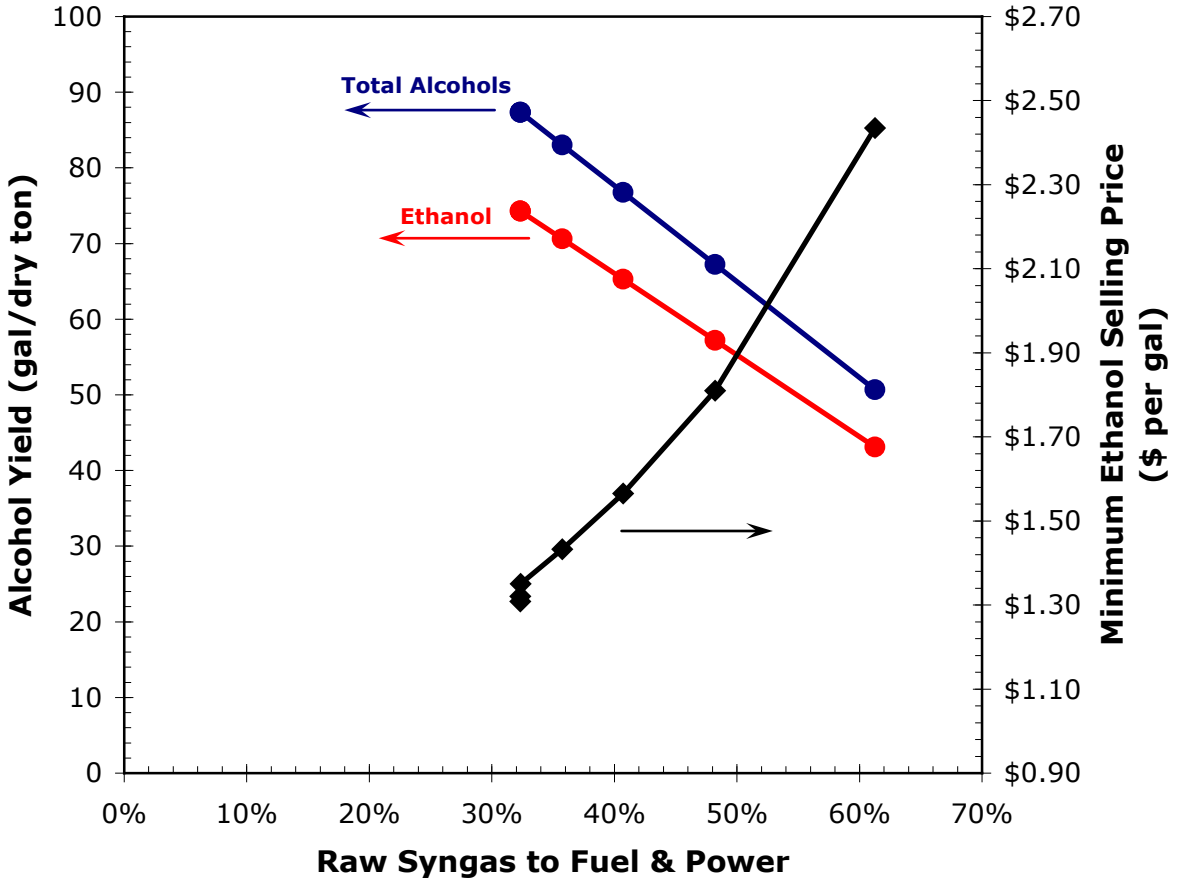

Figure 12. Sensitivity analysis of raw syngas diverted for heat and power due to biomass moisture content

Two combined scenarios were analyzed for two different kinds of feedstocks: corn stover and lignin-rich residues from a biochemical process. The compositions of both are consistent with the Phillips et al.[2] and Aden et al. design reports.[3] Corn stover gives rise to a higher MESP even though its elemental analysis is very similar to wood and its moisture content is very low. The overwhelming effect is due to its higher ash content. Lignin-rich residues have a much lower MESP. Lignin-rich residues also have the virtue of making much more electricity than the process needs. The excess electricity available is a very positive sign because incorporating a thermochemical conversion unit with a biochemical conversion unit and make the heat and power for the entire complex will be cost effective. The feed handling system may have to be different, however, since lignin tends to get very powdery when dried; direct contact with the flue gas for drying would very likely lead to high losses of the feedstock. Drying with indirect contact of the heating medium must be investigated.

4.3 Thermal Conversion

The effect of increasing the olivine cost by an order of magnitude (due to increased olivine makeup and/or increased cost because of catalytic modification) could increase the MESP by

17%. This can be significant. However, if this is because of catalyst modification, it is expected that it will lead to savings in downstream processing units.

The amount of char coming out of the direct gasifier is higher than in the indirect gasification case[2] because the indirect gasification process involves near complete combustion of the char in the char combustor, as opposed to partial oxidation in the direct gasifier. The base case process used in this study produces char at the rate of 10,330 lb/hr from a moisture free basis feed of 183,720 lb/hr, which is roughly 5.6%.

Figure 9 shows a scenario where 5,570 lb/hr or 3% char is produced. The MESP drops by about 4% (from $1.57 to $1.50) for this extra conversion of char. It can be expected that improvements in gasifier designs will improve char utilization and lower the cost of ethanol from this process.

4.4 Cleanup & Conditioning

These scenarios appeared to have a small effect on the MESP. However, the impact is greater than in the indirect gasification study.[2] This is because of the higher cost of the higher pressure tar reforming equipment compared with the indirect gasifier study. Although the numbers show a small impact, there can be greater economic repercussions than the numbers show. The scenarios primarily show cost effects due to the material and energy balances. Since the amount of tar is small compared with the amount of CO and H_2, these effects are small. In reality, cleanup and conditioning is absolutely required for acceptable performance of gas compressors, wastewater treatment, and alcohol synthesis catalysts. Excessive tars in the syngas would significantly impact compressors and wastewater treatment, with severe consequences to equipment and increased operating costs that are not rigorously modeled here. So, not meeting these targets would give poor performance, leading to greater cost effects than reflected by the sensitivity analysis for this area.

4.5 Fuels Synthesis

These scenarios show the importance of the R&D for the synthesis catalysts. Poor performance (conversion and selectivity) could increase MESP by 15% or more for the ranges shown in Figure 9. This could be because of actual non-target catalyst formulations or poor performance in Cleanup and Conditioning that leads to poor alcohol synthesis catalyst performance. The catalyst cost sensitivity range was extremely large, from $2.50/lb to more than $2,250/lb. This was done to bracket a variety of potential catalyst systems, not just cobalt moly-sulfide. Exotic metals such as rhodium (Rh) or ruthenium (Ru) can add considerable cost to a catalyst system even at relatively low concentrations. At low catalyst costs, total CO conversion and alcohol selectivity (CO_2-free basis) have the largest impact on the overall MESP. The catalyst productivity (g/kg/hr) did not show much impact over the sensitivity range chosen. In reality, all of these catalyst performance indicators are tightly linked. It is unlikely that research could change one without affecting the others.

4.6 Markets

Crediting the co-product higher alcohols with the lower fuel oil value increases the MESP by about 3%. But, of even more significance is that selling these higher alcohols for even 69% of their chemical market value will lead to a significant reduction of MESP (about 13%). This shows that the first couple of thermochemical conversion plants could get a significant economic advantage in their early life by being able to do this.

4.7 Operating the Gasifier at a Lower Pressure

The lower conversions in the tar reformer (when operating at higher pressures than in the Phillips et al. report[2]) have a significant impact on the economics as quantified in Appendix L (about $0.27/gallon ethanol). Hence the economics of the gasifier operating at a lower pressure of 100 psi were also studied. The low limit of the data available for the gasifier was around 100 psi.[24] It is shown in Appendix K that the economics are worse than the base case of this study (440 psi), primarily because of higher compression costs.

4.8 Hypothetical Case to Delineate the Impact of Pressure on CH_4 Conversion

Appendix L shows a hypothetical case in which the tar reformer conversion target for methane was not discounted for the lower equilibrium conversion at the higher pressures (compared with the indirect gasifier design[2]). The analysis shows that the MESP would be higher than in the indirect gasification process (at $1.30/gallon). The MESP is higher primarily because of the capital cost of the air separation unit and the loss of carbon via unconverted char. The base case shows that the lower conversion of methane, when superimposed on these effects, contributes another 27¢/gallon to the MESP. The direct gasification process for the production of ethanol would not meet the cost target of $1.07/gallon even in this hypothetical case.

5 Conclusions

It was shown earlier that it is possible to produce ethanol from biomass at or below the cost competitive target of $1.07 per gallon using syngas from an *indirect* steam gasifier.[2] The purpose of this study was to compare the effect on ethanol MESP if an oxygen-blown direct gasifier was used instead. The overall process was not modified beyond the necessary changes such as the addition of an air separation unit and the replacement of the indirect gasifier with a direct one. There were also changes to the heat exchanger network because of the different thermal profile of the process. Unlike the indirect gasification case, there was an excess of about 4 MW of electricity sold to the grid in the base case. This is because the steam demand in the process is met by the use of an extractive steam turbine, which generates electricity. The MESP for ethanol from this process was $1.57 using 2012 targets and 2005 cost basis. This price is higher than the $1.07 target (using 2005 dollars and feedstock costs). The higher predicted price confirms an earlier notion that indirect gasification is the more economical route for the production of mixed alcohols when using the assumptions for tar reforming and synthesis catalysts outlined in this report. A cost comparison chart is shown in Appendix J.

Some of the major differences between the two processes are:

- There is lower production of mixed alcohols from the same amount of feed because a greater amount of the syngas from the gasifier is diverted to meet the energy demands of the process.
- A considerably larger amount of carbon is lost via char.
- The lower possible equilibrium conversion of hydrocarbons (primarily of methane) in the reformer at higher pressures has a significant negative impact on the economics.
- The high pressure direct gasification process required the addition of carbon dioxide to mitigate the high H_2:CO ratios after tar reforming. This adds to the conversion cost by

adding to the capital and energy costs during acid gas removal. The impact of the higher CO_2 produced by the direct gasifier is inconsequential because the process requires the recycle of more CO_2 on top of what is produced in the gasifier.

- The capital costs of the high pressure gasifier and tar reformer are more than the lower pressure gasifier and tar reformer used in the indirect gasification process.
- The air separation unit is an added cost in the direct gasification process.
- Total energy used by the compressors was lower in the high pressure case. This is because more energy is expended to compress the gasified products in the low-pressure case than to compress the reactants, much of which are solid in the high-pressure case.
- Water usage was 1.24 gallon/gallon of ethanol produced in this process compared with 1.94 gallon/gallon in the indirect process. Water was recycled after the quench scrubber in both processes. Similar water treatment was used for recycled water in both cases.

While the direct gasification process shows higher costs for the specific products and process configurations used in this study, there may be advantages to using this process for other synthesis products that require higher H_2:CO ratios for fuel synthesis, e.g., methanol and Fischer-Tropsch liquids. Also, if an air separation unit is co-located with this unit, the cost of oxygen can go down dramatically. Improved efficiencies of char conversion in the direct gasifier can also improve the economics. Practical realities like technology maturity and reliability can also impact the selection of gasifiers for the conversion of biomass to liquid fuels.

6 Future Work

Many of the goals for future work listed in the indirect gasification study[2] are true for this direct gasification process as well.

Future R&D work to develop and demonstrate reforming and synthesis catalysts is inherent in this study. Many other areas of demonstration and process development are also required:

- Demonstrate gasifier performance on other feedstocks (agricultural residues such as corn stover, energy crops such as switchgrass, and lignin-rich residues that would be available from a co-located biochemical conversion process). Of particular importance for the lignin-rich residues is the impact on process performance of trace amounts of chemicals used in the biochemical processing that might negatively impact the thermochemical conversion process.

- Examine the trade-offs of the greater use of water cooling (greater water losses in the cooling tower) vs. air cooling (greater power usage) vs. organic Rankine cycle for cooling and power production.

- Better understand the trade-offs between operating parameters in the alcohol synthesis reactor (pressure, temperature, extent of reaction, extent of methanol recycle). A “tuned” kinetics-based model would be required for this.

- Explore alternate synthesis reactor configurations (slurry phase vs. fixed bed).
- Understand trade-offs between a close to energy neutral alcohol production facility and one that could also supply heat and electricity to a co-located biochemical conversion facility.
- Further explore the potential benefits of integrating biochemical and thermochemical technologies.
- Examine the potential for decreased heat integration complexity and increased overall energy efficiency.
- Better understand the kinetics of catalytic tar reforming and deactivation and the necessary regeneration kinetics to achieve a sustainable tar reforming process.
- Examine the emissions profile from the plant and explore alternate emissions control equipment.
- Experimentally examine the effect of pressure on the performance of the tar reformer and tar reformer catalysts to better quantify economic tradeoffs and optimal operating pressures for the production of mixed alcohols using direct gasification.
- Examine ways to improve char utilization in a direct gasifier.
- Study the use of a high temperature slagging gasifier with the same downstream process configuration.
- Study the use of direct gasifiers for the production of other synthesis fuels.
- Obtain more recent quotes of gasifier costs for use in the economic analysis.
- Investigate and incorporate more economical ways for acid gas cleanup.

7 References

[1] Office of the Press Secretary. "State of the Union: The Advanced Energy Initiative." The White House Web site, http://georgewbush-whitehouse.archives.gov/news/releases/2006/01/20060131-6.html. Accessed June 1, 2009.

[2] Phillips, S.; Aden, A.; Jechura, J.; Dayton, D.; Eggeman, T. *Thermochemical Ethanol via Indirect Gasification and Mixed Alcohol Synthesis of Lignocellulosic Biomass.* NREL/TP-510-41168. Golden, CO: National Renewable Energy Laboratory, April 2007. http://www.nrel.gov/docs/fy07osti/41168.pdf.

[3] Aden, A.; Ruth, M.; Ibsen, K.; Jechura, J.; Neeves, K.; Sheehan, J.; Wallace, B.; Montague, L.; Slayton, A.; Lukas, J. *Lignocellulosic Biomass to Ethanol Process Design and Economics Utilizing Co-Current Dilute Acid Prehydrolysis and Enzymatic Hydrolysis for Corn Stover*. NREL/TP-510-32438. Golden, CO: National Renewable Energy Laboratory, June 2002. http://www.nrel.gov/docs/fy02osti/32438.pdf.

[4] "CEH Marketing Research Report - Ethyl Alcohol." *Chemical Economics Handbook — SRI International*. SRI Consulting, Menlo Park, CA. 2002; pp. 50-51.

[5] Wooley, R.; Ruth, M.; Sheehan, J.; Ibsen, K. *Lignocellulosic Biomass to Ethanol Process Design and Economics Utilizing Co-Current Dilute Acid Prehydrolysis and Enzymatic Hydrolysis Current and Futuristic Scenarios*. NREL/TP-580-26157. Golden, CO: National Renewable Energy Laboratory, July 1999. http://devafdc.nrel.gov/pdfs/3957.pdf.

[6]Perlack, R.D.; Wright, L.L.; Turhollow, A.F.; Graham, R.L.; Stokes, B.J.; Erbach, D.C. *Biomass as Feedstock for a Bioenergy and Bioproducts Industry: The Technical Feasibility of a Billion-Ton Annual Supply*. A joint U.S. Department of Energy and U.S. Department of Agriculture report. DOE/GO-102995-2135, ORNL/TM-2005/66. Oak Ridge, TN: Oak Ridge National Laboratory, April 2005. http://www1.eere.energy.gov/biomass/pdfs/final_billionton_vision_report2.pdf.

[7] Spath, P.; Eggeman, T. *Effect of Oxygen Purity on Direct-Fired Gasifier & Comparison to Indirect Gasification*. NREL Milestone Report. Golden, CO: National Renewable Energy Laboratory, September 30, 2005.

[8] Bain, R. L.; Craig, K. R.; Overend, R. P. "Gasification for Heat and Power, Methanol, and Hydrogen," Chapter 9.2. Rosillo-Calle, F. et al., ed. *Industrial Uses of Biomass Energy*. London, UK: Taylor and Francis, 2000. ISBN-0-7484-0884-3.

[9] Wyman, C.E.; Bain, R. L.; Hinman, N.D.; Stevens, D.J. "Ethanol and Methanol from Cellulosic Materials," Chapter 21. Johansson, T.B. et al., ed. *Renewable Energy: Sources for Fuels and Electricity*. Washington, DC: Island Press, 1993.

[10] Chem Systems. *Assessment of Costs and Benefits of Flexible and Alternative Fuel Use in the U.S. Transportation Sector*. DOE/PE-0093. Work performed by Chem Systems, Tarrytown, NY. Washington, DC: U.S. Department of Energy, November 1989; 46 pp.

[11] Feldmann, H.F.; Paisley, M.A.; Appelbaum, H.R.; Taylor, D.R. *Conversion of Forest Residues to a Methane-Rich Gas in a High- Throughput Gasifier*. PNL-6570. Work performed by Battelle Columbus Division, Columbus, OH. Richland, WA: Pacific Northwest Laboratory, May 1988.

[12] Wan, E. I.; Fraser, M. D. "Economic Assessment of Advanced Biomass Gasification Systems." *Proceedings of the IGT Biomass Conference; February 1989, New Orleans, LA*. McLean, VA: Science Applications International Corporation, 1989.

[13] Wyman, C.E.; Bain, R. L.; Hinman, N.D.; Stevens, D.J. "Ethanol and Methanol from Cellulosic Materials," Chapter 21. Johansson, T.B. et al., ed. *Renewable Energy: Sources for Fuels and Electricity*. Washington, DC: Island Press, 1993.

[14] Hamelinck, C. N.; Faaij, A. P. C. *Future Prospects for Production of Methanol and Hydrogen from Biomass*. Report No. NWS-E-2001-49. Utrecht, the Netherlands: Utrecht University, 2001. ISBN-90-73958-84-9.

[15] Williams, R. H.; Larson, E. D.; Katofsky, R.E.; Chen, J. *Methanol and Hydrogen from Biomass for Transportation, with Comparisons to Methanol and Hydrogen from Natural Gas and Coal*. PU/CEES Report No. 292. Princeton, NJ: Princeton University, July 1995.

[16] Nexant Inc. *Equipment Design and Cost Estimation for Small Modular Biomass Systems, Synthesis Gas Cleanup, and Oxygen Separation Equipment, Task 1: Cost Estimates of Small Modular Systems*. NREL/SR-510-39943. Work performed by Nexant Inc., San Francisco, CA. Golden, CO: National Renewable Energy Laboratory, May 2006. http://www.nrel.gov/docs/fy06osti/39943.pdf.

[17] Nexant Inc. *Equipment Design and Cost Estimation for Small Modular Biomass Systems, Synthesis Gas Cleanup, and Oxygen Separation Equipment, Task 2: Gas Cleanup Design and Cost Estimates – Wood Feedstock*. NREL/SR-510-39945. Work performed by Nexant Inc., San Francisco, CA. Golden, CO: National Renewable Energy Laboratory, May 2006. http://www.nrel.gov/docs/fy06osti/39945.pdf.

[18] Nexant Inc. *Equipment Design and Cost Estimation for Small Modular Biomass Systems, Synthesis Gas Cleanup, and Oxygen Separation Equipment, Task 2.3: Sulfur Primer*. NREL/SR-510-39946. Work performed by Nexant Inc., San Francisco, CA. Golden, CO: National Renewable Energy Laboratory, May 2006. http://www.nrel.gov/docs/fy06osti/39946.pdf.

[19] Nexant Inc. *Equipment Design and Cost Estimation for Small Modular Biomass Systems, Synthesis Gas Cleanup, and Oxygen Separation Equipment, Task 9: Mixed Alcohols From Syngas — State of Technology*. NREL/SR-510-39947. Work performed by Nexant Inc., San Francisco, CA. Golden, CO: National Renewable Energy Laboratory, May 2006. http://www.nrel.gov/docs/fy06osti/39947.pdf.

[20] Garrett, D.E. *Chemical Engineering Economics*. New York: Van Nostrand Reinhold, 1989.

[21] Peters, M.S.; Timmerhaus, K.D. *Plant Design and Economics for Chemical Engineers*. 5th edition. New York: McGraw-Hill, Inc., 2003.

[22] Perry, R.H.; Green, D.W.; Maloney, J.O. *Perry's Chemical Engineers' Handbook*. 7th edition. New York: McGraw-Hill, Inc., 1997.

[23] Chemical Engineering Plant Cost Index. *Chemical Engineering*. May 2008.

[24] Evans, R.J.; Knight, R.A.; Onischak, N.; Babu, S.P. *Development of Biomass Gasification to Produce Substitute Fuels*. PNL-6518. Richland, WA: Pacific Northwest Laboratory, March 1988.

[25] Craig, K.R.; Mann, M.K. *Cost and Performance Analysis of Biomass-Based Integrated Gasification Combined-Cycle (BIGCC) Power Systems*. NREL/TP-430-21657. Golden, CO: National Renewable Energy Laboratory, October 1996. http://www.nrel.gov/docs/legosti/fy97/21657.pdf.

[26] Foust, T.D; Wooley, R; Sheehan, J.; Wallace, R.; Ibsen, K.; Dayton, D.; Himmel, M.; Ashworth, J.; McCormick, R.; Melendez, M.; Hess, J.R.; Kenney, K.; Wright, C.; Radtke, C.; Perlack, R.; Mielenz, J.; Wang, M.; Synder, S.; Werpy, T. *A National Laboratory Market and Technology Assessment of the 30x30 Scenario*. NREL/TP-510-40942. Golden, CO: National Renewable Energy Laboratory, March 2007. http://www.nrel.gov/docs/fy07osti/40942.pdf.

[27] Office of the Biomass Program. *Biomass Multi-Year Program Plan March 2008*. Washington, DC: Office of the Biomass Program, Energy Efficiency and Renewable Energy, U.S. Department of Energy, March 2008. New revision forthcoming in 2009. http://www1.eere.energy.gov/biomass/pdfs/biomass_program_mypp.pdf

[28] Mann, M.K.; Spath, P.L. *Life Cycle Assessment of a Biomass Gasification Combined-Cycle Power System*. TP-430-23076. Golden, CO: National Renewable Energy Laboratory, 1997. http://www.nrel.gov/docs/legosti/fy98/23076.pdf.

[29] Kumar, S.; Agrawal, M.; Kumar, S.; Jilani, S. "The Production of Syngas by Dry Reforming in Membrane Reactor Using Alumina-Supported Rh Catalyst: A Simulation Study." *International Journal of Chemical Reactor Engineering*; Vol. 6: A109, 2008. http://www.bepress.com/ijcre/vol6/A109.

[30] Ravi, G.; Gupta, S.K.; Viswanathan, S.; Ray, M.B. "Optimization of Venturi Scrubbers Using Genetic Algorithm." *Ind. Eng. Chem. Res.*; Vol. 41, No.12, 2002; pp. 2988-3002.

[31] Nexant Inc. *Equipment Design and Cost Estimation for Small Modular Biomass Systems, Synthesis Gas Cleanup, and Oxygen Separation Equipment, Task 2: Gas Cleanup Design and Cost Estimates – Wood Feedstock*. NREL/SR-510-39945. Work performed by Nexant Inc., San Francisco, CA. Golden, CO: National Renewable Energy Laboratory, May 2006. http://www.nrel.gov/docs/fy06osti/39945.pdf.

[32] Gas Processors Suppliers Association. *Engineering Data Book*. FPS Version, 12th edition. Tulsa, OK: Gas Processors Suppliers Association, 2004.

[33] Nexant Inc. *Equipment Design and Cost Estimation for Small Modular Biomass Systems, Synthesis Gas Cleanup, and Oxygen Separation Equipment, Task 9: Mixed Alcohols From Syngas — State of Technology*. NREL/SR-510-39947. Work performed by Nexant Inc., San Francisco, CA. Golden, CO: National Renewable Energy Laboratory, May 2006. http://www.nrel.gov/docs/fy06osti/39947.pdf.

[34] Herman, R.G. "Classical and Non-classical Routes for Alcohol Synthesis." Chapter 7. Guczi, L., ed. *New Trends in CO Activation*. New York: Elsevier, 1991; pp. 265-349.

[35] Dayton, D. Email correspondence between David Dayton, NREL, and Mark Jones, Dow Chemical. National Renewable Energy Laboratory, Golden, CO, January 19, 2007.

[36] Forzatti, P.; Tronconi, E.; Pasquon, I. "Higher Alcohol Synthesis." *Catalysis Reviews – Science and Engineering;* Vol. 33(1-2), 1991; pp. 109-168.

[37] Hamelinck, C.; Faaij, A.P.C.; den Uil, H.; Boerrigter, H. *Production of FT Transportation Fuels from Biomass; Technical Options, Process Analysis and Optimisation, and Development Potential.* Utrecht, the Netherlands: Utrecht University, Copernicus Institute, March 2003. ISBN 90-393-3342-4.

[38] Quarderer, G.J. "Mixed Alcohols from Synthesis Gas." *Proceedings from the 78th Spring National AIChE Meeting, April 6-10, 1986, New Orleans, LA*.

[39] Nirula, S. *Dow/Union Carbide Process for Mixed Alcohols from Syngas*. PEP Review No. 85-1-4. Menlo Park, CA: SRI International, March 1986.

[40] Park, T.; Nam, I; Kim, Y. "Kinetic Analysis of Mixed Alcohol Synthesis from Syngas over K/MoS_2 Catalyst." *Ind. Eng. Chem. Res.;* Vol 36, 1997; pp. 5246-5257.

[41] Gunturu, A.K.; Kugler, E.L.; Cropley, J.B.; Dadyburjor, D.B. "A Kinetic Model for the Synthesis of High-Molecular-Weight Alcohols over a Sulfided Co-K-Mo/C Catalyst." *Ind. Eng. Chem. Res.;* Vol. 37, 1998; pp. 2107-2115.

[42] Smith, K.J.; Herman, R.G.; Klier, K. "Kinetic Modeling of Higher Alcohol Synthesis over Alkali-Promoted Cu/ZnO and MoS_2 Catalysts." *Chemical Engineering Science*; Vol. 45 (8), 1990; pp. 2639-2646.

[43] Tijmensen, M.; Faaij, A.; Hamelinck, C; Hardeveld, M. "Exploration of the Possibilities for Production of Fischer Tropsch Liquids and Power via Biomass Gasification." *Biomass and Bioenergy;* Vol. 23, 2002; pp. 129-152.

[44] West Virginia University Chemical Engineering Department. "Large-scale Process Design Projects: Air Separation into Oxygen, Nitrogen and Argon." http://www.che.cemr.wvu.edu/publications/projects/large_proj/air.PDF. Accessed June 1, 2009.

[45] American Water Works Association, American Society of Civil Engineers. *Water Treatment Plant Design*. 3rd edition. New York: McGraw Hill, 1997.

[46] Smith, A.R.; Klosek, J. "A Review of Air Separation Technologies and their Integration with Energy Conversion Processes." *Fuel Processing Technology*; Vol 79, 2001; pp. 115-134.

[47] Keeney, D.; Muller, M. *Water Use by Ethanol Plants: Potential Challenges*. Minneapolis, MN: The Institute for Agriculture and Trade Policy, October 2006. http://www.iatp.org/iatp/publications.cfm?accountID=258&refID=89449.

[48] Aden, A. "Water Usage for Current and Future Ethanol Production." *Southwest Hydrology*; September/October 2007; pp. 22-23.

[49] Spath, P.; Aden, A.; Eggeman, T.; Ringer, M.; Wallace, B.; Jechura, J. *Biomass to Hydrogen Production Detailed Design and Economics Utilizing the Battelle Columbus Laboratory Indirectly-Heated Gasifier*. NREL/TP-510-37408. Golden, CO: National Renewable Energy Laboratory, May 30, 2005. http://www.nrel.gov/docs/fy05osti/37408.pdf.

[50] Peters, M.S.; Timmerhaus, K.D. *Plant Design and Economics for Chemical Engineers*. 5th edition. New York: McGraw-Hill, Inc., 2003.

[51] Breault, R.; Morgan, D. *Design and Economics of Electricity Production From An Indirectly-Heated Biomass Gasifier.* Report TR4533-049-92. Columbus, OH: Battelle Columbus Laboratory, 1992.

[52] Paisley, M. Dravo Engineering Companies, Gasification Capital Cost Estimation, 1987. Obtained from Mark Paisley, Battelle Columbus Laboratory, August 1994.

[53] Weyerhaeuser; Nexant; Stone & Webster. *Biomass Gasification Combined Cycle*. DOE/DE-FC36-96GO10173. Work performed by Weyerhaeuser Company, Tacoma, WA. Washington, DC: U.S. Department of Energy, 2000.

[54] Stone & Webster; Weyerhaeuser; Amoco; Carolina Power & Light. *New Bern Biomass to Energy Project - Phase 1: Feasibility Study*. NREL/TP-421-7942. Work performd by Stone & Webster, Weyerhauser, Amoco, and Carolina Power & Light in response to NREL Contract No. LOI No. RCA-3-13326. Golden, CO: National Renewable Energy Laboratory, June 1995.

[55] Wan, E. I.; Malcolm D. F. "Economic Assessment of Advanced Biomass Gasification Systems," in Klass, D.L., ed. *Energy from Biomass and Wastes XIII.* Chicago: Institute of Gas Technology, 1990; pp.791-827.

[56] Paisley, M. Weyerhaeuser, Gasification Capital Cost Estimation, 1992. Obtained from Mark Paisley, Battelle Columbus Laboratory, August 1994.

[57] Wright, J.; Feinberg, D. *A Comparison of the Production of Methanol and Ethanol from Biomass*. Report prepared for Contract No. 23218-1-9201/01-SQ. Paris, France: International Energy Agency, 1993.

[58] Craig, K. Electric Power Generation Cost - Version 1.11. Spreadsheet obtained from Kevin Craig, July 6, 1994.

[59] Fogler, H.S. *Elements of Chemical Reaction Engineering*. 2nd edition. Englewood Cliffs, NJ: Prentice Hall, 1992.

[60] Walas, S.M. *Chemical Process Equipment Selection and Design*. Newton, MA: Butterworth-Heinemann, 1988.

[61] Leiby, S.M. *Operations for Refinery Hydrogen.* SRI Report No. 212. Menlo Park, CA: SRI International, 1994.

[62] Aden, A.; Spath, P.; Atherton, B. *The Potential of Thermochemical Ethanol via Mixed Alcohols Production*. NREL Milestone Report. Golden, CO: National Renewable Energy Laboratory, September 30, 2005. http://devafdc.nrel.gov/bcfcdoc/9432.pdf.

[63] Jeakel, D. Price quote from AGSCO for super sacks or bulk, obtained 2004.

[64] *Chemical Marketing Reporter*. (2004). August 23-30 issues.

[65] Chem Systems. *Biomass to Ethanol Process Evaluation*. Report prepared for NREL by Chem Systems, Tarrytown, NY, 1994.

[66] Energy Information Administration (EIA). "Petroleum Marketing Monthly, 2003." Official Energy Statistics from the U.S. Government. http://www.eia.doe.gov/pub/oil_gas/petroleum/data_publications/petroleum_marketing_monthly/current/pdf/pmmtab16.pdf.

[67] Graubard, D. Personal correspondence. Gas Technology Products LLC, Schaumburg, IL, 2004.

[68] East Bay Municipal Utility District. Wastewater Rates, Charges and Fees, 2004. East Bay Municipal Utility District Web site, http://www.ebmud.com/wastewater/industrial_&_commercial_permits_&_fees/wastewater_rates/default.htm#non-residential%20rates.

[69] SRI International. *PEP Yearbook International*. Volume 1E. Menlo Park, CA: SRI International, 2003.

[70] Baker, Thomsen Associates Insurance Services Inc. (BTA), *Salary Expert ePro©, www.salaryexpert.com, 2004.*

[71] Energy Information Administration (EIA). "Petroleum" Based on historical wholesale prices found on the Energy Information Administration Web site, Official Energy Statistics from the U.S. Government, http://www.eia.doe.gov/oil_gas/petroleum/info_glance/petroleum.html.

Appendix A

List of Acronyms

ASME	American Society of Mechanical Engineers
BCL	Battelle Columbus Laboratory
BFW	Boiler Feed Water
bpd	Barrels per day
BTU	British Thermal Unit
CFM	Cubic Feet per Minute
CH_4	Methane
CIP	Clean-in-place
CO	Carbon Monoxide
Co	Cobalt
CO_2	Carbon Dioxide
DCFROR	Discounted Cash Flow Rate of Return
DOE	U.S. Department of Energy
EIA	Energy Information Administration
EtOH	Ethanol
FT	Fischer-Tropsch
FY	Fiscal Year
GHSV	Gas Hourly Space Velocity
GJ	GigaJoule
gpm	Gallons per minute
GTI	Gas Technology Institute
H_2	Hydrogen
HAS	Higher Alcohol Synthesis
HHV	Higher Heating Value
IFP	Institut Francais du Petrole
IGT	Institute of Gas Technology (now GTI)
IRR	Internal Rate of Return
kWh	Kilowatt-hour
LHV	Lower Heating Value
MA	Mixed Alcohols
MASP	Minimum alcohols selling price
MeOH	Methanol
MESP	Minimum ethanol selling price
MoS_2	Molybdenum disulfide
MTBE	Methyl Tertiary-Butyl Ether
MW	Megawatt
MYPP	Multi-Year Program Plan
NREL	National Renewable Energy Laboratory
NRTL	Non-Random Two-Liquid activity coefficient method
OBP	Office of the Biomass Program
PFD	Process flow diagram
PEFI	Power Energy Fuels, Inc.
PNNL	Pacific Northwest National Laboratory
PPMV	Parts per million by volume
psia	Pounds per square inch (absolute)
RKS-BM	Redlich-Kwong-Soave equation of state with Boston-Mathius modifications
SEHT	Snamprogetti, Enichem and Haldor Topsoe
SMR	Steam Methane Reformer
TC EtOH	Thermochemical Ethanol
tpd	Short tons per day
TPI	Total Project Investment
UCC	Union Carbide Corporation
WGS	Water Gas Shift
WRI	Western Research Institute
WWT	Wastewater Treatment

Appendix B

NREL Biorefinery Design Database Description and Summary

NREL's Process Engineering Team has developed a database of primary information on all of the equipment in the benchmark model. This database contains information about the cost, reference year, scaling factor, scaling characteristic, design information and back-up cost referencing. The information is stored in a secure database and can be directly linked to the economic portion of the model. In addition to having all of the cost information used by the model, it has the ability to store documents pertaining to the piece of equipment. These include sizing and costing calculations and vendor information when available.

The following summarizes the important fields of information contained in the database. A partial listing of the information is attached for each piece of equipment. Additional information from the database is contained in the equipment cost listing in Appendix C.

Equipment Number:[AB]	Unique identifier, the first letter indicates the equipment type and the first number represents the process area, e.g., P-301 is a pump in Area 300
Equipment Name:[AB]	Descriptive name of the piece of equipment
Associated PFD:	PFD number on which the piece of equipment appears, e.g., PFD-P800-A101
Equipment Category:[A]	Code indicating the general type of equipment, e.g., PUMP
Equipment Type:[A]	Code indicating the specific type of equipment, e.g., CENTRIFUGAL for a pump
Equipment Description:[A]	Short description of the size or characteristics of the piece of equipment, e.g., 20 gpm, 82 ft head for a pump
Number Required:[B]	Number of duplicate pieces of equipment needed
Number Spares:[B]	Number of on-line spares
Scaling Stream:[B]	Stream number or other characteristic variable from the ASPEN model by which the equipment cost will be scaled
Base Cost:[B]	Equipment cost
Cost Basis:[A]	Source of the equipment cost, e.g., ICARUS or VENDOR
Cost Year:[B]	Year for which the cost estimate is based
Base for Scaling:[B]	Value of the scaling stream or variable used to obtain the base cost of the equipment
Base Type:	Type of variable used for scaling, e.g., FLOW, DUTY, etc.
Base Units:	Units of the scaling stream or variable, e.g., KG/HR, CAL/S
Installation Factor:[B]	Value of the installation factor. Installed Cost = Base Cost x Installation Factor
Installation Factor Basis:	Source of the installation factor value, e.g., ICARUS, VENDOR
Scale Factor Exponent:[B]	Value of the exponential scaling equation
Scale Factor Basis:	Source of the scaling exponent value, e.g., GARRETT, VENDOR
Material of Construction:[A]	Material of Construction
Notes:	Any other important information about the design or cost
Document:	Complete, multi-page document containing design calculations, vendor literature and quotations and any other important information. This is stored as an electronic document and can be pages from a spreadsheet other electronic sources or scanned information from vendors.
Design Date:	Original date for the design of this piece of equipment
Modified Date:	The system automatically marks the date in this field whenever any field is changed

[A] These fields are listed for all pieces of equipment in this Appendix.
[B] These fields are part of the equipment cost listing in Appendix C.

EQUIPMENT_NU	EQUIPMENT_NAME	EQUIPMENT_CATEGO	EQUIPMENT_TYPE	EQUIPMENT_DESCRIPTION	MATERIAL_CONS	COST_BASIS
PFD-P810-A101-2						
C-101	Hopper Feeder	CONVEYOR	VIBRATING-FEEDER	Included in overall cost for feed handling & drying taken from several literature sources	CS	LITERATURE
C-102	Screener Feeder Conveyor	CONVEYOR	BELT	Included in overall cost for feed handling & drying taken from several literature sources	CS	LITERATURE
C-103	Radial Stacker Conveyor	CONVEYOR	BELT	Included in overall cost for feed handling & drying taken from several literature sources	CS	LITERATURE
C-104	Dryer Feed Screw Conveyor	CONVEYOR	SCREW	Included in overall cost for feed handling & drying taken from several literature sources	CS	LITERATURE
C-105	Gasifier Feed Screw Conveyor	CONVEYOR	SCREW	Included in overall cost for feed handling & drying taken from several literature sources	316SS	LITERATURE
H-AP-1	Hot Flue gas /Cold AlcSepLtToRef Exchanger	HEATX	SHELL-TUBE	Fixed TS; area=12 ft^2; tube pres=550 psig; tube temp=1400F; shell pres=30 psig; shell temp=1000F	316S/CS	Aspen IPE
H-AP-2	Hot Flue gas /Cold SteamSuperHt Exchanger	HEATX	SHELL-TUBE	Fixed TS; area=1050 ft^2; tube pres=1000 psig; tube temp=1050F; shell pres=55 psig; shell temp=1000F	316S/CS	Aspen IPE
H-AP-3	Hot Flue gas /Cold SteamGen Exchanger	HEATX	SHELL-TUBE	Fixed TS; area=35 ft^2; tube pres=1000 psig; tube temp=650F; shell pres=55 psig; shell temp=1000F	316S/CS	Aspen IPE
H-AP-4	Hot Flue gas /Cold WaterPreHt Exchanger	HEATX	SHELL-TUBE	Fixed TS; area=650 ft^2; tube pres=1000 psig; tube temp=700F; shell pres=55 psig; shell temp=1000F	316S/CS	Aspen IPE
K-101	Flue Gas Blower	FAN	CENTRIFUGAL	Included in overall cost for feed handling & drying taken from several literature sources	SS304	LITERATURE
M-101	Hydraulic Truck Dump with Scale	SCALE	TRUCK-SCALE	Included in overall cost for feed handling & drying taken from several literature sources		LITERATURE
M-102	Hammermill	SIZE-REDUCTION		Included in overall cost for feed handling & drying taken from several literature sources	CS	LITERATURE
M-103	Front End Loaders	VEHICLE	LOADER	Included in overall cost for feed handling & drying taken from several literature sources	CS	LITERATURE
M-104	Rotary Biomass Dryer	DRYER	ROTARY-DRUM	Included in overall cost for feed handling & drying taken from several literature sources	CS	LITERATURE
S-101	Magnetic Head Pulley	SEPARATOR	MAGNET	Included in overall cost for feed handling & drying taken from several literature sources	CS	LITERATURE
S-102	Screener	SEPARATOR	SCREEN	Included in overall cost for feed handling & drying taken from several literature sources	CS	LITERATURE
S-103	Dryer Air Cyclone	SEPARATOR	GAS CYCLONE	Included in overall cost for feed handling & drying taken from several literature sources	CS	LITERATURE
S-104	Dryer Air Baghouse Filter	SEPARATOR	FABRIC-FILTER	Included in overall cost for feed handling & drying taken from several literature sources		LITERATURE
T-101	Dump Hopper	TANK	LIVE-BTM-BIN	Included in overall cost for feed handling & drying taken from several literature sources	CS	LITERATURE
T-102	Hammermill Surge Bin	TANK	LIVE-BTM-BIN	Included in overall cost for feed handling & drying taken from several literature sources	CS	LITERATURE
T-103	Dryer Feed Bin	TANK	LIVE-BTM-BIN	Included in overall cost for feed handling & drying taken from several literature sources	CS	LITERATURE
T-104	Dried Biomass Hopper	TANK	VERTICAL-VESSEL	Included in overall cost for feed handling & drying taken from several literature sources	CS	LITERATURE
T-105	Lock Hopper	TANK	VERTICAL-VESSEL	Included in overall cost for feed handling & drying taken from several literature sources	CS	LITERATURE
T-106	Feed Hopper	TANK	LIVE-BTM-BIN	Included in overall cost for feed handling & drying taken from several literature sources	CS	LITERATURE
PFD-P810-A201						
C-201	Sand/ash Conditioner/Conveyor	CONVEYOR	SCREW	Included in overall cost for gasification & gas clean up taken from several literature sources	CS	LITERATURE
C-202	MgO Screw Conveyor	CONVEYOR	SCREW	Included in overall cost for gasification & gas clean up taken from several literature sources	CS	LITERATURE
C-203	Olivine Screw Conveyor	CONVEYOR	SCREW	Included in overall cost for gasification & gas clean up taken from several literature sources	CS	LITERATURE
M-201	Sand/ash Cooler	MISCELLANEOUS	MISCELLANEOUS	Included in overall cost for gasification & gas clean up taken from several literature sources		LITERATURE
R-201	Directly Heated Gasifier	REACTOR	VERTICAL-VESSEL	Included in overall cost for gasification & gas clean up taken from several literature sources	CS w/refractory	LITERATURE
S-201	Primary Gasifier Cyclone	SEPARATOR	GAS CYCLONE	Included in overall cost for gasification & gas clean up taken from several literature sources	CS w/refractory	LITERATURE
S-202	Secondary Gasifier Cyclone	SEPARATOR	GAS CYCLONE	Included in overall cost for gasification & gas clean up taken from several literature sources	CS w/refractory	LITERATURE
T-201	Sand/ash Bin	TANK	FLAT-BTM-STORAGE	Included in overall cost for gasification & gas clean up taken from several literature sources	CS	LITERATURE
PFD-P810-A301-10						
S-306	Tar Reformer Cyclone	SEPARATOR	GAS CYCLONE	Included in the cost of the tar reformer catalyst renegerator, R-204	CS	LITERATURE

EQUIPMENT_NU	EQUIPMENT_NAME	EQUIPMENT_CATEGO	EQUIPMENT_TYPE	EQUIPMENT_DESCRIPTION	MATERIAL_CONS	COST_BASIS
H-AP-5	Cold FCAirPreHt /Hot WaterBlwdn Exchanger	HEATX	SHELL-TUBE	Fixed TS; area=36 ft^2; tube pres=1000 psig; tube temp=700F; shell pres=55 psig; shell temp=550F	316S/CS	Aspen IPE
H-AP-6	Hot RefExhQuench /Cold SteamGen Exchanger	HEATX	SHELL-TUBE	Fixed TS; area=2350 ft^2; tube pres=1000 psig; tube temp=700F; shell pres=550 psig; shell temp=900F	CS/CS	Aspen IPE
H-AP-8	Hot RefExhQuench /Cold AlcSynPreHt Exchanger	HEATX	SHELL-TUBE	Fixed TS; area=10950 ft^2; tube pres=1100 psig; tube temp=700F; shell pres=550 psig; shell temp=800F	304S/CS	Aspen IPE
H-AP-10	Hot RefExhQuench /Cold RefBleedPreHt Exchanger	HEATX	SHELL-TUBE	Fixed TS; area=950 ft^2; tube pres=550 psig; tube temp=1300F; shell pres=550 psig; shell temp=900F	316S/A285C	Aspen IPE
H-BP-4	Cold FCAirPreHt /Hot Reformate Exchanger	HEATX	SHELL-TUBE	Fixed TS; area=5500 ft^2; tube pres=550 psig; tube temp=550F; shell pres=25 psig; shell temp=450F	CS/A214	Aspen IPE
H-BP-7	Cold RefBleedPreHt /Hot Reformate Exchanger	HEATX	SHELL-TUBE	Fixed TS; area=450 ft^2; tube pres=550 psig; tube temp=550F; shell pres=550 psig; shell temp=550F	CS/A214	Aspen IPE
H-BP-12	Cold Water /Hot Reformate Exchanger	HEATX	SHELL-TUBE	Fixed TS; area=800 ft^2; tube pres=550 psig; tube temp=450F; shell pres=50 psig; shell temp=450F	CS/A214	Aspen IPE
H-BP-13	Cold RefBleedPreHt /Hot Reformate Exchanger	HEATX	SHELL-TUBE	Fixed TS; area=550 ft^2; tube pres=550 psig; tube temp=450F; shell pres=550 psig; shell temp=450F	CS/A214	Aspen IPE
H-BP-15	Cold FCAirPreHt /Hot Reformate Exchanger	HEATX	SHELL-TUBE	Fixed TS; area=6000 ft^2; tube pres=550 psig; tube temp=450F; shell pres=50 psig; shell temp=450F	CS/A214	Aspen IPE
K-305	Regenerator Combustion Air Blower	FAN	CENTRIFUGAL	gas flow rate (actual) = 70133 CFM;	SS304	QUESTIMATE
K-313	Blower for Dryer Exhaust to Fuel Combustor	FAN	ROTARY BLOWER	gas flow rate (actual) = 100 CFM; gauge pressure = 4 psig	CS	Aspen IPE
R-303	Tar Reformer	REACTOR	VERTICAL-VESSEL	Included in overall cost for gasification & gas clean up taken from several literature sources	CS w/refractory	LITERATURE
R-301A	Tar Reformer Catalyst Regenerator	REACTOR	VERTICAL-VESSEL	Taken from literature source	CS w/refractory	LITERATURE
H-301	Quench Water Recirculation Cooler	HEATX	SHELL-TUBE	Included in overall cost for gasification & gas clean up taken from several literature sources	CS	LITERATURE
H-303	Water-cooled Aftercooler	HEATX	SHELL-TUBE	duty = 2.9 MMBtu/hr; LMTD = 25F; U = 150 Btu/hr-ft^2-F; surface area = 794 ft^2; fixed TS	SS304CS/A214	QUESTIMATE
H-301C-1	Pre-syngas water knockout, water-cooled exchanger	HEATX	SHELL-TUBE	Fixed TS; area=2800 ft^2; tube pres=550 psig; tube temp=250F; shell pres=100 psig; shell temp=150F	A214	Aspen IPE
H-306	Waste Water Cooler / Cooling Water	HEATX	SHELL-TUBE	Pre-engineered U-tube; area=50 ft^2; tube pres=550 psig; tube temp=400F; shell pres=100 psig; shell temp=150F	CS	Aspen IPE
M-300	Fuel Mixer for Combustor	MISCELLANEOUS	MISCELLANEOUS	Plumbing - included in installation factor		
M-300H	Mixer Prior to Tar Reformer	MISCELLANEOUS	MISCELLANEOUS	Plumbing - included in installation factor		
M-330	Mixer Prior to Reformate Quench	MISCELLANEOUS	MISCELLANEOUS	Plumbing - included in installation factor		
M-301	Syngas Quench Chamber	MISCELLANEOUS		Included in overall cost for gasification & gas clean up taken from several literature sources	CS	LITERATURE
M-302	Syngas Venturi Scrubber	MISCELLANEOUS		Included in overall cost for gasification & gas clean up taken from several literature sources	CS	LITERATURE
P-301	Sludge Pump	PUMP	CENTRIFUGAL	1.4 GPM; 0.053 brake HP; design pressure = 60 psia	CS	QUESTIMATE
P-302	Quench Water Recirculation Pump	PUMP	CENTRIFUGAL	Included in the cost of the gasification & gas clean up system	CS	LITERATURE
P-303	LO-CAT Absorbent Solution Circulating Pump	PUMP	CENTRIFUGAL	Included in LO-CAT system cost	304SS	VENDOR
S-301	Syngas Recycle Water Knockout Vessel	SEPARATOR	KNOCK-OUT DRUM	18 ft diameter; 36 ft height; design pres = 40 psia; design temp = 197 F	CS	QUESTIMATE
S-303	Pre-Amine System Knock-out	SEPARATOR	KNOCK-OUT DRUM	7 ft. diameter; 14 ft height; design pres = 506 psia; design temp = 160 F	CS	QUESTIMATE
T-301	Sludge Settling Tank	SEPARATOR	CLARIFIER	3 ft diameter; 7 ft height; 431 gal volume;	SS304	QUESTIMATE
T-302	Quench Water Recirculation Tank	TANK	HORIZONTAL-VESSEL	Included in overall cost for gasification & gas clean up taken from several literature sources	CS	LITERATURE
H-304-1	LO-CAT Preheater/Steam	HEATX	SHELL-TUBE	Pre-engineered U-tube; area=18 ft^2; tube pres=120 psig; tube temp=500F; shell pres=100 psig; shell temp=250F	CS	Aspen IPE
H-305	LO-CAT Absorbent Solution Cooler	HEATX	SHELL-TUBE	Included in LO-CAT system cost	304SS	VENDOR
K-302	LO-CAT Feed Air Blower	FAN	CENTRIFUGAL	Included in LO-CAT system cost	CS	VENDOR
K-373	Light-Ends for Alcohol Sep to Reformer Compressor	COMPRESSOR	CENTRIFUGAL	COPIED FROM K-414	A285C	QUESTIMATE
K-384	CO2 Recycle into Tar Reformer	COMPRESSOR	RECIPROCATING	gas flow rate (actual) = 130 CFM; inlet 11 psig, discharge 446 psig; inlet temp 149 F		Aspen IPE

EQUIPMENT_NU	EQUIPMENT_NAME	EQUIPMENT_CATEGO	EQUIPMENT_TYPE	EQUIPMENT_DESCRIPTION	MATERIAL_CONS	COST_BASIS
M-303	LO-CAT Venturi Precontactor	MISCELLANEOUS		Included in LO-CAT system cost	304SS	VENDOR
M-304	LO-CAT Liquid-filled Absorber	COLUMN	ABSORBER	Included in LO-CAT system cost	304SS	VENDOR
R-304	LO-CAT Oxidizer Vessel	REACTOR	VERTICAL-VESSEL	Included in LO-CAT system cost	304SS	VENDOR
S-310	L.P. Amine System	COLUMN	ABSORBER			OTHER
M-312A	Mixer In Syngas Quench Exchangers Train	MISCELLANEOUS	MISCELLANEOUS	Plumbing - included in installation factor		
SP-312B	Flow Split In Syngas Quench Exchangers Train	MISCELLANEOUS	MISCELLANEOUS	Plumbing - included in installation factor		
SP-330	Flow Split Before Reformer Exhaust Quench Exchangers	MISCELLANEOUS	MISCELLANEOUS	Plumbing - included in installation factor		
PFD-P810-A401-2						
K-410	Mixed Alcohol Gas Compressor	COMPRESSOR	CENTRIFUGAL	gas flow rate = 2,481 CFM; 4 impellers; design outlet pressure = 700 psi; 10,617 HP; intercoolers, aftercooler, & K.O.s included	A285C	QUESTIMATE
H-AP-9	Hot RefExhQuench /Cold AlcSynUnRxToRef Exchanger	HEATX	SHELL-TUBE	Fixed TS; area=25600 ft^2; tube pres=1000 psig; tube temp=1250F; shell pres=550 psig; shell temp=900F	316S/CS	Aspen IPE
H-AP-11	Hot Alc.Rx.Exh. /Cold WaterPreHt Exchanger	HEATX	SHELL-TUBE	Fixed TS; area=3500 ft^2; tube pres=1000 psig; tube temp=550F; shell pres=1100 psig; shell temp=800F	CS/CS	Aspen IPE
H-AP-12	Hot WaterBlwdn /Cold WaterPreHt Exchanger	HEATX	SHELL-TUBE	Fixed TS; area=150 ft^2; tube pres=1000 psig; tube temp=550F; shell pres=1000 psig; shell temp=800F	CS/CS	Aspen IPE
H-BP-1	Hot Reformate /Cold AlcSynPreHt Exchanger	HEATX	SHELL-TUBE	Fixed TS; area=4400 ft^2; tube pres=1100 psig; tube temp=450F; shell pres=550 psig; shell temp=450F	CS/A214	Aspen IPE
H-BP-5	Hot Reformate /Cold AlcSynUnRx Exchanger	HEATX	SHELL-TUBE	Fixed TS; area=3000 ft^2; tube pres=1100 psig; tube temp=550F; shell pres=550 psig; shell temp=550F	CS/A214	Aspen IPE
H-BP-10	Hot Reformate /Cold AlcSynPreHt Exchanger	HEATX	SHELL-TUBE	Fixed TS; area=2100 ft^2; tube pres=1100 psig; tube temp=450F; shell pres=550 psig; shell temp=450F	CS/A214	Aspen IPE
H-BP-14	Hot Reformate /Cold AlcSynUnRx Exchanger	HEATX	SHELL-TUBE	Fixed TS; area=3300 ft^2; tube pres=1100 psig; tube temp=450F; shell pres=550 psig; shell temp=450F	CS/A214	Aspen IPE
H-BP-17	Hot Alc.Rx.Exh. /Cold Water Exchanger	HEATX	SHELL-TUBE	Fixed TS; area=2100 ft^2; tube pres=1000 psig; tube temp=450F; shell pres=1100 psig; shell temp=550F	CS/A214	Aspen IPE
K-412	Purge Gas Expander	COMPRESSOR	CENTRIFUGAL	gas flow rate = 144 CFM; design outlet pressure =25 psi; 2740 HP	A285C	QUESTIMATE
K-414A	Mixed Alcohol Recycle Gas Compressor	COMPRESSOR	RECIPROCATING	gas flow rate = 0.05 CFM; inlet pres 958 psig; outlet pres 979 psig; temp 110 F	A285C	Aspen IPE
H-414-1	Mixed Alcohol Condenser	HEATX	SHELL-TUBE	Fixed TS; area=1200 ft^2; tube pres=1100 psig; tube temp=250F; shell pres=100 psig; shell temp=150F	A214	Aspen IPE
H-413	Mixed Alcohol first Condenser (air cooled)	HEATX	AIR-COOLED EXCHANGER			
S-501	Mixed Alcohols Condensation Knock-out	SEPARATOR	KNOCK-OUT DRUM	H/D = 2; 5 ft diam; 9 ft height; operating pressure = 1993 psia; operating temperature = 110 F	A-515	QUESTIMATE
R-410	Mixed Alcohol Reactor	REACTOR	VERTICAL-VESSEL	Fixed Bed Synthesis Reactor with MoS2-based catalyst. Sized from hourly space velocity of 3000 (hr-1)	CS w/refractory	QUESTIMATE
SP-470	Flow Split Before Alc.Syn. Below Pinch Exchangers	MISCELLANEOUS	MISCELLANEOUS	Plumbing - included in installation factor		
M-470A	Mixer After Alc.Syn. Below Pinch Exchangers	MISCELLANEOUS	MISCELLANEOUS	Plumbing - included in installation factor		
PFD-P810-A501-2						
H-513	Mol Sieve Flush Condenser (air cooled)	HEATX	AIR-COOLED EXCHANGER			
H-504C	D-504 condenser (air cooled)	HEATX	AIR-COOLED EXCHANGER			
H-505C	D-505 condenser (air cooled)	HEATX	AIR-COOLED EXCHANGER			
M-500B	Mol-Sieve Off Gas Mixer	MISCELLANEOUS	MISCELLANEOUS	Plumbing - included in installation factor		
S-503	Molecular Sieve (9 pieces)	MISCELLANEOUS	PACKAGE	Superheater, twin mole sieve columns, product cooler, condenser, pumps, vacuum source.	SS	VENDOR
S-502	LP Syngas Separator	SEPARATOR	KNOCK-OUT DRUM			
D-504	Ethanol/Propanol Splitter	COLUMN	DISTILLATION			
D-505	Methanol/Ethanol Splitter	COLUMN	DISTILLATION			

EQUIPMENT_NU	EQUIPMENT_NAME	EQUIPMENT_CATEGO	EQUIPMENT_TYPE	EQUIPMENT_DESCRIPTION	MATERIAL_CONS	COST_BASIS
H-504R	Ethanol/Propanol Splitter Reboiler	HEATX	SHELL-TUBE			
H-505R	Methanol/Ethanol Splitter Reboiler	HEATX	SHELL-TUBE			
P-504B	Ethanol/Propanol Splitter Bottoms Pump	PUMP	CENTRIFUGAL			
P-505B	Methanol/Ethanol Splitter Bottoms Pump	PUMP	CENTRIFUGAL			
P-504R	Ethanol/Propanol Splitter Reflux Pump	PUMP	CENTRIFUGAL			
P-505R	Methanol/Ethanol Splitter Reflux Pump	PUMP	CENTRIFUGAL			
T-504	Ethanol/Propanol Splitter Reflux Drum	TANK	KNOCK-OUT DRUM			
T-505	Methanol/Ethanol Splitter Reflux Drum	TANK	KNOCK-OUT DRUM			
P-590	Mixed Alcohol Product Pump	PUMP	CENTRIFUGAL			
P-592	Ethanol Product Pump	PUMP	CENTRIFUGAL			
P-591	Mixed Alcohol Product Pump	PUMP	CENTRIFUGAL			
P-593	Ethanol Product Pump	PUMP	CENTRIFUGAL			
H-592-1	Ethanol Product Cooler (air cooled)	HEATX	AIR-COOLED EXCHANGER			
H-590-1	Mixed Alcohol Product Cooler (air cooled)	HEATX	AIR-COOLED EXCHANGER			
H-591-1	Higher Alcohol Product Finishing cooler	HEATX	SHELL-TUBE	Pre-engineered U-tube; area=40 ft^2; tube pres=100 psig; tube temp=300F; shell pres=100 psig; shell temp=150F	CS	Aspen IPE
H-593-1	ETHANOL Product Finishing cooler	HEATX	SHELL-TUBE	Fixed TS; area=240 ft^2; tube pres=100 psig; tube temp=300F; shell pres=100 psig; shell temp=150F	CS	Aspen IPE
H-BP-2	Cold MolSievPreHt /Hot Reformate Exchanger	HEATX	SHELL-TUBE	Fixed TS; area=900 ft^2; tube pres=550 psig; tube temp=550F; shell pres=80 psig; shell temp=450F	CS/A214	Aspen IPE
H-BP-3	Cold MolSievPreHt /Hot Reformate Exchanger	HEATX	SHELL-TUBE	Fixed TS; area=230 ft^2; tube pres=550 psig; tube temp=550F; shell pres=75 psig; shell temp=450F	CS/A214	Aspen IPE
H-BP-16	Cold MolSievPreHt /Hot Reformate Exchanger	HEATX	SHELL-TUBE	Fixed TS; area=5000 ft^2; tube pres=550 psig; tube temp=450F; shell pres=80 psig; shell temp=450F	CS/A214	Aspen IPE
T-592	Ethanol Product Storage Tank	TANK	FLAT-BTM-STORAGE			
T-590	Mixed Alcohol Product Storage Tank	TANK	FLAT-BTM-STORAGE			
PFD-P810-A601-3						
H-601	Steam Turbine Condenser	HEATX	SHELL-TUBE	Included in the cost of the steam trubine/generator (M-602); condenser steam flow rate = 342,283 lb/hr		ADEN, ET. AL. 2002
H-603	Blowdown Water-cooled Cooler	HEATX	SHELL-TUBE	duty = 0.6 MMBtu/hr; LMTD = 47 F; U = 225 Btu/hr-ft^2-F; area = 60 ft^2; fixed TS	A214	QUESTIMATE
H-BP-6	Hot Reformate /Cold Water Exchanger	HEATX	SHELL-TUBE	Fixed TS; area=7500 ft^2; tube pres=1000 psig; tube temp=550F; shell pres=550 psig; shell temp=550F	CS/A214	Aspen IPE
H-BP-8	Cold Water /Hot Reformate Exchanger	HEATX	SHELL-TUBE	Fixed TS; area=80 ft^2; tube pres=550 psig; tube temp=450F; shell pres=50 psig; shell temp=450F	CS/A214	Aspen IPE
H-BP-9	Cold Water /Hot Reformate Exchanger	HEATX	SHELL-TUBE	Fixed TS; area=350 ft^2; tube pres=550 psig; tube temp=450F; shell pres=50 psig; shell temp=450F	CS/A214	Aspen IPE
H-BP-11	Hot Reformate /Cold WaterRecy Exchanger	HEATX	SHELL-TUBE	Fixed TS; area=2000 ft^2; tube pres=550 psig; tube temp=450F; shell pres=550 psig; shell temp=450F	CS/A214	Aspen IPE
M-601	Hot Process Water Softener System	MISCELLANEOUS	PACKAGE	scaled cost to 700 gpm flow, 24" dia softener. Includes filters, chemical feeders, piping, valves		RICHARDSON
M-602	Extraction Steam Turbine/Generator	GENERATOR	STEAM-TURBINE	25.6 MW generated; 34,308 HP		VENDOR
P-601	Collection Pump	PUMP	CENTRIFUGAL	513 GPM; 4 brake HP; outlet pressure = 25 psia	CS	QUESTIMATE
P-602	Condensate Pump	PUMP	CENTRIFUGAL	190 GPM; 4 brake HP; outlet pressure = 25 psia	SS304	QUESTIMATE
P-603	Deaerator Feed Pump	PUMP	CENTRIFUGAL	702 GPM; 14 brake HP; outlet pressure = 40 psia	CS	QUESTIMATE
P-604	Boiler Feed Water Pump	PUMP	CENTRIFUGAL	730 GPM; 759 brake HP; outlet pressure = 1,345 psia	CS	QUESTIMATE
T-601	Condensate Collection Tank	TANK	HORIZONTAL-VESSEL	residence time = 10 minutes; H/D = 2; 8 ft diameter; 17 ft height	CS	QUESTIMATE

EQUIPMENT_NU	EQUIPMENT_NAME	EQUIPMENT_CATEGO	EQUIPMENT_TYPE	EQUIPMENT_DESCRIPTION	MATERIAL_CONS	COST_BASIS
T-602	Condensate Surge Drum	TANK	HORIZONTAL-VESSEL	residence time = 10 minutes; H/D = 2; 9 ft diameter; 17 ft height	CS	QUESTIMATE
T-603	Deaerator	TANK	HORIZONTAL-VESSEL	liquid flow rate = 348,266 lb/hr; 150 psig design pressure; 10 min residence time	CS;SS316	VENDOR
T-604	Steam Drum	TANK	HORIZONTAL-VESSEL	424 gal, 4.5' x 4'dia, 15 psig	CS	ICARUS
S-601	Blowdown Flash Drum	TANK	HORIZONTAL-VESSEL	H/D = 2; residence time = 5 min; 2 ft diameter; 4 ft height; op press = 1,280 psi; op temp = 575 F	CS	QUESTIMATE
PFD-P810-A701-2						
K-701	Plant Air Compressor	COMPRESSOR	RECIPROCATING	450 cfm, 125 psig outlet	CS	ICARUS
M-701	Cooling Tower System	COOLING-TOWER	INDUCED-DRAFT	approx 16,500 gpm, 140 MMBtu/hr	FIBERGLASS	DELTA-T98
M-702	Hydraulic Truck Dump with Scale	SCALE	TRUCK-SCALE	Hydraulic Truck Dumper with Scale	CS	VENDOR
M-703	Flue Gas Stack	MISCELLANEOUS	MISCELLANEOUS	42 inch diameter; 250 deg F	A515	QUESTIMATE
P-701	Cooling Water Pump	PUMP	CENTRIFUGAL	16,188 GPM; 659 brake HP; outlet pressure 75 psi	CS	QUESTIMATE
P-702	Firewater Pump	PUMP	CENTRIFUGAL	2,500 gpm, 50 ft head	CS	ICARUS
P-703	Diesel Pump	PUMP	CENTRIFUGAL	30 gpm, 150 ft head	CS	ICARUS
P-704	Ammonia Pump	PUMP	CENTRIFUGAL	8.5 gpm, 22 ft head	CS	ICARUS
P-705	Hydrazine Pump	PUMP	CENTRIFUGAL	5 gpm, 75 ft head	CS	DELTA-T98
S-701	Instrument Air Dryer	DRYER	PACKAGE	400 SCFM Air Dryer, -40 F Dewpoint	CS	RICHARDSON
T-701	Plant Air Receiver	TANK	HORIZONTAL-VESSEL	900 gal., 200 psig	CS	ICARUS
T-702	Firewater Storage Tank	TANK	FLAT-BTM-STORAGE	600,000 gal, 4 hr res time, 51' dia x 40' high, atmospheric	A285C	ICARUS
T-703	Diesel Storage Tank	TANK	FLAT-BTM-STORAGE	10,667 gal, 120 hr res time, 90% wv, 10' dia x 18.2' high, atmospheric	A285C	ICARUS
T-704	Ammonia Storage Tank	TANK	HORIZONTAL-STORAGE	Included in the cost of the feed handling step.	A515	ICARUS
T-705	Olivine Lock Hopper	TANK	VERTICAL-VESSEL	Included in the cost of the feed handling step.	CS	DELTA-T98
T-706	MgO Lock Hopper	TANK	VERTICAL-VESSEL	20' x 20' Bin, Tapering to 3' x 3' at Bottom. Capacity 6,345 cf, two truck loads.	CS	DELTA-T98
T-707	Hydrazine Storage Tank	TANK	VERTICAL-VESSEL	260 gal, 4.9' x 3'dia., 10psig	SS316	ICARUS
PFD-P810-A801						
H-802N	N2-compressor water cooled aftercooler	HEATX	SHELL-TUBE	duty = 0.3 MMBtu/hr; LMTD = 25 F; U = 150 Btu/hr-ft^2-F; area = 74 ft^2; fixed TS	A214	QUESTIMATE
K-802N	post ASU N2 compressor	COMPRESSOR	CENTRIFUGAL	Centrifugal compr - horiz.l; gas flow rate (actual) = 2042 CFM, design inlet pres = 46 psig; design outlet pres = 440 psig	CS	Aspen IPM
M-802	Air Separation Unit (ASU) including air compressor	MISCELLANEOUS	MISCELLANEOUS	Biomass and Bioenergy 23 (2002) 129-152, Tijmensen		LITERATURE
S-801N	Pre N2-compressor KO	SEPARATOR	KNOCK-OUT DRUM	3 ft diameter; 35ft height; design pres = 91 psia; design temp = 123 F	CS	QUESTIMATE
S-802N	Post N2-compressor KO	SEPARATOR	KNOCK-OUT DRUM	3 ft diameter; 6 ft height; design pres = 468 psia; design temp = 160 F	CS	QUESTIMATE
K-802	post ASU O2 compressor	COMPRESSOR	CENTRIFUGAL	Centrifugal compr - horiz.; gas flow rate (actual)=1530CFM, design inlet pres=57 psig; design outlet pres=430 psig; max interstage temp=400 F	CS	Aspen IPM
S-803	Pre O2-compressor KO	SEPARATOR	KNOCK-OUT DRUM	3 ft diameter; 35ft height; design pres = 91 psia; design temp = 123 F	CS	QUESTIMATE

Appendix C

Individual Equipment Cost Summary

Equipment Number	Number Required	Number Spares	Equipment Name	Scaling Stream	Scaling Stream Flow (lb/hr or btu/hr)	New Stream Flow	Size Ratio	Original Equip Cost (per unit)	Base Year	Total Original Equip Cost (Req'd & Spare) in Base Year	Scaling Exp.	Scaled Cost in Base Year	Instal Factor	Installed Cost in Base Year	Installed Cost in 2005$	Scaled Uninstalled Cost in 2005$	Installed Cost in 2007$	Scaled Uninstalled Cost in 2007$
C-101	4		Hopper Feeder	STRM.A100.101	367,437	367,437	1.00	$0	2002	$0	0.75	$0	2.47	$0	$0	$0	$0	$0
C-102	2		Screener Feeder Conveyor	STRM.A100.101	367,437	367,437	1.00	$0	2002	$0	0.75	$0	2.47	$0	$0	$0	$0	$0
C-103	2		Radial Stacker Conveyor	STRM.A100.101	367,437	367,437	1.00	$0	2002	$0	0.75	$0	2.47	$0	$0	$0	$0	$0
C-104	2		Dryer Feed Screw Conveyor	STRM.A100.101	367,437	367,437	1.00	$0	2002	$0	0.75	$0	2.47	$0	$0	$0	$0	$0
C-105	2		Gasifier Feed Screw Conveyor	STRM.A100.104	208,771	193,388	0.93	$0	2002	$0	0.75	$0	2.47	$0	$0	$0	$0	$0
H-AP-1	1		Hot Flue gas /Cold AlcSepLtToRef Exchanger	PINCH	1,100,472	1,100,472	1.00	$23,723	2006	$23,723	0.65	$23,723	2.47	$58,596	$54,913	$22,232	$61,622	$24,948
H-AP-2	1		Hot Flue gas /Cold SteamSuperHt Exchanger	PINCH	109,947,990	109,947,990	1.00	$103,115	2006	$103,115	0.65	$103,115	2.47	$254,694	$238,686	$96,634	$267,847	$108,440
H-AP-3	1		Hot Flue gas /Cold SteamGen Exchanger	PINCH	4,689,295	4,689,295	1.00	$24,123	2006	$24,123	0.65	$24,123	2.47	$59,584	$55,839	$22,607	$62,661	$25,369
H-AP-4	1		Hot Flue gas /Cold WaterPreHt Exchanger	PINCH	80,143,108	80,143,108	1.00	$72,115	2006	$72,115	0.65	$72,115	2.47	$178,124	$166,929	$67,583	$187,323	$75,839
K-101	2		Flue Gas Blower	STRM.114	639,530	881,793	1.38	$0	2002	$0	0.75	$0	2.47	$0	$0	$0	$0	$0
M-101	4		Hydraulic Truck Dump with Scale	STRM.A100.101	367,437	367,437	1.00	$0	2002	$0	0.75	$0	2.47	$0	$0	$0	$0	$0
M-102	2		Hammermill	STRM.A100.101	367,437	367,437	1.00	$0	2002	$0	0.75	$0	2.47	$0	$0	$0	$0	$0
M-103	3		Front End Loaders	STRM.A100.101	367,437	367,437	1.00	$0	2002	$0	0.75	$0	2.47	$0	$0	$0	$0	$0
M-104	2		Rotary Biomass Dryer	STRM.A100.101	367,437	367,437	1.00	$3,813,728	2002	$7,627,455	0.75	$7,627,450	2.47	$18,839,801	$22,297,257	$9,027,230	$25,021,313	$10,130,086
S-101	2		Magnetic Head Pulley	STRM.A100.101	367,437	367,437	1.00	$0	2002	$0	0.75	$0	2.47	$0	$0	$0	$0	$0
S-102	2		Screener	STRM.A100.101	367,437	367,437	1.00	$0	2002	$0	0.75	$0	2.47	$0	$0	$0	$0	$0
S-103	2		Dryer Air Cyclone	STRM.A100.110	639,530	890,700	1.39	$0	2002	$0	0.75	$0	2.47	$0	$0	$0	$0	$0
S-104	2		Dryer Air Baghouse Filter	STRM.A100.103	208,771	193,388	0.93	$0	2002	$0	0.75	$0	2.47	$0	$0	$0	$0	$0
T-101	4		Dump Hopper	STRM.A100.101	367,437	367,437	1.00	$0	2002	$0	0.75	$0	2.47	$0	$0	$0	$0	$0
T-102	1		Hammermill Surge Bin	STRM.A100.101	367,437	367,437	1.00	$0	2002	$0	0.75	$0	2.47	$0	$0	$0	$0	$0
T-103	2		Dryer Feed Bin	STRM.A100.101	367,437	367,437	1.00	$0	2002	$0	0.75	$0	2.47	$0	$0	$0	$0	$0
T-104	2		Dried Biomass Hopper	STRM.A100.104	208,771	193,388	0.93	$0	2002	$0	0.75	$0	2.47	$0	$0	$0	$0	$0
T-105	2		Lock Hopper	STRM.A100.104	367,437	193,388	0.53	$0	2002	$0	0.75	$0	2.47	$0	$0	$0	$0	$0
T-106	2		Feed Hopper	STRM.A100.104	208,771	193,388	0.93	$0	2002	$0	0.75	$0	2.47	$0	$0	$0	$0	$0
A100									**Subtotal**	**$7,850,531**		**$7,850,526**	2.47	**$19,390,799**	**$22,813,624**	**$9,236,285**	**$25,600,765**	**$10,364,682**
C-201	1		Sand/ash Conditioner/Conveyor	STRM.A200.219	7,380	13,509	1.83	$0	2002	$0	0.65	$0	2.47	$0	$0	$0	$0	$0
C-202	1		MgO Screw Conveyor	STRM.A200.219	7,380	13,509	1.83	$0	2002	$0	0.65	$0	2.47	$0	$0	$0	$0	$0
C-203	1		Olivine Screw Conveyor	STRM.A200.219	7,380	13,509	1.83	$0	2002	$0	0.65	$0	2.47	$0	$0	$0	$0	$0
M-201	2		Sand/ash Cooler	STRM.A200.217	6,642	12,158	1.83	$0	2002	$0	0.65	$0	2.47	$0	$0	$0	$0	$0
R-201	2		Directly Heated Gasifier	STRM.A200.201	208,770	138,087	0.66	$5,542,673	2002	$11,085,347	0.65	$8,473,522	2.47	$20,929,599	$24,770,572	$10,028,572	$27,796,794	$11,253,763
S-201	2		Primary Gasifier Cyclone	STRM.A200.202	5,228,880	276,174	0.05	$0	2002	$0	0.65	$0	2.47	$0	$0	$0	$0	$0
S-202	2		Secondary Gasifier Cyclone	STRM.A200.222	246,484	264,120	1.07	$0	2002	$0	0.65	$0	2.47	$0	$0	$0	$0	$0
T-201	1		Sand/ash Bin	STRM.A200.222	6,642	264,120	39.77	$0	2002	$0	0.65	$0	2.47	$0	$0	$0	$0	$0
A200									**Subtotal**	**$11,085,347**		**$8,473,522**	2.47	**$20,929,599**	**$24,770,572**	**$10,028,572**	**$27,796,794**	**$11,253,763**
S-306	1		Tar Reformer Cyclone	STRM.A300.A300TR.325A	241,995	481,871	1.99	$0	2002	$0	0.65	$0	2.47	$0	$0	$0	$0	$0
H-AP-5	1		Cold FCAirPreHt /Hot WaterBlwdn Exchanger	PINCH	285,327	285,327	1.00	$24,323	2006	$24,323	0.65	$24,323	2.47	$60,078	$56,302	$22,794	$63,180	$25,579
H-AP-6	1		Hot RefExhQuench /Cold SteamGen Exchanger	PINCH	112,484,802	112,484,802	1.00	$87,215	2006	$87,215	0.65	$87,215	2.47	$215,421	$201,882	$81,734	$226,546	$91,719
H-AP-8	1		Hot RefExhQuench /Cold AlcSynPreHt Exchanger	PINCH	35,051,271	35,051,271	1.00	$689,447	2006	$689,447	0.65	$689,447	2.47	$1,702,934	$1,595,904	$646,115	$1,790,876	$725,051
H-AP-10	1		Hot RefExhQuench /Cold RefBleedPreHt Exchanger	PINCH	11,080,311	11,080,311	1.00	$131,015	2006	$131,015	0.65	$131,015	2.47	$323,607	$303,268	$122,781	$340,319	$137,781
H-BP-4	1		Cold FCAirPreHt /Hot Reformate Exchanger	PINCH	9,790,141	9,790,141	1.00	$87,215	2006	$87,215	0.65	$87,215	2.47	$215,421	$201,882	$81,734	$226,546	$91,719
H-BP-7	1		Cold RefBleedPreHt /Hot Reformate Exchanger	PINCH	755,215	755,215	1.00	$24,050	2006	$24,050	0.65	$24,050	2.47	$59,404	$55,670	$22,538	$62,471	$25,292

Equipment Number	Number Required	Number Spares	Equipment Name	Scaling Stream	Scaling Stream Flow (lb/hr or btu/hr)	New Stream Flow	Size Ratio	Original Equip Cost (per unit)	Base Year	Total Original Equip Cost (Req'd & Spare) in Base Year	Scaling Exp.	Scaled Cost in Base Year	Instal Factor	Installed Cost in Base Year	Installed Cost in 2005$	Scaled Uninstalled Cost in 2005$	Installed Cost in 2007$	Scaled Uninstalled Cost in 2007$
H-BP-12	1		Cold Water /Hot Reformate Exchanger	PINCH	5,451,970	5,451,970	1.00	$26,115	2006	$26,115	0.65	$26,115	2.47	$64,504	$60,450	$24,474	$67,835	$27,464
H-BP-13	1		Cold RefBleedPreHt /Hot Reformate Exchanger	PINCH	1,030,540	1,030,540	1.00	$24,315	2006	$24,315	0.65	$24,315	2.47	$60,058	$56,283	$22,787	$63,160	$25,571
H-BP-15	1		Cold FCAirPreHt /Hot Reformate Exchanger	PINCH	14,257,111	14,257,111	1.00	$92,515	2006	$92,515	0.65	$92,515	2.47	$228,512	$214,150	$86,700	$240,313	$97,293
K-305	1		Regenerator Combustion Air Blower	STRM.A300.A300TR.A300FC.329	304,578	582,915	1.91	$35,020	2002	$35,020	0.59	$51,362	2.47	$126,864	$150,146	$60,788	$168,489	$68,214
K-313	1		Blower for Dryer Exhaust to Fuel Combustor	STRM.A300.A300TR.A300FC.113	8,907	8,907	1.00	$7,521	2006	$7,521	0.59	$7,521	2.47	$18,577	$17,409	$7,048	$19,536	$7,909
R-303	1		Tar Reformer	STRM.A300.A300TR.325A	208,770	481,871	2.31	$5,542,673	2002	$5,542,673	0.65	$9,546,404	2.47	$23,579,618	$27,906,918	$11,298,348	$31,316,307	$12,678,667
R-301A	1		Tar Reformer Catalyst Regenerator	STRM.A300.A300TR.325A	234,433	481,871	2.06	$2,429,379	2002	$2,429,379	0.65	$3,880,502	2.47	$9,584,839	$11,343,836	**$4,592,646**	$12,729,713	**$5,153,730**
H-301	1		Quench Water Recirculation Cooler	STRM.A300.A300Q.301	241,995	481,871	1.99	$0	2002	$0	0.44	$0	2.47	$0	$0	$0	$0	$0
H-303	1		Water-cooled Aftercooler	HEAT.A700.QCH303CT	2,938,799	3,803,978	1.29	$20,889	2002	$20,889	0.44	$23,401	2.47	$57,800	$68,407	$27,695	$76,764	$31,079
H-301C-1	1		Pre-syngas water knockout, water-cooled exchanger	HEAT.A300.A300Q.QCH301C	14,024,659	14,024,660	1.00	$55,715	2006	$55,715	0.6	$55,715	2.47	$137,616	$128,967	$52,213	$144,723	$58,592
H-306	1		Waste Water Cooler / Cooling Water	HEAT.A300.A300Q.QCH306	478,964	478,964	1.00	$3,423	2006	$3,423	0.44	$3,423	2.47	$8,455	$7,923	$3,208	$8,891	$3,600
M-300	1		Fuel Mixer for Combustor	STRM.A300.A300TR.A300FC.328	241,496	133,736	0.55	$0	2002	$0	0.65	$0	2.47	$0	$0	$0	$0	$0
M-300H	1		Mixer Prior to Tar Reformer	STRM.A300.A300TR.386	241,496	325,315	1.35	$0	2002	$0	0.65	$0	2.47	$0	$0	$0	$0	$0
M-330	1		Mixer Prior to Reformate Quench	STRM.A300.A300TR.330	241,496	481,871	2.00	$0	2002	$0	0.65	$0	2.47	$0	$0	$0	$0	$0
M-301	1		Syngas Quench Chamber	STRM.A300.A300Q.301	241,496	481,871	2.00	$0	2002	$0	0.65	$0	2.47	$0	$0	$0	$0	$0
M-302	1		Syngas Venturi Scrubber	STRM.A300.A300Q.301	241,496	481,871	2.00	$0	2002	$0	0.65	$0	2.47	$0	$0	$0	$0	$0
P-301	1	1	Sludge Pump	STRM.A300.A300Q.336	997	1	0.00	$3,911	2002	$7,822	0.33	$862	2.47	$2,128	$2,519	$1,020	$2,827	$1,144
M-312A	1		Mixer In Syngas Quench Exchangers Train	STRM.A300.A300AGR.331	241,496	388,067	1.61	$0	2002	$0	0.65	$0	2.47	$0	$0	$0	$0	$0
SP-312B	1		Flow Split In Syngas Quench Exchangers Train	STRM.A300.A300AGR.331	241,496	388,067	1.61	$0	2002	$0	0.65	$0	2.47	$0	$0	$0	$0	$0
SP-330	1		Flow Split Before Reformer Exhaust Quench Exchangers	STRM.A300.A300AGR.331	241,496	388,067	1.61	$0	2002	$0	0.65	$0	2.47	$0	$0	$0	$0	$0
P-302	1	1	Quench Water Recirculation Pump	STRM.A300.A300Q.307	1,272,120	27,104	0.02	$0	2002	$0	0.65	$0	2.47	$0	$0	$0	$0	$0
P-303	1	1	LO-CAT Absorbent Solution Circulating Pump	STRM.A300.A300Q.301	241,496	481,871	2.00	$0	2002	$0	0.65	$0	2.47	$0	$0	$0	$0	$0
S-301	1		Syngas Recycle Water Knockout Vessel	STRM.A300.A300Q.315	220,009	388,895	1.77	$157,277	2002	$157,277	0.6	$221,361	2.47	$546,760	$647,101	$261,984	$726,158	$293,991
S-303	1		Pre-Amine System Knock-out	STRM.A300.A300Q.318	179,394	388,895	2.17	$40,244	2002	$40,244	0.6	$64,020	2.47	$158,129	$187,149	$75,769	$210,013	$85,026
T-301	1		Sludge Settling Tank	STRM.A300.A300Q.302	21,718	2,136	0.10	$11,677	2002	$11,677	0.6	$2,904	2.47	$7,174	$8,490	$3,437	$9,528	$3,857
T-302	1		Quench Water Recirculation Tank	STRM.A300.A300Q.301	241,496	481,871	2.00	$0	2002	$0	0.65	$0	2.47	$0	$0	$0	$0	$0
H-304-1	1		LO-CAT Preheater/Steam	A300.A300S.QH304	267,157	267,157	1.00	$2,423	2006	$2,423	0.6	$2,423	2.47	$5,985	$5,609	$2,271	$6,294	$2,548
H-305	1		LO-CAT Absorbent Solution Cooler	STRM.A300.A300S.320	179,394	119,165	0.66	$0	2002	$0	0.44	$0	2.47	$0	$0	$0	$0	$0
K-302	1		LO-CAT Feed Air Blower	STRM.A300.A300S.322	359	211	0.59	$0	2002	$0	0.65	$0	2.47	$0	$0	$0	$0	$0
K-373	1		Light-Ends for Alcohol Sep to Reformer Compressor	WORK.A300.A300TR.WK373	678	211	0.31	$403,122	2002	$403,122	0.8	$158,437	2.47	$391,339	$463,157	$187,513	$519,740	$210,421
K-384	1		CO2 Recycle into Tar Reformer	STRM.A300.A300S.384REC	45,330	45,330	1.00	$337,092	2006	$337,092	0.59	$337,090	2.47	$832,613	$780,283	$315,904	$875,611	$354,498
M-303	1		LO-CAT Venturi Precontactor	STRM.A300.A300S.323	517	304	0.59	$0	2002	$0	0.65	$0	2.47	$0	$0	$0	$0	$0
M-304	1		LO-CAT Liquid-filled Absorber	STRM.A300.A300S.320	179,394	119,165	0.66	$0	2002	$0	0.65	$0	2.47	$0	$0	$0	$0	$0
R-304	1		LO-CAT Oxidizer Vessel	STRM.A300.A300S.323	517	304	0.59	$1,000,000	2002	$1,000,000	0.65	$708,245	2.47	$1,749,366	$2,070,408	$838,222	$2,323,349	$940,627
S-310	1		L.P. Amine System	STRM.A300.A300AGR.331	263,170	388,067	1.47	$3,485,685	2002	$3,485,685	0.75	$4,664,349	2.47	$11,520,941	$13,635,250	$5,520,344	$15,301,068	$6,194,764
A300									**Subtotal**	**$14,726,172**		**$20,914,228**	2.47	**$51,658,143**	**$60,169,364**	**$24,360,066**	**$67,520,256**	**$27,336,136**
K-410	1		Mixed Alcohol Gas Compressor	WORK.A400.A400CMPR.WK410	10,617	9,167	0.86	$851,523	2002	$851,523	0.8	$757,160	2.47	$1,870,186	$2,213,401	$896,114	$2,483,812	$1,005,592
K-412	1		Purge Gas Expander	WORK.A400.WK412	2,500	9,540	3.82	$642,014	2002	$642,014	0.8	$1,874,278	2.47	$4,629,466	$5,479,059	$2,218,243	$6,148,436	$2,489,245
H-AP-9	1		Hot RefExhQuench /Cold AlcSynUnRxToRef Exchanger	PINCH	118,523,406	118,523,406	1.00	$3,265,799	2006	$3,265,799	0.65	$3,265,799	2.47	$8,066,524	$7,559,540	$3,060,543	$8,483,089	$3,434,449
H-AP-11	1		Hot Alc.Rx.Exh. /Cold WaterPreHt Exchanger	PINCH	29,355,899	29,355,899	1.00	$114,315	2006	$114,315	0.65	$114,315	2.47	$282,358	$264,612	$107,130	$296,939	$120,218
H-AP-12	1		Hot WaterBlwdn /Cold WaterPreHt Exchanger	PINCH	1,767,803	1,767,803	1.00	$20,958	2006	$20,958	0.65	$20,958	2.47	$51,766	$48,513	$19,641	$54,440	$22,040
H-BP-1	1		Hot Reformate /Cold AlcSynPreHt Exchanger	PINCH	7,628,739	7,628,739	1.00	$93,215	2006	$93,215	0.65	$93,215	2.47	$230,241	$215,770	$87,356	$242,131	$98,029
H-BP-5	1		Hot Reformate /Cold AlcSynUnRx Exchanger	PINCH	6,030,150	6,030,150	1.00	$71,315	2006	$71,315	0.65	$71,315	2.47	$176,148	$165,077	$66,833	$185,245	$74,998

Equipment Number	Number Required	Number Spares	Equipment Name	Scaling Stream	Scaling Stream Flow (lb/hr or btu/hr)	New Stream Flow	Size Ratio	Original Equip Cost (per unit)	Base Year	Total Original Equip Cost (Req'd & Spare) in Base Year	Scaling Exp.	Scaled Cost in Base Year	Instal Factor	Installed Cost in Base Year	Installed Cost in 2005$	Scaled Uninstalled Cost in 2005$	Installed Cost in 2007$	Scaled Uninstalled Cost in 2007$
H-BP-10	1		Hot Reformate /Cold AlcSynPreHt Exchanger	PINCH	6,680,484	6,680,484	1.00	$56,515	2006	$56,515	0.65	$56,515	2.47	$139,592	$130,819	$52,963	$146,801	$59,434
H-BP-14	1		Hot Reformate /Cold AlcSynUnRx Exchanger	PINCH	10,638,427	10,638,427	1.00	$76,415	2006	$76,415	0.65	$76,415	2.47	$188,745	$176,882	$71,612	$198,492	$80,361
H-BP-17	1		Hot Alc.Rx.Exh. /Cold Water Exchanger	PINCH	7,786,153	7,786,153	1.00	$68,415	2006	$68,415	0.65	$68,415	2.47	$168,985	$158,364	$64,115	$177,712	$71,948
K-414A	1		Mixed Alcohol Recycle Gas Compressor	STRM.A400.478	217	217	1.00	$124,749	2006	$124,749	0.8	$124,893	2.47	$308,485	$289,097	$117,043	$324,416	$131,342
H-414-1	1		Mixed Alcohol Condenser	A400.QCH414	4,427,038	4,427,039	1.00	$34,015	2006	$34,015	0.44	$34,015	2.47	$84,017	$78,737	$31,877	$88,356	$35,772
H-413	1		Mixed Alcohol first Condenser (air cooled)	WORK.A900.WK413FAN	88	110	1.24	$51,431	1990	$51,431	1	$51,431	2.47	$127,034	$166,324	$67,337	$186,643	$75,564
S-501	1		Mixed Alcohols Condensation Knock-out	STRM.A400.472	142,038	273,514	1.93	$55,447	2002	$55,447	0.6	$82,153	2.47	$202,918	$240,157	$97,230	$269,497	$109,108
R-410	1		Mixed Alcohol Reactor	STRM.A400.470	847,552	273,514	0.32	$2,026,515	2002	$2,026,515	0.56	$1,075,686	2.47	$2,656,944	$3,144,543	$1,273,094	$3,528,712	$1,428,628
SP-470	1		Flow Split Before Alc.Syn. Below Pinch Exchangers	STRM.A400.470	241,496	273,514	1.13	$0	2002	$0	0.65	$0	2.47	$0	$0	$0	$0	$0
M-470A	1		Mixer After Alc.Syn. Below Pinch Exchangers	STRM.A400.470	241,496	273,514	1.13	$0	2002	$0	0.65	$0	2.47	$0	$0	$0	$0	$0
A400									**Subtotal**	**$7,552,641**		**$7,766,563**	2.47	**$19,183,410**	**$20,330,895**	**$8,231,132**	**$22,814,721**	**$9,236,729**
H-513	1		Mol Sieve Flush Condenser (air cooled)	WORK.A900.WK513FAN	60	11	0.18	$20,678	1990	$20,678	1	$20,678	2.47	$51,075	$66,871	$27,073	$75,041	$30,381
H-504C	1		D-504 condenser (air cooled)	WORK.A900.WK504FAN	82	45	0.55	$36,248	1990	$36,248	1	$36,248	2.47	$89,533	$117,224	$47,459	$131,545	$53,257
H-505C	1		D-505 condenser (air cooled)	WORK.A900.WK505FAN	285	137	0.48	$56,196	1990	$56,196	1	$56,196	2.47	$138,803	$181,733	$73,576	$203,935	$82,565
M-500B	1		Mol-Sieve Off Gas Mixer	STRM.A500.505	241,496	52,573	0.22	$0	2002	$0	0.65	$0	2.47	$0	$0	$0	$0	$0
S-503	1		Molecular Sieve (9 pieces)	STRM.A500.505	45,175	52,573	1.16	$904,695	1998	$904,695	0.7	$1,006,028	2.47	$2,484,888	$2,986,970	$1,209,300	$3,351,888	$1,357,040
S-502	1		LP Syngas Separator	STRM.A500.503	142,038	56,202	0.40	$55,447	2002	$55,447	0.6	$31,790	2.47	$78,520	$92,930	$37,624	$104,283	$42,220
D-504	1		Ethanol/Propanol Splitter	DD504	13.5	6.0	0.45	$478,100	1998	$478,100	1.32	$165,100	2.1	$346,709	$416,763	$198,459	$467,679	$222,704
D-505	1		Methanol/Ethanol Splitter	DD505	13.5	6.5	0.48	$478,100	1998	$478,100	1.32	$183,212	2.1	$384,745	$462,485	$220,231	$518,986	$247,136
H-504R	1		Ethanol/Propanol Splitter Reboiler	HEAT.A500.A504.QRH504	-112,341,710.7	-16,430,402	0.15	$158,374	1996	$158,374	0.68	$42,851	2.1	$89,986	$110,379	$52,561	$123,864	$58,983
H-505R	1		Methanol/Ethanol Splitter Reboiler	HEAT.A500.A504.QRH505	-112,341,710.7	-23,566,276	0.21	$158,374	1996	$158,374	0.68	$54,761	2.1	$114,999	$141,060	$67,171	$158,293	$75,378
P-504B	1	1	Ethanol/Propanol Splitter Bottoms Pump	FLD504	40,528	1,444	0.04	$42,300	1997	$84,600	0.79	$6,071	2.8	$16,998	$20,591	$7,354	$23,107	$8,252
P-505B	1	1	Methanol/Ethanol Splitter Bottoms Pump	FLD505	40,528	2,593	0.06	$42,300	1997	$84,600	0.79	$9,643	2.8	$27,000	$32,708	$11,681	$36,703	$13,108
P-504R	1	1	Ethanol/Propanol Splitter Reflux Pump	A500.A504.QAH504	3,968,983.2	18,833,690	0.37	$1,357	1998	$2,714	0.79	$1,240	2.8	$3,471	$4,172	$1,490	$4,682	$1,672
P-505R	1	1	Methanol/Ethanol Splitter Reflux Pump	A500.A504.QAH505	3,968,983.2	36,817,833	0.37	$1,357	1998	$2,714	0.79	$1,240	2.8	$3,471	$4,172	$1,490	$4,682	$1,672
T-504	1		Ethanol/Propanol Splitter Reflux Drum	A500.A504.QAH504	3,968,983.2	18,833,690	0.37	$11,900	1997	$11,900	0.93	$4,731	2.1	$9,934	$12,034	$5,731	$13,505	$6,431
T-505	1		Methanol/Ethanol Splitter Reflux Drum	A500.A504.QAH505	3,968,983.2	36,817,833	0.37	$11,900	1997	$11,900	0.93	$4,731	2.1	$9,934	$12,034	$5,731	$13,505	$6,431
P-590	1		Mixed Alcohol Product Pump	STRM.590	40,894	7,204	0.18	$7,500	1997	$7,500	0.79	$1,903	2.47	$4,699	$5,693	$2,305	$6,388	$2,586
P-592	1		Ethanol Product Pump	STRM.592	40,894	39,731	0.97	$7,500	1997	$7,500	0.79	$7,331	2.47	$18,108	$21,935	$8,881	$24,615	$9,966
P-591	2		Mixed Alcohol Product Pump	STRM.590	40,895	7,204	0.18	$7,501	1998	$15,002	1.79	$670	3.47	$2,326	$2,796	$806	$3,138	$904
P-593	3		Ethanol Product Pump	STRM.592	40,896	39,731	0.97	$7,502	1999	$22,506	2.79	$20,763	4.47	$92,810	$111,248	$24,888	$124,840	$27,928
H-592-1	1		Ethanol Product Cooler (air cooled)	WORK.A900.WK592FAN	8	7	0.86	$17,065	1990	$17,065	1	$17,065	2.47	$42,150	$55,187	$22,343	$61,929	$25,072
H-590-1	1		Mixed Alcohol Product Cooler (air cooled)	WORK.A900.WK590FAN	2	1	0.84	$9,024	1990	$9,024	1	$9,024	2.47	$22,290	$29,184	$11,815	$32,749	$13,259
H-591-1	1		Higher Alcohol Product Finishing cooler	HEAT.A500.QCH591	235,135	235,135	1.00	$2,923	2006	$2,923	0.6	$2,923	2.47	$7,220	$6,766	$2,739	$7,593	$3,074
H-593-1	1		ETHANOL Product Finishing cooler	HEAT.A500.QCH593	1,435,684	1,435,684	1.00	$19,158	2006	$19,158	0.6	$19,158	2.47	$47,320	$44,346	$17,954	$49,764	$20,147
H-BP-2	1		Cold MolSievPreHt /Hot Reformate Exchanger	PINCH	3,151,827	3,151,827	1.00	$28,415	2006	$28,415	0.65	$28,415	2.47	$70,185	$65,774	$26,629	$73,809	$29,882
H-BP-3	1		Cold MolSievPreHt /Hot Reformate Exchanger	PINCH	441,157	441,157	1.00	$19,758	2006	$19,758	0.65	$19,758	2.47	$48,802	$45,735	$18,516	$51,322	$20,778
H-BP-16	1		Cold MolSievPreHt /Hot Reformate Exchanger	PINCH	21,278,310	21,278,310	1.00	$81,615	2006	$81,615	0.65	$81,615	2.47	$201,589	$188,919	$76,485	$211,999	$85,830
T-592	2		Ethanol Product Storage Tank	STRM.592	40,894	39,731	0.97	$165,800	1997	$331,600	0.51	$326,757	2.47	$807,090	$977,697	$395,829	$1,097,142	$444,187
T-590	2		Mixed Alcohol Product Storage Tank	STRM.590	40,894	7,204	0.18	$165,800	1997	$331,600	0.51	$136,784	2.47	$337,857	$409,275	$165,698	$459,276	$185,942
A500									**Subtotal**	**$3,438,306**		**$2,296,684**	2.41762336	**$5,552,516**	**$6,626,682**	**$2,741,819**	**$7,436,264**	**$3,076,787**

Equipment Number	Number Required	Number Spares	Equipment Name	Scaling Stream	Scaling Stream Flow (lb/hr or btu/hr)	New Stream Flow	Size Ratio	Original Equip Cost (per unit)	Base Year	Total Original Equip Cost (Req'd & Spare) in Base Year	Scaling Exp.	Scaled Cost in Base Year	Instal Factor	Installed Cost in Base Year	Installed Cost in 2005$	Scaled Uninstalled Cost in 2005$	Installed Cost in 2007$	Scaled Uninstalled Cost in 2007$
H-601	1		Steam Turbine Condenser	STRM.A600.A600ST.614	93,974	147	0.00	$0	2002	$0	0.71	$0	2.47	$0	$0	$0	$0	$0
H-603	1		Blowdown Water-cooled Cooler	HEAT.A700.QCH603CT	626,343	1,804,297	2.88	$16,143	2002	$16,143	0.44	$25,714	2.47	$63,513	$75,168	$30,432	$84,352	$34,150
H-BP-6	1		Hot Reformate /Cold Water Exchanger	PINCH	19,468,447	19,468,447	1.00	$163,847	2006	$163,847	0.65	$163,847	2.47	$404,702	$379,266	$153,549	$425,601	$172,308
H-BP-8	1		Cold Water /Hot Reformate Exchanger	PINCH	227,758	227,758	1.00	$19,148	2006	$19,148	0.65	$19,148	2.47	$47,296	$44,323	$17,945	$49,738	$20,137
H-BP-9	1		Cold Water /Hot Reformate Exchanger	PINCH	995,500	995,500	1.00	$20,850	2006	$20,850	0.65	$20,850	2.47	$51,500	$48,263	$19,540	$54,159	$21,927
H-BP-11	1		Hot Reformate /Cold WaterRecy Exchanger	PINCH	7,281,081	7,281,081	1.00	$48,915	2006	$48,915	0.65	$48,915	2.47	$120,820	$113,226	$45,841	$127,059	$51,441
M-601	1		Hot Process Water Softener System	STRM.A600.A600BF.631	349,266	437,614	1.25	$1,031,023	1999	$1,031,023	0.82	$1,240,437	2.47	$3,063,880	$3,672,577	$1,486,873	$4,121,256	$1,668,525
M-602	1		Extraction Steam Turbine/Generator	STRM.A600.607	342,283	428,864	1.25	$4,045,870	2002	$4,045,870	0.71	$4,748,381	2.47	$11,728,502	$13,880,902	$5,619,798	$15,576,732	$6,306,369
P-601	1	1	Collection Pump	STRM.618	255,292	32,032	0.13	$7,015	2002	$14,030	0.33	$7,073	2.47	$17,469	$20,675	$8,370	$23,201	$9,393
P-602	1	1	Condensate Pump	STRM.A600.616	93,974	147	0.00	$5,437	2002	$10,874	0.33	$1,290	2.47	$3,186	$3,771	$1,527	$4,232	$1,713
P-603	1	1	Deaerator Feed Pump	STRM.A600.A600BF.628	349,266	437,614	1.25	$8,679	2002	$17,358	0.33	$18,699	2.47	$46,187	$54,663	$22,131	$61,341	$24,834
P-604	1	1	Boiler Feed Water Pump	STRM.A600.A600BL.639	349,268	437,617	1.25	$95,660	2002	$191,320	0.33	$206,100	2.47	$509,068	$602,492	$243,924	$676,098	$273,724
T-601	1		Condensate Collection Tank	STRM.A600.A600BF.627	349,266	437,614	1.25	$24,493	2002	$24,493	0.6	$28,042	2.47	$69,263	$81,974	$33,188	$91,988	$37,242
T-602	1		Condensate Surge Drum	STRM.A600.A600BL.638	349,268	437,617	1.25	$28,572	2002	$28,572	0.6	$32,712	2.47	$80,798	$95,626	$38,715	$107,308	$43,445
T-603	1		Deaerator	STRM.A600.633	349,266	437,614	1.25	$130,721	2002	$130,721	0.72	$153,765	2.47	$379,800	$449,501	$181,984	$504,416	$204,217
T-604	1		Steam Drum	STRM.A600.644	349,268	437,617	1.25	$9,200	1997	$9,200	0.72	$10,822	2.47	$26,730	$32,380	$13,109	$36,336	$14,711
S-601	1		Blowdown Flash Drum	STRM.A600.604	6,985	8,752	1.25	$14,977	2002	$14,977	0.6	$17,147	2.47	$42,354	$50,127	$20,294	$56,251	$22,774
A600									**Subtotal**	**$5,787,341**		**$6,742,942**	2.47	**$16,655,067**	**$19,604,933**	**$7,937,220**	**$22,000,068**	**$8,906,910**
K-701	2	1	Plant Air Compressor	STRM.A100.101	367,437	367,437	1.00	$32,376	2002	$97,129	0.34	$97,129	2.47	$239,908	$283,936	$114,954	$318,624	$128,998
M-701	1		Cooling Tower System	HEAT.A700.QCTOTAL	139,850,763	34,800,014	0.25	$267,316	2002	$267,316	0.78	$90,331	2.47	$223,118	$264,065	$106,909	$296,326	$119,970
M-702	1		Hydraulic Truck Dump with Scale	STRM.A100.101	367,437	367,437	1.00	$80,000	1998	$80,000	0.6	$80,000	2.47	$197,600	$237,526	$96,164	$266,544	$107,913
M-703	1		Flue Gas Stack	STRM.335	1,174,206	716,651	0.61	$51,581	2002	$51,581	1	$31,481	2.47	$77,759	$92,029	$37,259	$103,272	$41,811
P-701	1	1	Cooling Water Pump	STRM.A700.715	6,088,320	1,617,066	0.27	$158,540	2002	$317,080	0.33	$204,722	2.47	$505,664	$598,462	$242,293	$671,577	$271,893
P-702	1	1	Firewater Pump	STRM.A100.101	367,437	367,437	1.00	$18,400	1997	$36,800	0.79	$36,800	2.47	$90,896	$110,110	$44,579	$123,562	$50,025
P-703	1	1	Diesel Pump	STRM.A100.101	367,437	367,437	1.00	$6,100	1997	$12,200	0.79	$12,200	2.47	$30,134	$36,504	$14,779	$40,963	$16,584
P-704	1	1	Ammonia Pump	STRM.A100.101	367,437	367,437	1.00	$5,000	1997	$10,000	0.79	$10,000	2.47	$24,700	$29,921	$12,114	$33,577	$13,594
P-705	1		Hydrazine Pump	STRM.A100.101	367,437	367,437	1.00	$5,500	1997	$5,500	0.79	$5,500	2.47	$13,585	$16,457	$6,663	$18,467	$7,477
S-701	1	1	Instrument Air Dryer	STRM.A100.101	367,437	367,437	1.00	$8,349	2002	$16,698	0.6	$16,698	2.47	$41,244	$48,813	$19,762	$54,777	$22,177
T-701	1		Plant Air Receiver	STRM.A100.101	367,437	367,437	1.00	$7,003	2002	$7,003	0.72	$7,003	2.47	$17,297	$20,472	$8,288	$22,973	$9,301
T-702	1		Firewater Storage Tank	STRM.A100.101	367,437	367,437	1.00	$166,100	1997	$166,100	0.51	$166,100	2.47	$410,267	$496,991	$201,211	$557,708	$225,793
T-703	1		Diesel Storage Tank	STRM.A100.101	367,437	367,437	1.00	$14,400	1997	$14,400	0.51	$14,400	2.47	$35,568	$43,086	$17,444	$48,350	$19,575
T-704	1		Ammonia Storage Tank	STRM.A100.101	367,437	367,437	1.00	$287,300	1997	$287,300	0.72	$287,300	2.47	$709,631	$859,635	$348,030	$964,657	$390,549
T-705	1		Olivine Lock Hopper	STRM.A100.101	367,437	367,437	1.00	$0	1998	$0	0.71	$0	2.47	$0	$0	$0	$0	$0
T-706	1		MgO Lock Hopper	STRM.A100.101	367,437	367,437	1.00	$0	1998	$0	0.71	$0	2.47	$0	$0	$0	$0	$0
T-707	1		Hydrazine Storage Tank	STRM.A100.101	367,437	367,437	1.00	$12,400	1997	$12,400	0.93	$12,400	2.47	$30,628	$37,102	$15,021	$41,635	$16,856
A700									**Subtotal**	**$1,381,507**		**$1,072,064**	2.47	**$2,647,999**	**$3,175,109**	**$1,285,469**	**$3,563,012**	**$1,442,515**
H-802N	1		N2-compressor water cooled aftercooler	HEAT.A100.A100HOP.QK802N	272,195	4,642,551	17.06	$16,828	2002	$16,828	0.44	$58,622	2.47	$144,796	$171,368	$69,380	$192,304	$77,856
K-802N	1		post ASU N2 compressor	WORK.A600.WK802N	1,907	1,907	1.00	$1,187,100	2004	$1,187,100	0.8	$1,187,000	2.47	$2,931,891	$3,090,300	$1,251,134	$3,467,842	$1,403,985
M-802	1		Air Separation Unit (ASU) including air compressor	STRM.A800.820	52,911	42,281	0.80	$7,590,607	1999	$7,590,607	0.75	$6,415,385	2.47	$15,846,002	$18,994,107	$7,689,922	$21,314,617	$8,629,400
S-801N	1		Pre N2-compressor KO	STRM.A800.810	34,856	34,856	1.00	$8,763	2002	$8,763	0.6	$8,763	2.47	$21,645	$25,617	$10,371	$28,746	$11,638
S-802N	1		Post N2-compressor KO	STRM.A100.A100HOP.812	34,856	34,593	0.99	$9,277	2002	$9,277	0.6	$9,235	2.47	$22,810	$26,997	$10,930	$30,295	$12,265

Equipment Number	Number Required	Number Spares	Equipment Name	Scaling Stream	Scaling Stream Flow (lb/hr or btu/hr)	New Stream Flow	Size Ratio	Original Equip Cost (per unit)	Base Year	Total Original Equip Cost (Req'd & Spare) in Base Year	Scaling Exp.	Scaled Cost in Base Year	Instal Factor	Installed Cost in Base Year	Installed Cost in 2005$	Scaled Uninstalled Cost in 2005$	Installed Cost in 2007$	Scaled Uninstalled Cost in 2007$
K-802	1		post ASU O2 compressor	WORK.A800.WK802	1,508	1,508	1.00	$1,113,800	2004	$1,113,800	0.8	$1,113,541	2.47	$2,750,445	$2,899,051	$1,173,705	$3,253,228	$1,317,096
S-803	1		Pre O2-compressor KO	STRM.A800.815	34,856	42,281	1.21	$8,763	2002	$8,763	0.6	$9,839	2.47	$24,303	$28,764	$11,645	$32,278	$13,068
A800									**Subtotal**	**$9,935,138**		**$8,802,385**	2.47	**$21,741,891**	**$25,236,202**	**$10,217,086**	**$28,319,310**	**$11,465,308**
								Equipment Cost		**$61,756,983**		**$63,918,914**	2.46811804	**$157,759,424**	**$182,727,383**	**$74,037,649**	**$205,051,189**	**$83,082,829**

Appendix D

Discounted Cash Flow Rate of Return and Operating Costs Summary

DCFROR Worksheet													
Year		-2	-1	0	1	2	3	4	5	6	7	8	9
Fixed Capital Investment		$24,770,233	$152,459,806	$81,311,896									
Working Capital				$12,704,984									
Loan Payment					$0	$0	$0	$0	$0	$0	$0	$0	$0
Loan Interest Payment		$0	$0	$0	$0	$0	$0	$0	$0	$0	$0	$0	$0
Loan Principal		$0	$0	$0	$0	$0	$0	$0	$0	$0	$0	$0	$0
Ethanol Sales					$59,183,847	$78,911,796	$78,911,796	$78,911,796	$78,911,796	$78,911,796	$78,911,796	$78,911,796	$78,911,796
By-Product Credit					$7,894,628	$10,526,171	$10,526,171	$10,526,171	$10,526,171	$10,526,171	$10,526,171	$10,526,171	$10,526,171
Total Annual Sales					$67,078,476	$89,437,967	$89,437,967	$89,437,967	$89,437,967	$89,437,967	$89,437,967	$89,437,967	$89,437,967
Annual Manufacturing Cost													
Raw Materials					$23,647,650	$27,025,885	$27,025,885	$27,025,885	$27,025,885	$27,025,885	$27,025,885	$27,025,885	$27,025,885
Tar reforming catalysts					$986,684								
Steam reforming catalysts					$0					$0			
ZnO					$0					$0			
Mixed Alcohol catalysts					$356,865	$0	$0	$0	$0	$356,865	$0	$0	$0
Baghouse Bags					$415,430					$415,430			
Other Variable Costs					$2,466,081	$2,800,464	$2,800,464	$2,800,464	$2,800,464	$2,800,464	$2,800,464	$2,800,464	$2,800,464
Fixed Operating Costs					$14,590,072	$14,590,072	$14,590,072	$14,590,072	$14,590,072	$14,590,072	$14,590,072	$14,590,072	$14,590,072
Total Product Cost					$42,462,782	$44,416,421	$44,416,421	$44,416,421	$44,416,421	$45,188,716	$44,416,421	$44,416,421	$44,416,421
Annual Depreciation													
General Plant													
DDB					$64,816,821	$46,297,729	$33,069,807	$23,621,290	$16,872,350	$12,051,679	$8,608,342		
SL					$32,408,410	$27,007,009	$23,148,865	$20,668,629	$19,684,409	$19,684,409	$19,684,409		
Remaining Value					$162,042,052	$115,744,323	$82,674,516	$59,053,226	$42,180,876	$30,129,197	$21,520,855		
Actual					$64,816,821	$46,297,729	$33,069,807	$23,621,290	$19,684,409	$19,684,409	$19,684,409		
Steam Plant													
DDB					$2,043,060	$1,889,831	$1,748,093	$1,616,986	$1,495,712	$1,383,534	$1,279,769	$1,183,786	$1,095,002
SL					$1,362,040	$1,326,197	$1,294,884	$1,268,225	$1,246,427	$1,229,808	$1,218,828	$1,214,140	$1,214,140
Remaining Value					$25,197,743	$23,307,912	$21,559,819	$19,942,832	$18,447,120	$17,063,586	$15,783,817	$14,600,031	$13,505,029
Actual					$2,043,060	$1,889,831	$1,748,093	$1,616,986	$1,495,712	$1,383,534	$1,279,769	$1,214,140	$1,214,140
Net Revenue					($42,244,188)	($3,166,013)	$10,203,647	$19,783,270	$23,841,425	$23,181,309	$24,057,369	$43,807,407	$43,807,407
Losses Forward						($42,244,188)	($45,410,201)	($35,206,554)	($15,423,285)	$0	$0	$0	$0
Taxable Income					($42,244,188)	($45,410,201)	($35,206,554)	($15,423,285)	$8,418,141	$23,181,309	$24,057,369	$43,807,407	$43,807,407
Income Tax					$0	$0	$0	$0	$3,283,075	$9,040,710	$9,382,374	$17,084,889	$17,084,889
Annual Cash Income					$24,615,694	$45,021,547	$45,021,547	$45,021,547	$41,738,472	$35,208,541	$35,639,173	$27,936,658	$27,936,658
Discount Factor		1.21	1.1	1	0.909090909	0.826446281	0.751314801	0.683013455	0.620921323	0.56447393	0.513158118	0.46650738	0.424097618
Annual Present Value	$289,806,134				$22,377,903	$37,207,890	$33,825,354	$30,750,322	$25,916,307	$19,874,303	$18,288,531	$13,032,657	$11,847,870
Total Capital Investment + Interest		$29,971,981.99	$167,705,786.39	$94,016,880.25									
Net Present Worth				$0									

DCFROR Worksheet											
Year	10	11	12	13	14	15	16	17	18	19	20
Fixed Capital Investment											
Working Capital											($12,704,984)
Loan Payment	$0	$0	$0	$0	$0	$0	$0	$0	$0	$0	$0
Loan Interest Payment	$0	$0	$0	$0	$0	$0	$0	$0	$0	$0	$0
Loan Principal	$0	$0	$0	$0	$0	$0	$0	$0	$0	$0	$0
Ethanol Sales	$78,911,796	$78,911,796	$78,911,796	$78,911,796	$78,911,796	$78,911,796	$78,911,796	$78,911,796	$78,911,796	$78,911,796	$78,911,796
By-Product Credit	$10,526,171	$10,526,171	$10,526,171	$10,526,171	$10,526,171	$10,526,171	$10,526,171	$10,526,171	$10,526,171	$10,526,171	$10,526,171
Total Annual Sales	$89,437,967	$89,437,967	$89,437,967	$89,437,967	$89,437,967	$89,437,967	$89,437,967	$89,437,967	$89,437,967	$89,437,967	$89,437,967
Annual Manufacturing Cost											
Raw Materials	$27,025,885	$27,025,885	$27,025,885	$27,025,885	$27,025,885	$27,025,885	$27,025,885	$27,025,885	$27,025,885	$27,025,885	$27,025,885
Tar reforming catalysts											
Steam reforming catalysts		$0					$0				
ZnO		$0					$0				
Mixed Alcohol catalysts	$0	$356,865	$0	$0	$0	$0	$356,865	$0	$0	$0	$0
Baghouse Bags		$415,430					$415,430				
Other Variable Costs	$2,800,464	$2,800,464	$2,800,464	$2,800,464	$2,800,464	$2,800,464	$2,800,464	$2,800,464	$2,800,464	$2,800,464	$2,800,464
Fixed Operating Costs	$14,590,072	$14,590,072	$14,590,072	$14,590,072	$14,590,072	$14,590,072	$14,590,072	$14,590,072	$14,590,072	$14,590,072	$14,590,072
Total Product Cost	$44,416,421	$45,188,716	$44,416,421	$44,416,421	$44,416,421	$44,416,421	$45,188,716	$44,416,421	$44,416,421	$44,416,421	$44,416,421
Annual Depreciation											
General Plant											
DDB											
SL											
Remaining Value											
Actual											
Steam Plant											
DDB	$1,012,877	$936,911	$866,643	$801,645	$741,521	$685,907	$634,464	$586,879	$542,863	$502,149	$464,488
SL	$1,214,140	$1,214,140	$1,214,140	$1,214,140	$1,214,140	$1,214,140	$1,214,140	$1,214,140	$1,214,140	$1,214,140	$1,214,140
Remaining Value	$12,492,151	$11,555,240	$10,688,597	$9,886,952	$9,145,431	$8,459,524	$7,825,059	$7,238,180	$6,695,316	$6,193,168	$5,728,680
Actual	$1,214,140	$1,214,140	$1,214,140	$1,214,140	$1,214,140	$1,214,140	$1,214,140	$1,214,140	$1,214,140	$1,214,140	$1,214,140
Net Revenue	$43,807,407	$43,035,111	$43,807,407	$43,807,407	$43,807,407	$43,807,407	$43,035,111	$43,807,407	$43,807,407	$43,807,407	$43,807,407
Losses Forward	$0	$0	$0	$0	$0	$0	$0	$0	$0	$0	$0
Taxable Income	$43,807,407	$43,035,111	$43,807,407	$43,807,407	$43,807,407	$43,807,407	$43,035,111	$43,807,407	$43,807,407	$43,807,407	$43,807,407
Income Tax	$17,084,889	$16,783,693	$17,084,889	$17,084,889	$17,084,889	$17,084,889	$16,783,693	$17,084,889	$17,084,889	$17,084,889	$17,084,889
Annual Cash Income	$27,936,658	$27,465,558	$27,936,658	$27,936,658	$27,936,658	$27,936,658	$27,465,558	$27,936,658	$27,936,658	$27,936,658	$27,936,658
Discount Factor	0.385543289	0.350493899	0.318630818	0.28966438	0.263331254	0.239392049	0.217629136	0.197844669	0.17985879	0.163507991	0.148643628
Annual Present Value	$10,770,791	$9,626,510	$8,901,480	$8,092,255	$7,356,595	$6,687,814	$5,977,306	$5,527,119	$5,024,653	$4,567,867	$4,152,606
Total Capital Investment + Interest											($1,888,514.89)
Net Present Worth											

Ethanol from Mixed Alcohols Production Process Engineering Analysis

2012 Market Target Case: 2010 Tar Reforming Goal & Mixed Alcohol Production
2,000 Dry Metric Tonnes Biomass per Day
GTI Gasifier, Tar Reformer, Sulfur Removal, MoS2 Catalyst, Fuel Purification, Steam-Power Cycle
All Values in 2005$

Minimum Ethanol Selling Price ($/gal) **$1.57**

EtOH Production at Operating Capacity (MM Gal / year)	50.4
EtOH Product Yield (gal / Dry US Ton Feedstock)	65.3
Mixed Alcohols Production at Operating Capacity (MM Gal / year)	59.3
Mixed Alcohols Product Yield (gal / Dry US Ton Feedstock)	76.8
Delivered Feedstock Cost $/Dry US Ton	$35
Internal Rate of Return (After-Tax)	10%
Equity Percent of Total Investment	100%

Capital Costs	
Feed Handling & Drying	$22,800,000
Gasification	$24,800,000
Tar Reforming & Quench	$43,200,000
Acid Gas & Sulfur Removal	$17,000,000
Alcohol Synthesis - Compression	$7,700,000
Alcohol Synthesis - Other	$12,600,000
Alcohol Separation	$6,600,000
Steam System & Power Generation	$19,600,000
Cooling Water & Other Utilities	$3,200,000
Air Separation Unit	$25,200,000
Total Installed Equipment Cost	$182,700,000
Indirect Costs	71,400,000
(% of TPI)	28.1%
Project Contingency	5,500,000
Total Project Investment (TPI)	$254,100,000
Installed Equipment Cost per Annual Gallon	$3.62
Total Project Investment per Annual Gallon	$5.04
Loan Rate	N/A
Term (years)	N/A
Capital Charge Factor	0.176
Maximum Yields based on carbon content	
Theoretical Ethanol Production (MM gal/yr)	158.9
Theoretical Ethanol Yield (gal/dry ton)	205.8
Current Ethanol Yield (Actual/Theoretical)	32%
Gasifier Efficiency - HHV %	79.7
Gasifier Efficiency - LHV %	78.2
Overall Plant Efficiency - HHV %	39.5
Overall Plant Efficiency - LHV %	38.4
Plant Hours per year	8406
%	96.0%

Operating Costs (cents/gal product)	
Feedstock	53.6
Natural Gas	0.0
Catalysts	0.4
Olivine	2.8
Other Raw Materials	3.2
Waste Disposal	3.0
Electricity	-3.6
Fixed Costs	28.9
Co-product credits	-20.8
Capital Depreciation	25.2
Average Income Tax	17.7
Average Return on Investment	46.1

Operating Costs ($/yr)	
Feedstock	$27,000,000
Natural Gas	$0
Catalysts	$200,000
Olivine	$1,400,000
Other Raw Matl. Costs	$200,000
Waste Disposal	$1,500,000
Electricity	-$1,800,000
Fixed Costs	$14,600,000
Co-product credits @ $1.15 per gal	-$10,500,000
Capital Depreciation	$12,700,000
Average Income Tax	$8,900,000
Average Return on Investment	$23,200,000
Total Plant Electricity Usage (KW)	7,136
Electricity Produced Onsite (KW)	10,994
Electricity Purchased from Grid (KW)	0
Electricity Sold to Grid (KW)	3,858
Steam Plant + Turboexpander Power Generated (hp	38,784
Used for Main Compressors (hp)	24,041
Used for Electricity Generation (hp)	14,743
Plant Electricity Use (KWh/gal product)	1.6
Gasification & Reforming Steam Use (lb/gal)	19.1

Variable Operating Costs											
Costing Code	Raw Material	Stream No.	kg/hr (or kW)	lb/hr (or HP)	Quoted Price (cents/ton, or cents/kWh)	Year of Price Quote	2000 Cost (cents / ton)	2000 Cost ($/lb)	$/hour	MM$/yr (2005)	Cents/gal (2005)
F-3	Feedstock - wood chips	STRM.100	166,667	367,437	1750	2005	1464.10	0.0073	2,689.81	27.03	53.61
R-12	Magnesium Oxide (MgO)	STRM.220	3	7	36500	2004	33099.25	0.1655	1.09	0.01	0.02
R-13	Fresh Olivine Makeup	STRM.204	826	1,821	17290	2004	15679.07	0.0784	142.77	1.43	2.85
S-26	Natural Gas for Gasifier	STRM.206	0	0	22176	2003	21111.66	0.1056	0.00	0.00	0.00
R-14	Tar Reformer Catalyst	STRM.A300.A300TR.326	1	1	934000	2002	930437.38	4.6522	6.05	0.06	0.12
s-28	LO-CAT chemicals	STRM.324	40	87	13605	2004	12337.40	0.0617	5.39	0.05	0.11
S-23	Natural Gas for Reformer	STRM.A300.A300TR.A300FC.340	0	0	22176	2003	21111.66	0.1056	0.00	0.00	0.00
	Amine Make-Up	STRM.A300.A300AGR.AM-COLD	65	143	218000	2005	182384.41	0.9119	130.62	1.31	2.60
S-25	Boiler Feed Water Makeup	STRM.618	14,529	32,032	24	1990	30.43	0.0002	4.87	0.05	0.10
S-21	Boiler Chemicals	STRM.635	1	3	280000	1991	349331.21	1.7467	5.35	0.05	0.11
S-22	Cooling Tower Chems	STRM.711	0	0	200000	1999	209352.04	1.0468	0.34	0.00	0.01
S-24	Cooling Tower Makeup	STRM.710	12,929	28,503	24	1990	30.43	0.0002	4.34	0.04	0.09
S-27	No. 2 Diesel Fuel		31	69	29133	2003	27734.76	0.1387	9.60	0.10	0.19
P-2	Electricity	WORK.WNET	-3,858	-5,173	4.74	2003			-182.86	-1.84	-3.64
	Subtotal								**2,817.36**	**28.31**	**56.15**
	Waste Streams										
W-4	Sand and Ash Purge	STRM.219	6,128	13,509	1820	1993	2224.60	0.0111	150.26	1.51	2.99
	tar reformer catalyst disposal			1	1820	1993	2224.60	0.0111	0.01	0.00	0.00
	wwt COST	STRM.305	1,344	2,963	67	2004	60.30	0.0003	0.89	0.01	0.02
	Subtotal								**151.17**	**1.52**	**3.01**
	By-Product Credits										
	Mixed Alcohol	STRM.590	3,268	7,204	34716	2005	29043.95	0.1452	1,046.18	10.51	20.85
	Carbon Dioxide	STRM.A300.384VENT	33,449	73,743	0	2005	0.00	0.0000	0.00	0.00	0.00
	Sulfur	STRM.324	40	87	4000	2005	3346.50	0.0167	1.46	0.01	0.03
	Subtotal								**1,047.64**	**10.53**	**20.88**
	Total Variable Operating Costs								**1,920.89**	**19.30**	**38.29**
	Fixed Operating Costs										
	Plant Manager	110000	1	110,000		53					
	Plant Engineer	65000	1	65,000		31					
	Maintenance Supr	60000	1	60,000		29					
	Lab Manager	50000	1	50,000		24					
	Shift Supervisor	45000	5	225,000		22					
	Lab Technician	35000	2	70,000		17					
	Maintenance Tech	40000	8	320,000		19					
	Shift Operators	40000	20	800,001		19					
	Yard Employees	25000	12	300,000		12					
	General Manager	100000	0	0		48					
	Clerks & Secretaries	25000	3	75,000		12					
	Total Salaries		54	2,075,002						2.27	4.51
	Overhead/Maint	95%	of Labor & Supervison	2,154,783		37.66	PEP 2003 (uses 37.66)			2.15	4.27
	Maintenance	2%	of TPI	5,081,994			**avg salary (w/ benefits)**			5.08	10.08
	Insurance & Taxes	2.0%	of TPI	5,081,994			78329.35			5.08	10.08
	Costs									**14.59**	**28.94**
	Total Cash Cost									**33.89**	**67.23**
	Annual Capital Charge									**44.72**	**88.72**

Appendix E

Process Parameters & Operation Summary

Energy Efficiencies	
Gasifier Efficiency - HHV %	79.7
Gasifier Efficiency - LHV %	78.2
Overall Plant Efficiency - HHV %	39.5
Overall Plant Efficiency - LHV %	38.4
Dryer	
Inlet:	
Temperature (°F)	60.0
Moisture Content (wt%)	50.0%
Outlet:	
Temperature (°F)	217.9
Moisture Content (wt%)	5.0%
Inlet Flue Gas (°F)	1,306
Outlet Flue Gas (°F)	237.4
Dew Point Flue Gas (°F)	175.4
Difference	62.0
Gasifier	
Temperature (°F)	1,600
Pressure (psia)	438.0
H2:CO Molar Ratio After Gasifier	1.23
Methane (vol%)	13.9%
Benzene (vol%)	0.99%
Tar (wt%)	4.54%
Tar (g/Nm³)	52.7
Char (wt%)	3.8%
H2S (ppm)	448
Residual Heat (MBtu/hr)	15,757
Syngas Usage	
To Reformer (lb/hr)	156,554
To Fuel System (lb/hr)	107,461
Fuel System	
Additional fuel (lb/hr)	0
Raw Syngas (lb/hr)	107,461
Unconverted Syngas (lb/hr)	17,367
Into Reformer (°F)	3,120
Out of Reformer (°F)	2,161
Air Separation Unit	
Air in (lb/hr)	176,280
Liquefaction Compressor Pressure (psia)	132
N2 to Vent (lb/hr)	98,071
N2 to Feed Dryer (lb/hr)	34,856
N2 pressure (psia)	72
O2 to Gasifier	42,281
O2 to Gasifier Pressure (psia)	440

Tar Reformer	
Inlet Molar Flow (MMscf/hr)	8.17
Space Velocity (hr^{-1})	2,476
Reactor Volume (ft³)	3,301
Inlet:	
Temperature (°F)	1,284
Carbon as CO (mol%)	22.0%
Carbon as tar (ppmv)	55,624
H2:CO Ratio (mole)	1.47
Reformer Conversions:	
CO2 --> CO	27.8%
Methane --> CO	46.2%
Methane --> CO (% of equilibrium)	80.9%
Ethane --> CO	99.0%
Benzene --> CO	99.0%
Tar --> CO	99.9%
Ammonia --> CO	78.0%
Ammonia --> CO (% of equilibrium)	90.3%
Outlet:	
Temperature (°F)	1,600
Carbon as CO (mol%)	57.3%
Carbon as tar (ppmv)	352
H2:CO Ratio (mole)	1.20
Methane (vol%)	4.7%
Benzene (ppmv)	25.2
Tars (ppmv)	26
Tars (g/Nm³)	0.09
H2S (ppm)	143
NH3 (ppm)	123
Quench	
Benzene (ppmv)	31.5
Tars (ppmv)	32
Tars (g/Nm³)	0.11
H2S (ppm)	181
NH3 (ppm)	49
Acid Gas Removal	
Inlet:	
CO2 (mol/hr)	3,535
CO2 (mol%)	18.4%
H2S (mol/hr)	3
H2S (ppmv)	181
Outlet:	
CO2 (mol/hr)	829
CO2 (mol%)	5.0%
Fraction CO2 removed	76.5%
H2S (mol/hr)	1
H2S (ppmv)	44
Fraction H2S removed	99.6%

Alcohol Synthesis	
Syngas from Conditioning	268,724
Recycled from initial flash tank	217
Recycled from MolSieve Flush	4,573
Total	273,514
Conditioned Syngas H2:CO Ratio	1.20
Recycled Gas H2:CO Ratio	1.56
At Reactor Inlet	
Temperature (°F)	570
Pressure (psia)	991
H2:CO Molar Ratio	1.20
CO2 (mol %)	5.0%
Methane (mol%)	6.8%
H2O (wt%)	0.86%
Inlet Molar Flow (MMscf/hr)	6.4
Space Velocity (hr^{-1})	6,000
Reactor Volume (ft³)	1,062
CO Conversion - Overall	59.3%
CO Conversion - Singlepass	59.2%
Conversion To:	
CO2	21.9%
Methane	3.4%
Ethane	0.3%
Methanol	0.2%
Ethanol	28.0%
Propanol	4.6%
Butanol	0.6%
Pentanol +	0.1%
Total	59.2%
Selectivity (CO2 Free)	
Alcohols	90.1%
Hydrocarbons	9.9%
At Reactor Outlet	
Temperature (°F)	570
Pressure (psia)	986
CO2 (mol%)	18.6%
Methane (mol%)	11.4%
H2O (wt%)	0.62%
Total Alcohol Productivity (kg/kg/hr)	0.751
Total Ethanol Productivity (kg/kg/hr)	0.609

Alcohol Synthesis	
Relative Alcohol Distribution After Reactor	
Methanol	8.5%
Ethanol	81.7%
Propanol	8.8%
Butanol	0.9%
Pentanol +	0.1%
Flash Separator	
Temperature (°F)	110
Pressure (psia)	972
Relative Alcohol Distribution After Flash Tank	
Methanol	8.3%
Ethanol	81.8%
Propanol	9.0%
Butanol	0.9%
Pentanol +	0.1%
Vapor Losses From Flash Tank	
Methanol	4.8%
Ethanol	2.5%
Propanol	1.0%
Butanol	0.4%
Pentanol +	0.2%
Cleaned Gas Recycled to Reactor	0.1%
Residual Syngas	
Recycled to synthesis reactors (lb/hr)	217
To Tar Reformers (lb/hr)	217,095
To Fuel System (lb/hr)	17,367
To Reformer for Process (lb/hr)	199,726

Alcohol Separation	
Upstream of LP Separator Valve	
Temperature (°F)	110.0
Pressure (psia)	972.0
LP Separator	
Temperature (°F)	98.8
Pressure (psia)	60.0
LP Separator Recoveries (Liquid)	
Methanol	99.4%
Ethanol	99.7%
Propanol	99.9%
Butanol	100.0%
Pentanol +	100.0%
Water	99.9%
Mole Sieve Effluent (mol%)	
H2O	47.5%
Methanol	47.4%
Ethanol	5.1%
Propanol	0.0%
Butanol	0.0%
Pentanol +	0.0%
Relative C3+ Alcohol Distribution	
Methanol	0.0%
Ethanol	7.6%
Propanol	83.0%
Butanol	8.4%
Pentanol +	0.9%
Ethanol Recoveries:	
Initial flash tank	97.5%
LP Separator	99.7%
C2OH/C3OH Splitter	99.0%
Final MeOH Stripper	99.0%
Overall	95.3%

Appendix F

Process Flow Diagrams (PFDs)

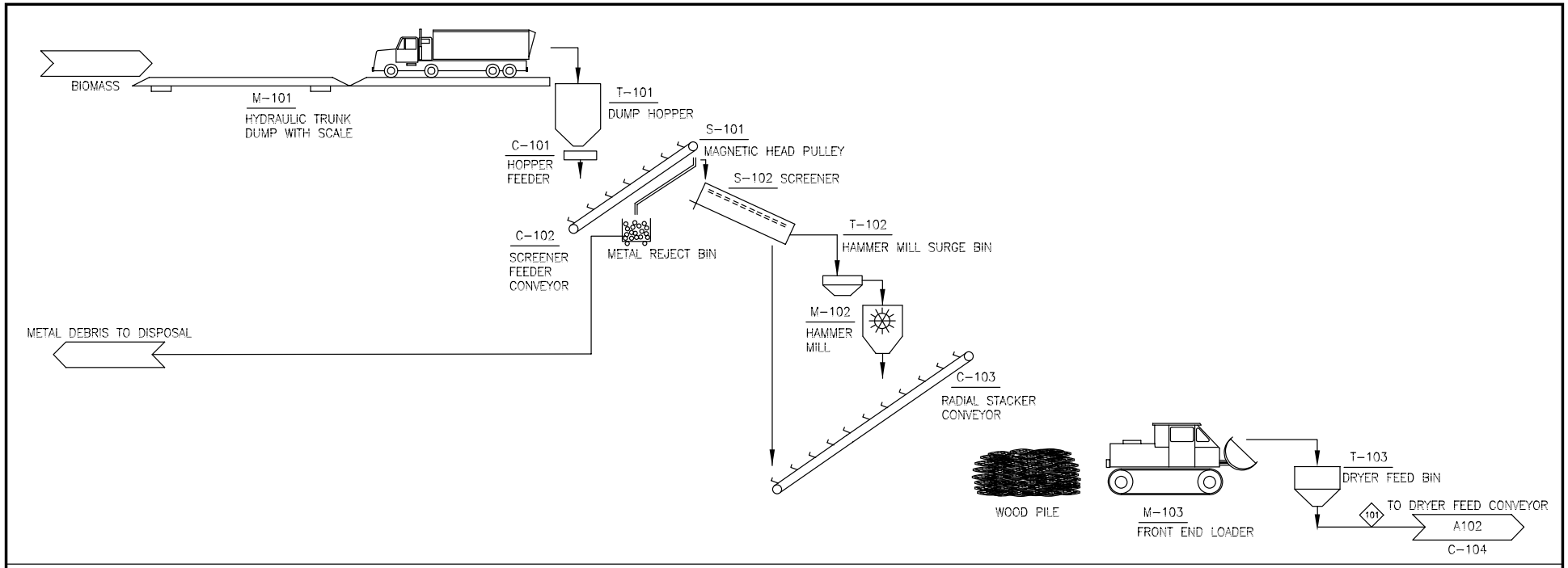

COMPONENT	UNITS	101
Total Flow	lb/hr	367,437
Temperature	F	60
Pressure	Psia	14.7
Vapor Fraction		0.00
Hydrogen	lb/hr	
Water	lb/hr	183,718
Carbon Monoxide	lb/hr	
Nitrogen	lb/hr	
Oxygen	lb/hr	
Argon	lb/hr	
Carbon Dioxide	lb/hr	
Hydrogen Sulfide (H2S)	lb/hr	
SO2	lb/hr	
Ammonia (NH3)	lb/hr	
NO2	lb/hr	
Methane	lb/hr	
isobutane	lb/hr	
n-butane	lb/hr	
ethane (C2H6)	lb/hr	
ethylene (C2H4)	lb/hr	
acetylene (C2H2)	lb/hr	
C3H8	lb/hr	
Pentane +	lb/hr	
Benzene (C6H6)	lb/hr	
Tar (C10H8)	lb/hr	
Carbon (Solid)	lb/hr	
Sulfur (Solid)	lb/hr	
Olivine (Solid)	lb/hr	
MgO (Solid)	lb/hr	
Methanol	lb/hr	
Ethanol	lb/hr	
Propanol	lb/hr	
n-Butanol	lb/hr	
Pentanol+	lb/hr	
Ash	lb/hr	0
Char	lb/hr	0
Wood	lb/hr	183,718
Enthalpy Flow	MMBTU/	-1,694
Average Density	lb/ft^3	

Heat Stream No.	MM BTU/hr	Work Stream No.	HP

Eq. No.	Equipment Name	Req.	Spar	Equipment Type
C-101	Hopper Feeder	4		VIBRATING-FEEDER
C-102	Screener Feeder Conveyor	2		BELT
C-103	Radial Stacker Conveyor	2		BELT
M-101	Hydraulic Truck Dump with Scale	4		TRUCK-SCALE
M-102	Hammermill	2		
M-103	Front End Loaders	3		LOADER
S-101	Magnetic Head Pulley	2		MAGNET
S-102	Screener	2		SCREEN
T-101	Dump Hopper	4		LIVE-BTM-BIN
T-102	Hammermill Surge Bin	1		LIVE-BTM-BIN
T-103	Dryer Feed Bin	2		LIVE-BTM-BIN

VER	DESCRIPTION	DATE
A	Thermochemical Design Report	3-10-04
B		8-25-04
C		9-15-04
D		11-17-04
E	TC Ethanol Design Report	12-17-06
F	HP Gasifier Design Report	02-28-09
		AD 2-28-09

NREL
NATIONAL RENEWABLE ENERGY LABORATORY
National Bioenergy Center

SECTION A100
FEED HANDLING & DRYING

ad20081116e

PFD-P810-A101 F

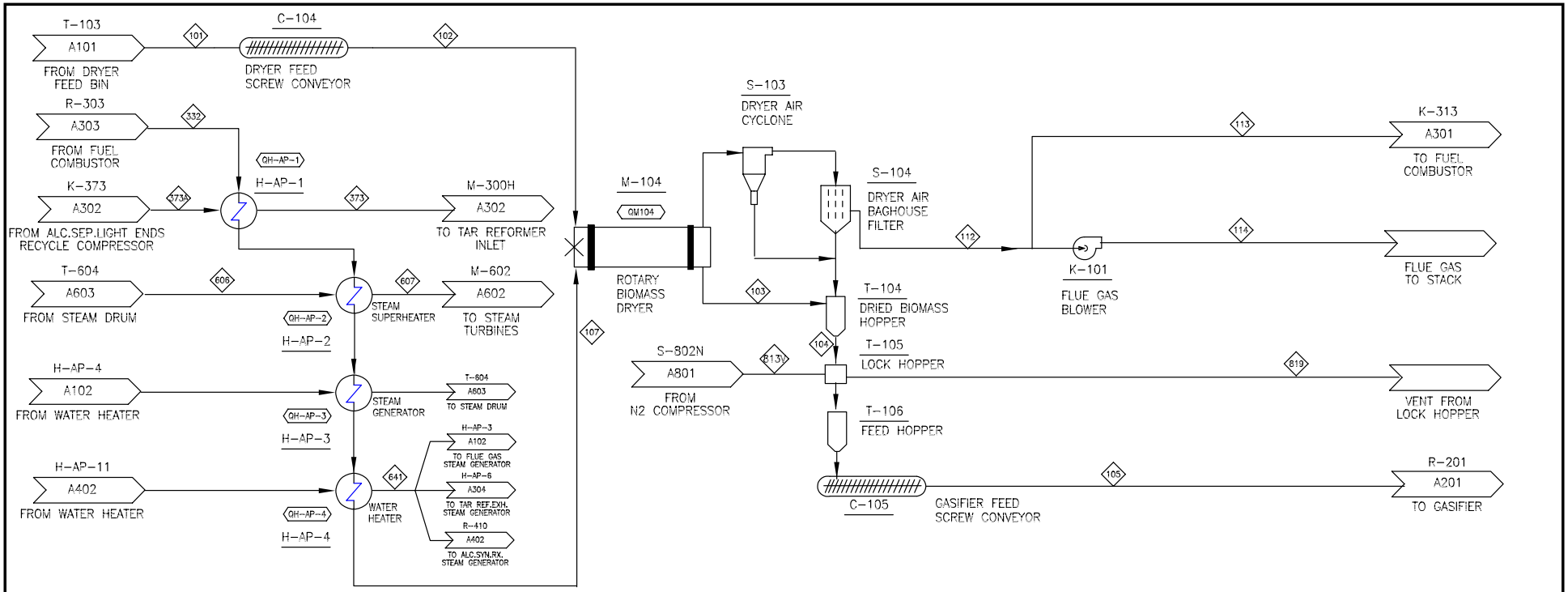

COMPONENT	UNITS	101	102	103	104	105	107	112	113	114	332	373	373A	606	607	641	813V	819
Total Flow	lb/hr	367,437	367,437	193,388	193,388	193,388	716,651	890,700	8,907	881,793	716,651	4,693	4,693	428,864	428,864	437,617	34,375	28,356
Temperature	F	60	60	218	218	218	1,306	237	237	237	2,161	1,200	532	526	900	529	140	140
Pressure	Psia	14.7	15.7	15.7	15.7	440.0	16.4	15.4	15.4	15.4	17.4	435.5	436.0	855.0	850.0	880.0	445.0	445.0
Vapor Fraction		0.00	0.00	0.00	0.00	0.00	1.00	1.00	1.00	1.00	1.00	1.00	1.00	1.00	1.00	0.00	1.00	1.00
Hydrogen	lb/hr											13	13					
Water	lb/hr	183,718	183,718	9,669	9,669	9,669	81,529	255,578	2,556	253,023	81,529	18	18	428,864	428,864	437,617	140	115
Carbon Monoxide	lb/hr											236	236					
Nitrogen	lb/hr						449,002	449,002	4,490	444,512	449,002	6	6				34,209	28,219
Oxygen	lb/hr						23,968	23,968	240	23,728	23,968						4	3
Argon	lb/hr						9,902	9,902	99	9,802	9,902	127	127				0	0
Carbon Dioxide	lb/hr						151,712	151,712	1,517	150,195	151,712	3,609	3,609				23	19
Hydrogen Sulfide (H	lb/hr											4	4					
SO2	lb/hr						127	127	1	126	127							
Ammonia (NH3)	lb/hr											3	3					
NO2	lb/hr						410	410	4	406	410							
Methane	lb/hr											170	170					
isobutane	lb/hr																	
n-butane	lb/hr											39	39					
ethane (C2H6)	lb/hr											9	9					
ethylene (C2H4)	lb/hr																	
acetylene (C2H2)	lb/hr																	
C3H8	lb/hr											179	179					
Pentane +	lb/hr											7	7					
Benzene (C6H6)	lb/hr											0	0					
Tar (C10H8)	lb/hr											0	0					
Carbon (Solid)	lb/hr																	
Sulfur (Solid)	lb/hr																	
Olivine (Solid)	lb/hr						0	0	0	0	0							
MgO (Solid)	lb/hr																	
Methanol	lb/hr											133	133					
Ethanol	lb/hr											130	130					
Propanol	lb/hr											7	7					
n-Butanol	lb/hr											0	0					
Pentanol+	lb/hr											0	0					
Ash	lb/hr	0	0	0	0	0	0	0	0	0	0							
Char	lb/hr	0	0	0	0	0	0	0	0	0	0							
Wood	lb/hr	183,718	183,718	183,718	183,718	183,718	0	0	0	0	0							
Enthalpy Flow	MMBTU	-1,694	-1,694	-481	-481	-481	-805	-2,017	-20	-1,997	-609	-14	-15	-2,433	-2,323	-2,778	0	0
Average Density	lb/ft^3																	

Heat Stream No.	MM BTU/hr
QM104	-218.06
QH-AP-1	1.10
QH-AP-2	109.95
QH-AP-3	4.69
QH-AP-4	80.14

Work Stream No.	HP

Eq. No.	Equipment Name	Req.	Spar	Equipment Type
C-104	Dryer Feed Screw Conveyor	2		SCREW
C-105	Gasifier Feed Screw Conveyor	2		SCREW
H-AP-1	Hot Flue gas /Cold AlcSepLtToRef Exchan	1		SHELL-TUBE
H-AP-2	Hot Flue gas /Cold SteamSuperHt Exchang	1		SHELL-TUBE
H-AP-3	Hot Flue gas /Cold SteamGen Exchanger	1		SHELL-TUBE
H-AP-4	Hot Flue gas /Cold WaterPreHt Exchanger	1		SHELL-TUBE
K-101	Flue Gas Blower	2		CENTRIFUGAL
M-104	Rotary Biomass Dryer	2		ROTARY-DRUM
S-103	Dryer Air Cyclone	2		GAS CYCLONE
S-104	Dryer Air Baghouse Filter	2		FABRIC-FILTER
T-104	Dried Biomass Hopper	2		VERTICAL-VESSEL
T-105	Lock Hopper	2		VERTICAL-VESSEL
T-106	Feed Hopper	2		LIVE-BTM-BIN

VER	DESCRIPTION	DATE
A	Thermochemical Design Report	3-10-04
B		8-25-04
C		9-16-04
D		11-17-04
E	TC Ethanol Design Report	12-17-06
F	HP Gasifier Design Report	02-28-09
		AD 2-28-09

NREL NATIONAL RENEWABLE ENERGY LABORATORY
National Bioenergy Center

SECTION A100
FEED HANDLING & DRYING

ad20081116e | PFD-P810-A102 | F

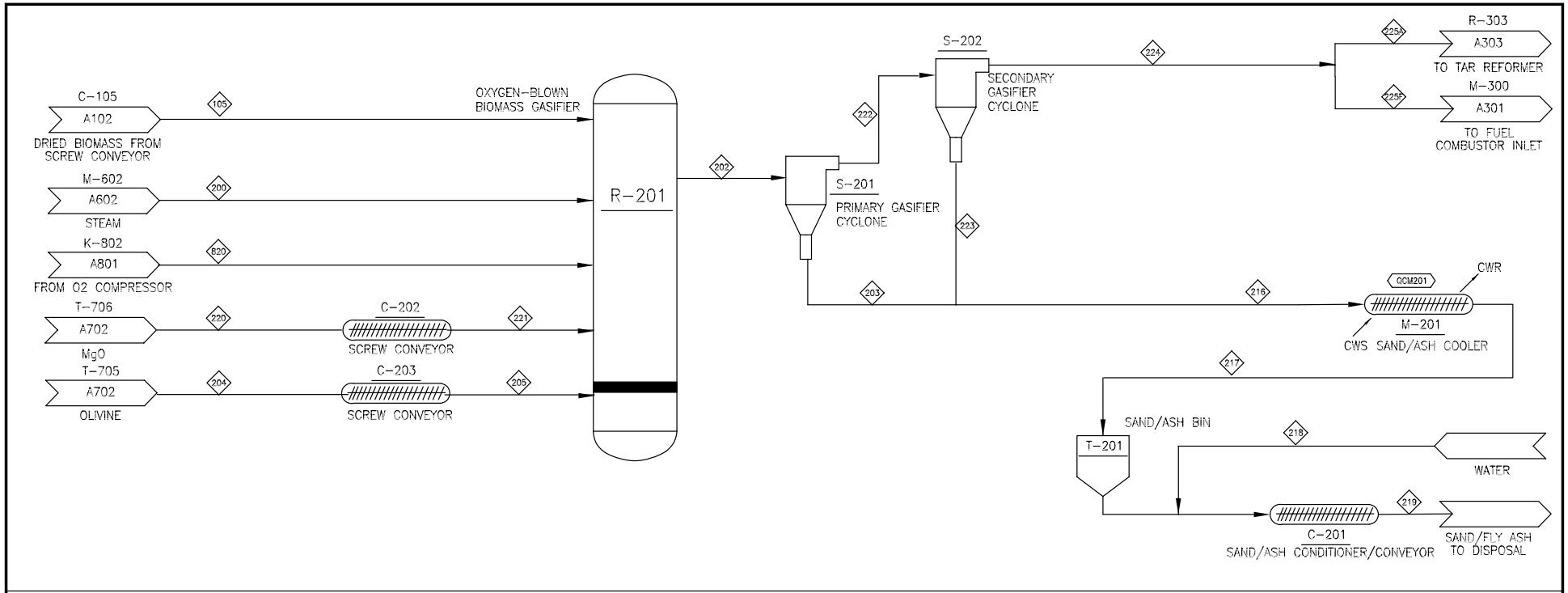

COMPONENT	UNITS	105	200	202	203	204	205	216	217	218	219	220	221	222	223	224	225A	225F	820
Total Flow	lb/hr	193,388	38,678	276,174	12,054	1,821	1,821	12,158	12,158	1,351	13,509	7	7	264,120	104	264,016	156,554	107,461	42,281
Temperature	F	218	769	1,600	77			77	77	60	215	60		1,600	77	1,600	1,600	1,600	370
Pressure	Psia	440.0	490.0	438.0	436.8	1.0	440.0	14.7	14.7	14.7	14.7	25.0	440.0	436.8	436.4	436.4	436.4	436.4	440.0
Vapor Fraction		0.00	1.00	1.00	0.00	0.00	0.00	0.00	0.00	0.00	0.01	0.00	0.00	1.00	0.00	1.00	1.00	1.00	1.00
Hydrogen	lb/hr			3,790										3,790		3,790	2,247	1,543	
Water	lb/hr	9,669	38,678	41,824						1,351	1,351			41,824		41,824	24,800	17,023	
Carbon Monoxide	lb/hr			42,850										42,850		42,850	25,409	17,441	
Nitrogen	lb/hr			74										74		74	44	30	74
Oxygen	lb/hr																		39,980
Argon	lb/hr			2,226										2,226		2,226	1,320	906	2,226
Carbon Dioxide	lb/hr			134,696										134,696		134,696	79,871	54,825	
Hydrogen Sulfide (H	lb/hr			161										161		161	95	65	
SO2	lb/hr																		
Ammonia (NH3)	lb/hr			367										367		367	218	149	
NO2	lb/hr																		
Methane	lb/hr			23,479										23,479		23,479	13,922	9,557	
isobutane	lb/hr																		
n-butane	lb/hr																		
ethane (C2H6)	lb/hr			2,085										2,085		2,085	1,236	849	
ethylene (C2H4)	lb/hr																		
acetylene (C2H2)	lb/hr																		
C3H8	lb/hr																		
Pentane +	lb/hr																		
Benzene (C6H6)	lb/hr			8,116										8,116		8,116	4,813	3,304	
Tar (C10H8)	lb/hr			4,346										4,346		4,346	2,577	1,769	
Carbon (Solid)	lb/hr																		
Sulfur (Solid)	lb/hr																		
Olivine (Solid)	lb/hr			1,828	1,826	1,821	1,821	1,828	1,828		1,828	7	7	2	2	0	0	0	
MgO (Solid)	lb/hr																		
Methanol	lb/hr																		
Ethanol	lb/hr																		
Propanol	lb/hr																		
n-Butanol	lb/hr																		
Pentanol+	lb/hr																		
Ash	lb/hr	0		0	0			0	0		0			0	0	0	0	0	
Char	lb/hr	0		10,331	10,228			10,330	10,330		10,330			103	102	1	1	0	
Wood	lb/hr	183,718		0	0			0	0		0			0	0	0	0	0	
Enthalpy Flow	MMBTU/	-481	-212	-706	2	0	0	2	-4	-9	-13	0	0	-708	0	-708	-420	-288	3
Average Density	lb/ft^3																		

Heat Stream No.	MM BTU/hr	Work Stream No.	HP
QCM201	5.57		

Eq. No.	Equipment Name	Req.	Spar	Equipment Type
C-201	Sand/ash Conditioner/Conveyor	1		SCREW
C-202	MgO Screw Conveyor	1		SCREW
C-203	Olivine Screw Conveyor	1		SCREW
M-201	Sand/ash Cooler	2		MISCELLANEOUS
R-201	Directly Heated Gasifier	2		VERTICAL-VESSEL
S-201	Primary Gasifier Cyclone	2		GAS CYCLONE
S-202	Secondary Gasifier Cyclone	2		GAS CYCLONE
T-201	Sand/ash Bin	1		FLAT-BTM-STORAGE

VER	DESCRIPTION	DATE
A	Thermochemical Design Report	3-10-04
B		8-25-04
C		9-17-04
D		11-17-04
E	TC Ethanol Design Report	12-17-06
F	HP Gasifier Design Report	02-28-09
		AD 2-28-09

NREL National Bioenergy Center
NATIONAL RENEWABLE ENERGY LABORATORY

SECTION A200
GASIFICATION

ad20081116e | PFD-P810-A201 | F

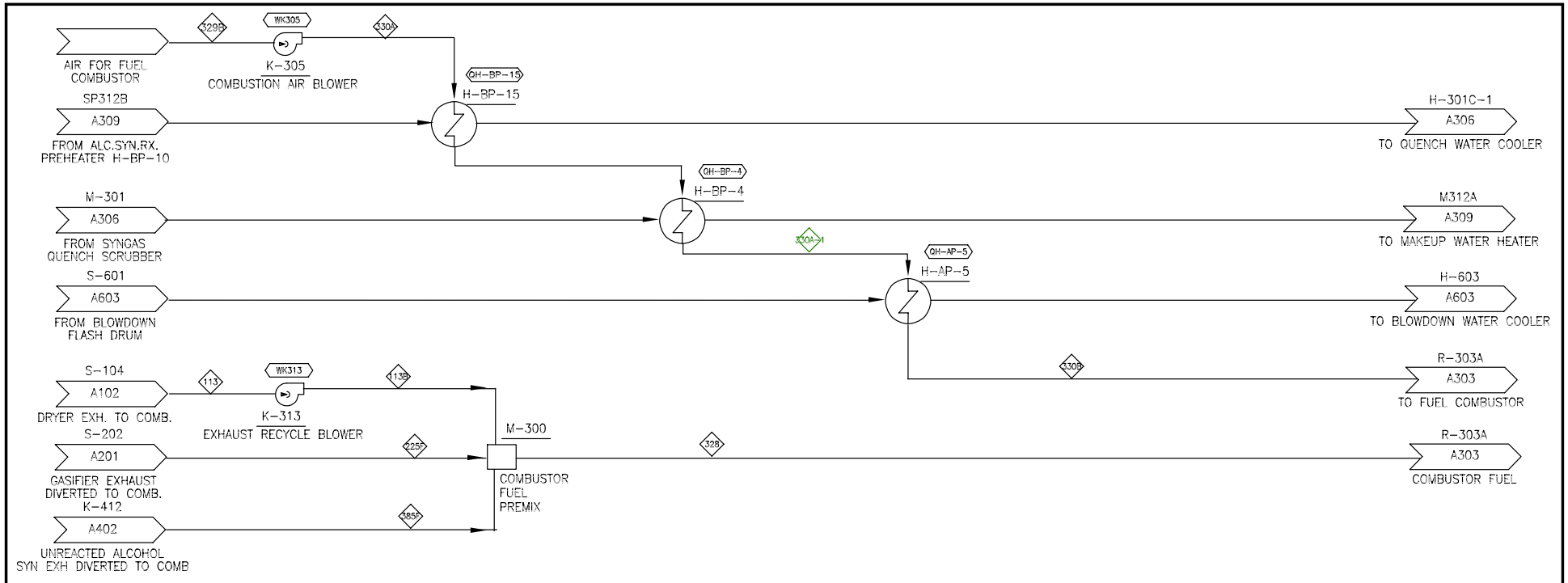

COMPONENT	UNITS	113	113B	225F	328	329B	330A	330A-1	330B	385F
Total Flow	lb/hr	8,907	8,907	107,461	133,736	582,915	582,915	582,915	582,915	17,367
Temperature	F	237	271	1,600	1,495	90	131	298	300	1,273
Pressure	Psia	15.4	17.6	436.4	17.6	14.7	17.6	17.5	17.4	464.7
Vapor Fraction		1.00	1.00	1.00	1.00	1.00	1.00	1.00	1.00	1.00
Hydrogen	lb/hr			1,543	2,193					650
Water	lb/hr	2,556	2,556	17,023	19,581	11,707	11,707	11,707	11,707	2
Carbon Monoxide	lb/hr			17,441	23,217					5,776
Nitrogen	lb/hr	4,490	4,490	30	4,713	444,289	444,289	444,289	444,289	193
Oxygen	lb/hr	240	240		240	119,046	119,046	119,046	119,046	
Argon	lb/hr	99	99	906	2,324	7,578	7,578	7,578	7,578	1,319
Carbon Dioxide	lb/hr	1,517	1,517	54,825	63,876	295	295	295	295	7,534
Hydrogen Sulfide (H	lb/hr			65	67					2
SO2	lb/hr	1	1		1					
Ammonia (NH3)	lb/hr			149	150					1
NO2	lb/hr	4	4		4					
Methane	lb/hr			9,557	11,281					1,725
isobutane	lb/hr				0					
n-butane	lb/hr				5					5
ethane (C2H6)	lb/hr			849	871					22
ethylene (C2H4)	lb/hr									
acetylene (C2H2)	lb/hr									
C3H8	lb/hr				41					41
Pentane +	lb/hr				1					1
Benzene (C6H6)	lb/hr			3,304	3,304					0
Tar (C10H8)	lb/hr			1,769	1,769					0
Carbon (Solid)	lb/hr									
Sulfur (Solid)	lb/hr									
Olivine (Solid)	lb/hr	0	0	0	0					
MgO (Solid)	lb/hr									
Methanol	lb/hr				11					11
Ethanol	lb/hr				82					82
Propanol	lb/hr				5					5
n-Butanol	lb/hr				0					0
Pentanol+	lb/hr				0					0
Ash	lb/hr	0	0	0	0					
Char	lb/hr	0	0	0	0					
Wood	lb/hr	0	0	0	0					
Enthalpy Flow	MMBTU/	-20	-20	-288	-342	-67	-61	-37	-37	-34
Average Density	lb/ft^3									

Heat Stream No.	MM BTU/hr	Work Stream No.	HP
QH-AP-5	0.29	WK305	2299.3
QH-BP-4	9.79	WK313	35.7
QH-BP-15	14.26		

Eq. No.	Equipment Name	Req.	Spar	Equipment Type
H-AP-5	Cold FCAirPreHt /Hot WaterBlw dn Exchan	1		SHELL-TUBE
H-BP-4	Cold FCAirPreHt /Hot Reformate Exchange	1		SHELL-TUBE
H-BP-15	Cold FCAirPreHt /Hot Reformate Exchange	1		SHELL-TUBE
K-305	Regenerator Combustion Air Blow er	1		CENTRIFUGAL
K-313	Blow er for Dryer Exhaust to Fuel Combus	1		ROTARY BLOWER
M-300	Fuel Mix er for Combustor	1		MISCELLANEOUS

VER	DESCRIPTION	DATE
A	Thermochemical Design Report	8-19-04
B		8-25-04
C		9-17-04
D		11-17-04
E	TC Ethanol Design Report	12-17-06
F	HP Gasifier Design Report	02-28-09
		AD 2-28-09

NREL National Bioenergy Center
NATIONAL RENEWABLE ENERGY LABORATORY

SECTION A300
TAR REFORMING, QUENCH & CLEANUP

ad20081116e PFD-P810-A301 F

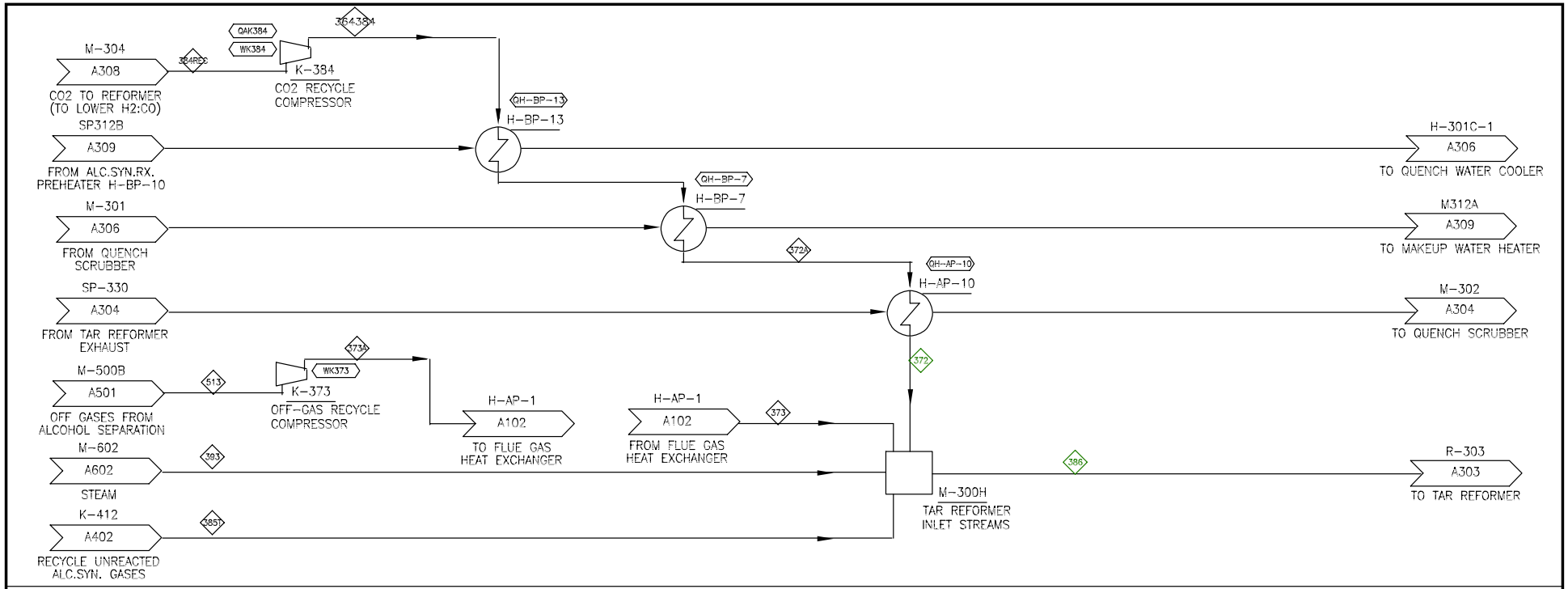

COMPONENT	UNITS	364384	372	372A	373	373A	384REC	385T	386	393	513
Total Flow	lb/hr	45,333	45,333	45,333	4,693	4,693	45,330	199,726	325,315	75,563	4,693
Temperature	F	137	1,200	298	1,200	532	149	1,273	1,127	764	113
Pressure	Psia	435.0	434.0	434.5	435.5	436.0	25.0	464.7	434.0	440.0	40.0
Vapor Fraction		1.00	1.00	1.00	1.00	1.00	1.00	1.00	1.00	1.00	1.00
Hydrogen	lb/hr	0	0	0	13	13		7,475	7,489		13
Water	lb/hr	0	0	0	18	18		19	75,600	75,563	18
Carbon Monoxide	lb/hr	2	2	2	236	236		66,422	66,660		236
Nitrogen	lb/hr	0	0	0	6	6		2,219	2,225		6
Oxygen	lb/hr										
Argon	lb/hr	0	0	0	127	127		15,163	15,291		127
Carbon Dioxide	lb/hr	45,330	45,330	45,330	3,609	3,609	45,329	86,636	135,575		3,609
Hydrogen Sulfide (H	lb/hr	0	0	0	4	4	0	19	23		4
SO2	lb/hr										
Ammonia (NH3)	lb/hr	0	0	0	3	3		12	15		3
NO2	lb/hr										
Methane	lb/hr	0	0	0	170	170		19,834	20,004		170
isobutane	lb/hr										
n-butane	lb/hr	0	0	0	39	39		60	99		39
ethane (C2H6)	lb/hr	0	0	0	9	9		256	266		9
ethylene (C2H4)	lb/hr										
acetylene (C2H2)	lb/hr										
C3H8	lb/hr	0	0	0	179	179		472	651		179
Pentane +	lb/hr	0	0	0	7	7		8	15		7
Benzene (C6H6)	lb/hr	0	0	0	0	0		1	2		0
Tar (C10H8)	lb/hr	0	0	0	0	0		0	0		0
Carbon (Solid)	lb/hr										
Sulfur (Solid)	lb/hr										
Olivine (Solid)	lb/hr										
MgO (Solid)	lb/hr										
Methanol	lb/hr	0	0	0	133	133		131	264		133
Ethanol	lb/hr	0	0	0	130	130		942	1,073		130
Propanol	lb/hr	0	0	0	7	7		55	62		7
n-Butanol	lb/hr	0	0	0	0	0		3	3		0
Pentanol+	lb/hr	0	0	0	0	0		0	0		0
Ash	lb/hr										
Char	lb/hr										
Wood	lb/hr										
Enthalpy Flow	MMBTU/	-174	-161	-173	-14	-15	-174	-387	-976	-414	-16
Average Density	lb/ft^3										

Heat Stream No.	MM BTU/hr
QAK384	6.22
QH-AP-10	11.08
QH-BP-7	0.76
QH-BP-13	1.03

Work Stream No.	HP
WK373	211.0
WK384	2209.9

Eq. No.	Equipment Name	Req.	Spar	Equipment Type
H-AP-10	Hot RefExhQuenc h /Cold RefBleedPreHt E	1		SHELL-TUBE
H-BP-7	Cold RefBleedPreHt /Hot Reformate Ex cha	1		SHELL-TUBE
H-BP-13	Cold RefBleedPreHt /Hot Reformate Ex cha	1		SHELL-TUBE
M-300H	Mixer Prior to Tar Reformer	1		MISCELLANEOUS
K-373	Light-Ends for Alcohol Sep to Reformer C	1		CENTRIFUGAL
K-384	CO2 Recycle into Tar Reformer	1		RECIPROCATING

VER	DESCRIPTION	DATE
A	Thermochemical Design Report	8-19-04
B		8-25-04
C		9-17-04
D		11-17-04
E	TC Ethanol Design Report	12-17-06
F	HP Gasifier Design Report	02-28-09

AD 2-28-09

NREL National Bioenergy Center
NATIONAL RENEWABLE ENERGY LABORATORY

SECTION A300
TAR REFORMING, QUENCH & CLEANUP

ad20081116e PFD-P810-A302 F

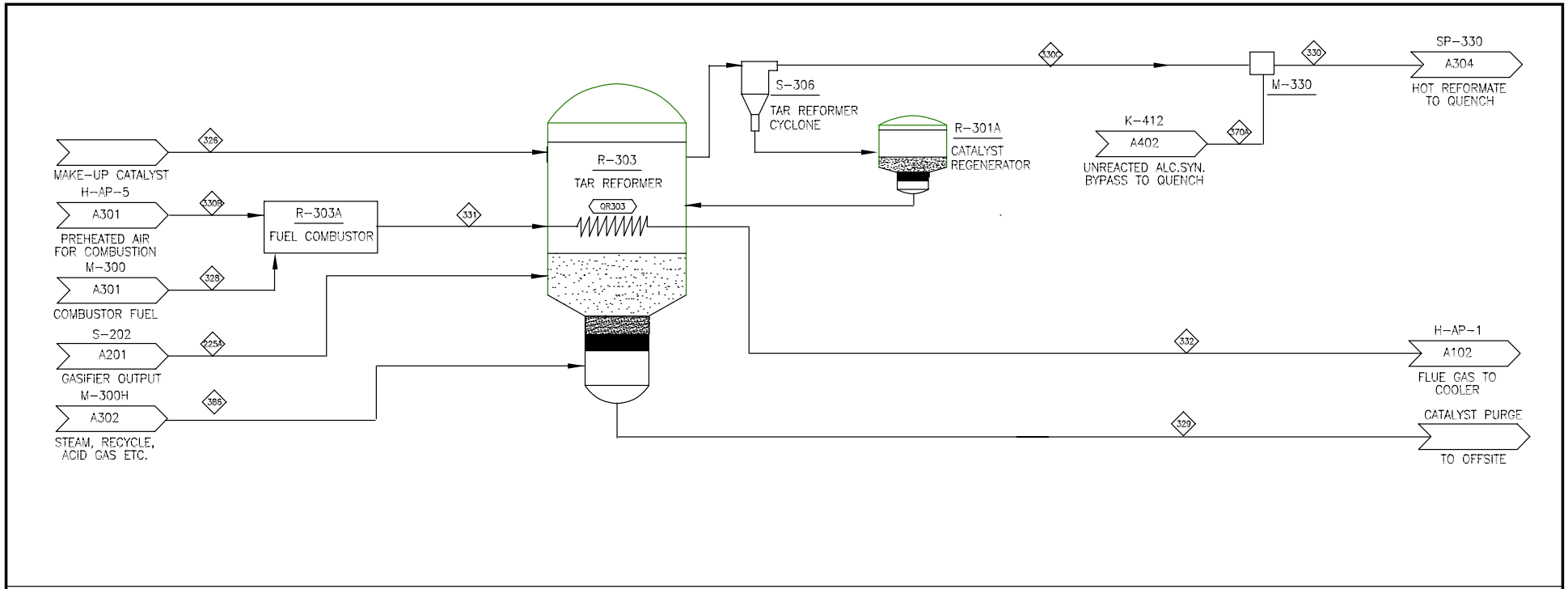

COMPONENT	UNITS	225A	326	328	329	330	330B	330C	331	332	370A	386
Total Flow	lb/hr	156,554	1	133,736	1	481,871	582,915	481,869	716,651	716,651	2	325,315
Temperature	F	1,600		1,495		1,600	300	1,600	3,120	2,161	1,273	1,127
Pressure	Psia	436.4	440.0	17.6	431.0	431.0	17.4	431.0	17.4	17.4	464.7	434.0
Vapor Fraction		1.00	0.00	1.00	0.00	1.00	1.00	1.00	1.00	1.00	1.00	1.00
Hydrogen	lb/hr	2,247		2,193		15,341		15,341			0	7,489
Water	lb/hr	24,800		19,581		94,850	11,707	94,850	81,529	81,529	0	75,600
Carbon Monoxide	lb/hr	25,409		23,217		177,816		177,815			1	66,660
Nitrogen	lb/hr	44		4,713		2,418	444,289	2,418	449,002	449,002	0	2,225
Oxygen	lb/hr			240			119,046		23,968	23,968		
Argon	lb/hr	1,320		2,324		16,611	7,578	16,611	9,902	9,902	0	15,291
Carbon Dioxide	lb/hr	79,871		63,876		155,581	295	155,580	151,712	151,712	1	135,575
Hydrogen Sulfide (H	lb/hr	95		67		119		119			0	23
SO2	lb/hr			1					127	127		
Ammonia (NH3)	lb/hr	218		150		51		51			0	15
NO2	lb/hr			4					410	410		
Methane	lb/hr	13,922		11,281		18,253		18,253			0	20,004
isobutane	lb/hr			0								
n-butane	lb/hr			5		99		99			0	99
ethane (C2H6)	lb/hr	1,236		871		15		15			0	266
ethylene (C2H4)	lb/hr											
acetylene (C2H2)	lb/hr											
C3H8	lb/hr			41		651		651			0	651
Pentane +	lb/hr			1		15		15			0	15
Benzene (C6H6)	lb/hr	4,813		3,304		48		48			0	2
Tar (C10H8)	lb/hr	2,577		1,769		3		3			0	0
Carbon (Solid)	lb/hr											
Sulfur (Solid)	lb/hr											
Olivine (Solid)	lb/hr	0	1	0	1	0		0	0	0		
MgO (Solid)	lb/hr											
Methanol	lb/hr			11		0		0			0	264
Ethanol	lb/hr			82		0		0			0	1,073
Propanol	lb/hr			5		0		0			0	62
n-Butanol	lb/hr			0		0					0	3
Pentanol+	lb/hr			0		0					0	0
Ash	lb/hr	0		0		0		0	0	0		
Char	lb/hr	1		0		1		1	0	0		
Wood	lb/hr	0		0		0		0	0	0		
Enthalpy Flow	MMBTU/	-420	0	-342	0	-1,166	-37	-1,166	-379	-609	0	-976
Average Density	lb/ft^3											

Heat Stream No.	MM BTU/hr	Work Stream No.	HP
QR303	-230.21		

Eq. No.	Equipment Name	Req.	Spar	Equipment Type
M-330	Mixer Prior to Reformate Quench	1		MISCELLANEOUS
R-301A	Tar Reformer Catalyst Regenerator	1		VERTICAL-VESSEL
R-303	Tar Reformer w ith Fuel Combustor	1		VERTICAL-VESSEL
S-306	Tar Reformer Cyclone	1		GAS CYCLONE

VER	DESCRIPTION	DATE
A	Thermochemical Design Report	8-19-04
B		8-25-04
C		9-17-04
D		11-17-04
E	TC Ethanol Design Report	12-17-06
F	HP Gasifier Design Report	03-02-09
		AD 3-02-09

NREL National Bioenergy Center
NATIONAL RENEWABLE ENERGY LABORATORY

SECTION A300
TAR REFORMING, QUENCH & CLEANUP

ad20081116e PFD-P810-A303 F

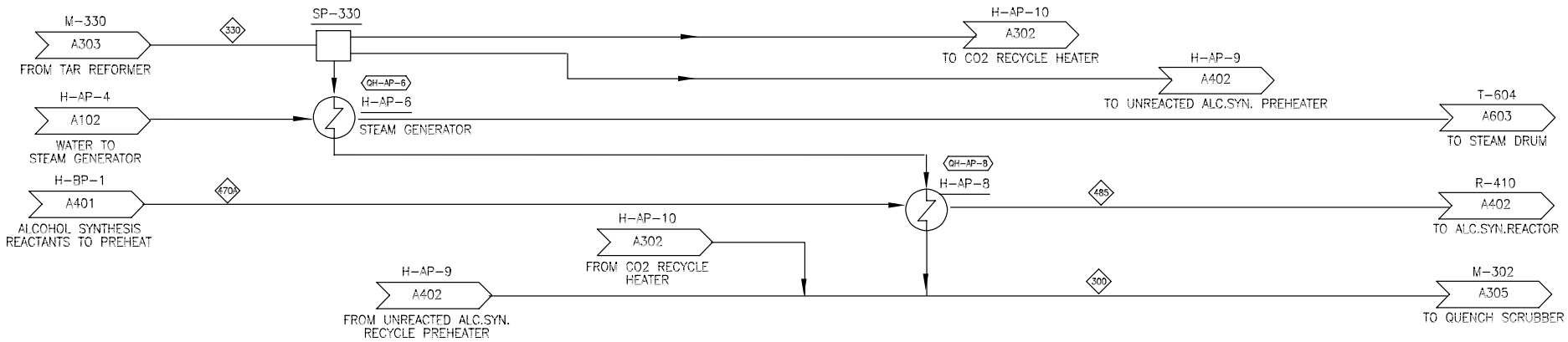

COMPONENT	UNITS	300	330	470A	485
Total Flow	lb/hr	481,871	481,871	273,514	273,514
Temperature	F	320	1,600	298	570
Pressure	Psia	429.0	431.0	991.0	991.0
Vapor Fraction		1.00	1.00	1.00	1.00
Hydrogen	lb/hr	15,341	15,341	15,349	15,349
Water	lb/hr	94,850	94,850	2,359	2,359
Carbon Monoxide	lb/hr	177,816	177,816	177,881	177,881
Nitrogen	lb/hr	2,418	2,418	2,420	2,420
Oxygen	lb/hr				
Argon	lb/hr	16,611	16,611	16,626	16,626
Carbon Dioxide	lb/hr	155,581	155,581	36,597	36,597
Hydrogen Sulfide (H	lb/hr	119	119	26	26
SO2	lb/hr				
Ammonia (NH3)	lb/hr	51	51	22	22
NO2	lb/hr				
Methane	lb/hr	18,253	18,253	18,269	18,269
isobutane	lb/hr				
n-butane	lb/hr	99	99	186	186
ethane (C2H6)	lb/hr	15	15	15	15
ethylene (C2H4)	lb/hr				
acetylene (C2H2)	lb/hr				
C3H8	lb/hr	651	651	753	753
Pentane +	lb/hr	15	15	67	67
Benzene (C6H6)	lb/hr	48	48	47	47
Tar (C10H8)	lb/hr	3	3	2	2
Carbon (Solid)	lb/hr				
Sulfur (Solid)	lb/hr				
Olivine (Solid)	lb/hr	0	0		
MgO (Solid)	lb/hr				
Methanol	lb/hr	0	0	2,505	2,505
Ethanol	lb/hr	0	0	389	389
Propanol	lb/hr	0	0	0	0
n-Butanol	lb/hr	0	0	0	0
Pentanol+	lb/hr	0	0	0	0
Ash	lb/hr	0	0		
Char	lb/hr	1	1		
Wood	lb/hr	0	0		
Enthalpy Flow	MMBTU/	-1,443	-1,166	-476	-441
Average Density	lb/ft^3				

Heat Stream No.	MM BTU/hr	Work Stream No.	HP
QH-AP-6	112.48		
QH-AP-8	35.05		

Eq. No.	Equipment Name	Req.	Spar	Equipment Type
H-AP-6	Hot RefExhQuenc h /Cold SteamGen Ex ch	1		SHELL-TUBE
H-AP-8	Hot RefExhQuenc h /Cold AlcSynPreHt Ex	1		SHELL-TUBE
SP-330	Flow Split Before Reformer Exhaust Quer	1		MISCELLANEOUS

VER	DESCRIPTION	DATE
A	Thermochemical Design Report	8-19-04
B		8-25-04
C		9-17-04
D		11-17-04
E	TC Ethanol Design Report	12-17-06
F	HP Gasifier Design Report	3-02-09
		AD 3-02-09

NREL NATIONAL RENEWABLE ENERGY LABORATORY
National Bioenergy Center

SECTION A300
TAR REFORMING, QUENCH & CLEANUP

ad20081116e PFD-P810-A304 F

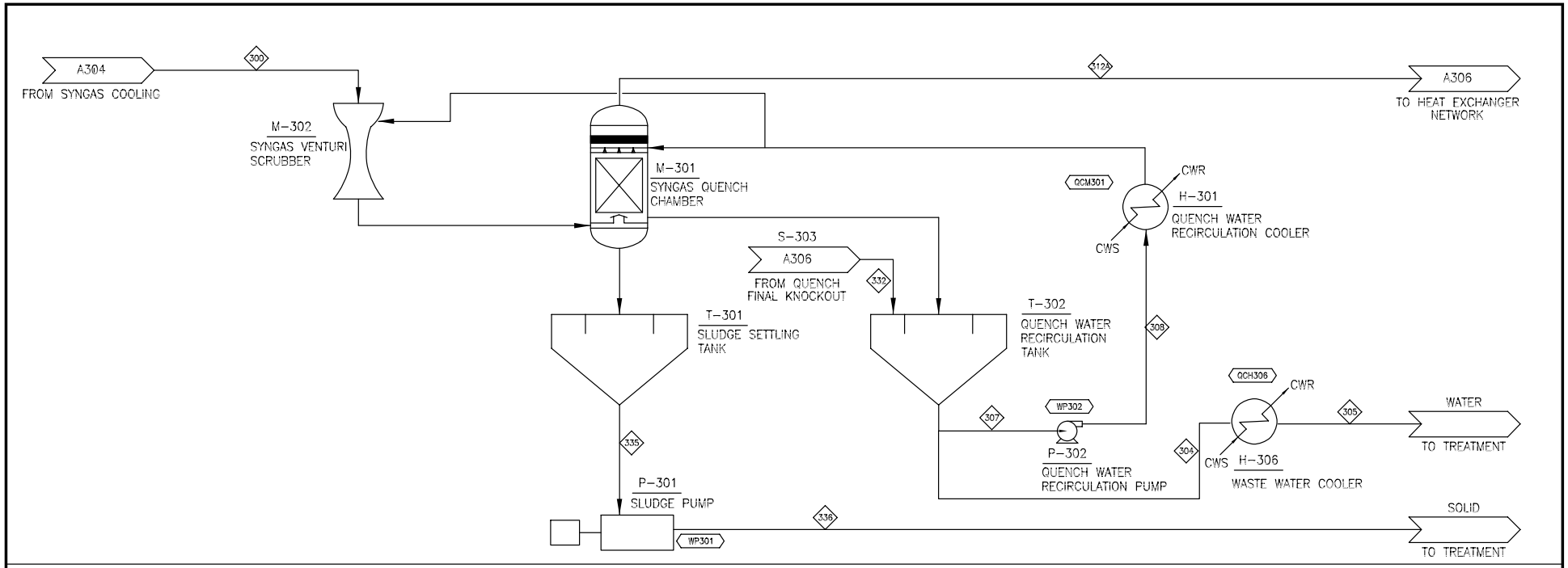

COMPONENT	UNITS	300	304	305	307	308	312A	332	335	336
Total Flow	lb/hr	481,871	2,963	2,963	27,104	27,104	479,735	828	1	1
Temperature	F	320	259	110	259	259	315	110	259	259
Pressure	Psia	429.0	419.0	419.0	419.0	439.0	424.0	419.0	419.0	34.7
Vapor Fraction		1.00	0.00	0.00	0.00	0.00	1.00	0.00	0.00	0.00
Hydrogen	lb/hr	15,341	0	0	0	0	15,341	0		
Water	lb/hr	94,850	2,942	2,942	26,917	26,917	92,734	827	1	1
Carbon Monoxide	lb/hr	177,816	5	5	46	46	177,811	0		
Nitrogen	lb/hr	2,418	0	0	0	0	2,418	0		
Oxygen	lb/hr									
Argon	lb/hr	16,611	1	1	11	11	16,610	0		
Carbon Dioxide	lb/hr	155,581	4	4	36	36	155,577	0		
Hydrogen Sulfide (H	lb/hr	119	0	0	0	0	119	0		
SO2	lb/hr									
Ammonia (NH3)	lb/hr	51	1	1	8	8	51	0		
NO2	lb/hr									
Methane	lb/hr	18,253	5	5	43	43	18,248	0		
isobutane	lb/hr									
n-butane	lb/hr	99	1	1	5	5	99	0		
ethane (C2H6)	lb/hr	15	0	0	0	0	15	0		
ethylene (C2H4)	lb/hr									
acetylene (C2H2)	lb/hr									
C3H8	lb/hr	651	2	2	20	20	649	0		
Pentane +	lb/hr	15	0	0	1	1	15	0		
Benzene (C6H6)	lb/hr	48	1	1	8	8	47	0		
Tar (C10H8)	lb/hr	3	1	1	8	8	2	0		
Carbon (Solid)	lb/hr									
Sulfur (Solid)	lb/hr									
Olivine (Solid)	lb/hr	0							0	0
MgO (Solid)	lb/hr									
Methanol	lb/hr	0	0	0	0	0	0	0		
Ethanol	lb/hr	0	0	0	0	0	0	0		
Propanol	lb/hr	0	0	0	0	0	0	0		
n-Butanol	lb/hr	0	0	0	0	0	0			
Pentanol+	lb/hr	0	0	0	0	0	0			
Ash	lb/hr	0							0	0
Char	lb/hr	1							1	1
Wood	lb/hr	0							0	0
Enthalpy Flow	MMBTU/	-1,443	-20	-20	-179	-179	-1,432	-6	0	0
Average Density	lb/ft^3									

Heat Stream No.	MM BTU/hr	Work Stream No.	HP
QCH306	0.48	WP301	0.0
QCM301	2.85	WP302	1.5

Eq. No.	Equipment Name	Req.	Spar	Equipment Type
H-301	Quench Water Recirculation Cooler	1		SHELL-TUBE
H-306	Waste Water Cooler / Cooling Water	1		SHELL-TUBE
M-301	Syngas Quench Chamber	1		
M-302	Syngas Venturi Scrubber	1		
P-301	Sludge Pump	1	1	CENTRIFUGAL
P-302	Quench Water Recirculation Pump	1	1	CENTRIFUGAL
T-301	Sludge Settling Tank	1		CLARIFIER
T-302	Quench Water Recirculation Tank	1		HORIZONTAL-VESSE

VER	DESCRIPTION	DATE
A	Thermochemical Design Report	3-20-04
B		8-25-04
C		9-17-04
D		11-17-04
E	TC Ethanol Design Report	12-17-06
F	HP Gasifier Design Report	3-02-09
		AD 3-02-09

NREL National Bioenergy Center
NATIONAL RENEWABLE ENERGY LABORATORY

SECTION A300
TAR REFORMING, QUENCH & CLEANUP

ad20081116e | PFD-P810-A305 | F

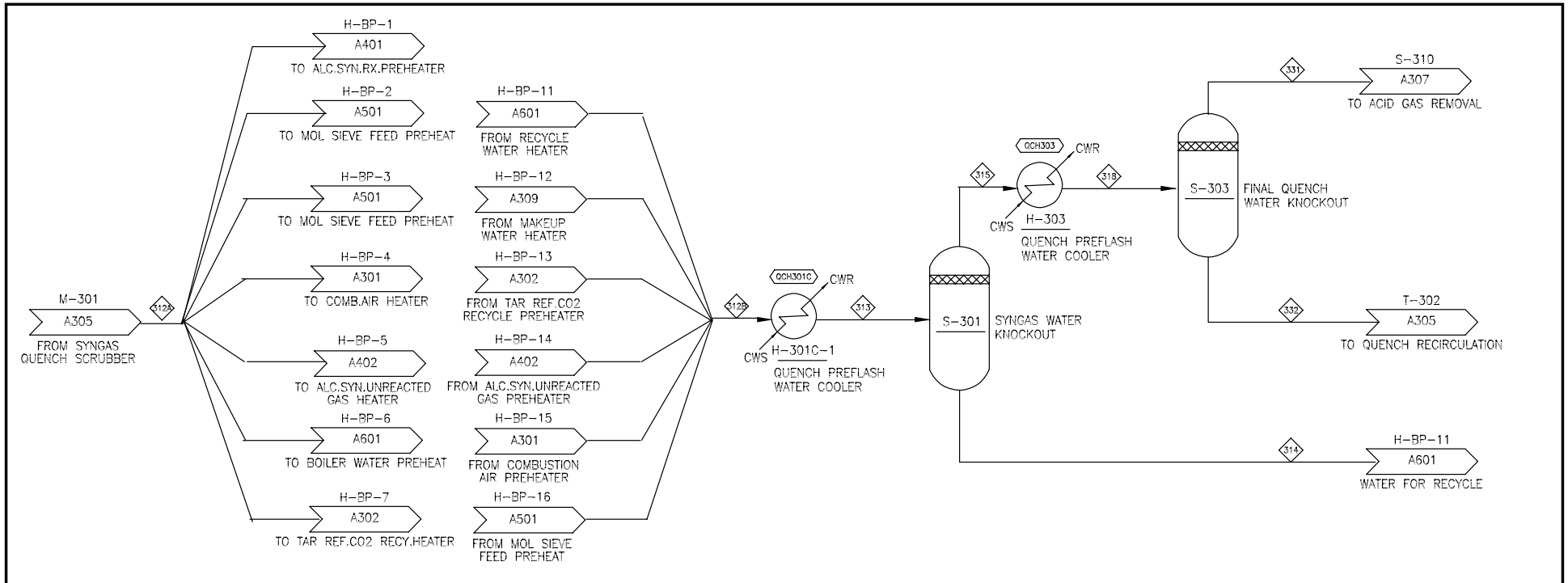

COMPONENT	UNITS	312A	312B	313	314	315	318	331	332
Total Flow	lb/hr	479,735	479,735	479,735	90,840	388,895	388,895	388,067	828
Temperature	F	315	172	130	130	130	110	110	110
Pressure	Psia	424.0	424.0	424.0	424.0	424.0	419.0	419.0	419.0
Vapor Fraction		1.00	0.80	0.79		1.00	1.00	1.00	
Hydrogen	lb/hr	15,341	15,341	15,341	0	15,341	15,341	15,341	0
Water	lb/hr	92,734	92,734	92,734	90,783	1,951	1,951	1,124	827
Carbon Monoxide	lb/hr	177,811	177,811	177,811	0	177,811	177,811	177,811	0
Nitrogen	lb/hr	2,418	2,418	2,418	0	2,418	2,418	2,418	0
Oxygen	lb/hr								
Argon	lb/hr	16,610	16,610	16,610	0	16,609	16,609	16,609	0
Carbon Dioxide	lb/hr	155,577	155,577	155,577	21	155,556	155,556	155,556	0
Hydrogen Sulfide (H2S)	lb/hr	119	119	119	0	118	118	118	0
SO2	lb/hr								
Ammonia (NH3)	lb/hr	51	51	51	34	16	16	16	0
NO2	lb/hr								
Methane	lb/hr	18,248	18,248	18,248	0	18,248	18,248	18,248	0
isobutane	lb/hr								
n-butane	lb/hr	99	99	99	0	99	99	99	0
ethane (C2H6)	lb/hr	15	15	15	0	15	15	15	0
ethylene (C2H4)	lb/hr								
acetylene (C2H2)	lb/hr								
C3H8	lb/hr	649	649	649	0	649	649	649	0
Pentane +	lb/hr	15	15	15	0	15	15	15	0
Benzene (C6H6)	lb/hr	47	47	47	0	47	47	47	0
Tar (C10H8)	lb/hr	2	2	2	0	2	2	2	0
Carbon (Solid)	lb/hr								
Sulfur (Solid)	lb/hr								
Olivine (Solid)	lb/hr								
MgO (Solid)	lb/hr								
Methanol	lb/hr	0	0	0	0	0	0	0	0
Ethanol	lb/hr	0	0	0	0	0	0	0	0
Propanol	lb/hr	0	0	0	0	0	0	0	0
n-Butanol	lb/hr	0	0	0	0	0	0	0	
Pentanol+	lb/hr	0	0	0		0	0	0	
Ash	lb/hr								
Char	lb/hr								
Wood	lb/hr								
Enthalpy Flow	MMBTU/	-1,432	-1,547	-1,561	-618	-943	-947	-941	-6
Average Density	lb/ft^3								

Heat Stream No.	MM BTU/hr	Work Stream No.	HP
QCH301C	14.02		
QCH303	3.80		

Eq. No.	Equipment Name	Req.	Spar	Equipment Type
H-301C-1	Pre-syngas w ater knockout, w ater-coole	1		SHELL-TUBE
H-303	Water-cooled Aftercooler	1		SHELL-TUBE
S-301	Syngas Recycle Water Knockout Vessel	1		KNOCK-OUT DRUM
S-303	Pre-Amine System Knock-out	1		KNOCK-OUT DRUM

VER	DESCRIPTION	DATE
A	Thermochemical Design Report	8-19-04
B		8-25-04
C		9-17-04
D		11-17-04
E	TC Ethanol Design Report	12-17-06
F	HP Gasifier Design Report	3-02-09
		AD 3-02-09

NREL NATIONAL RENEWABLE ENERGY LABORATORY
National Bioenergy Center

SECTION A300
TAR REFORMING, QUENCH & CLEANUP

ad20081116e PFD-P810-A306 F

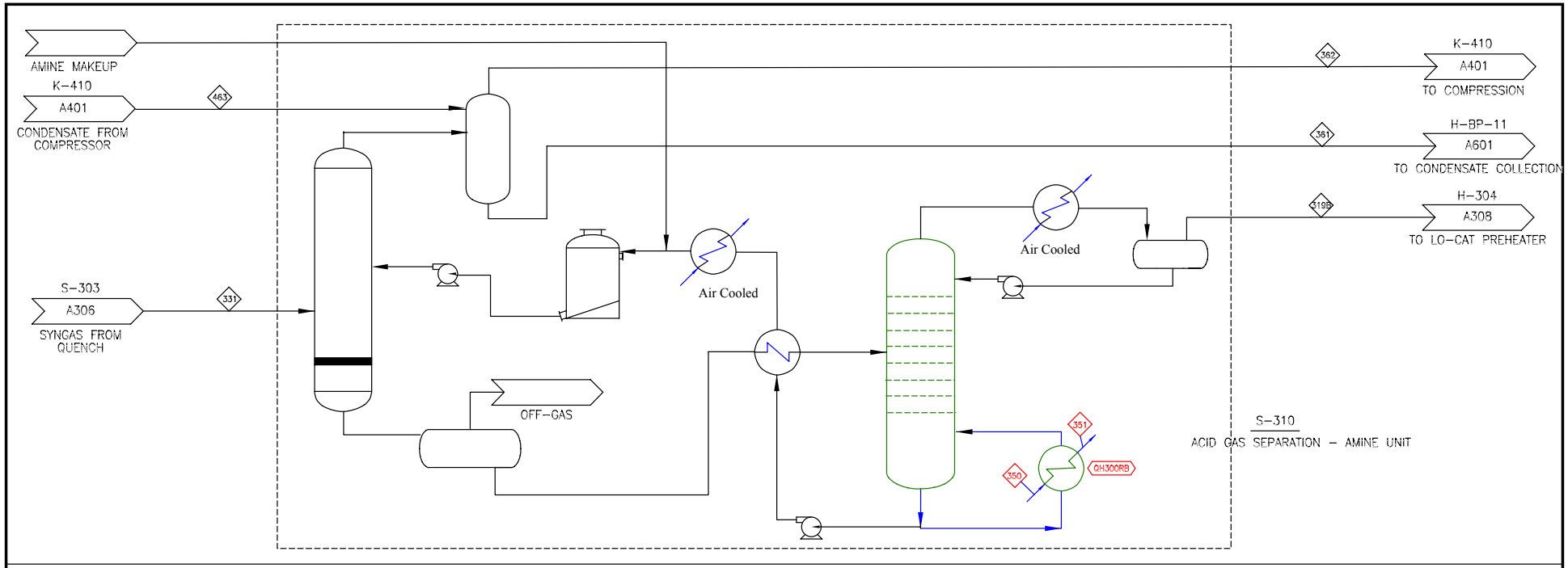

COMPONENT	UNITS	319B	331	350	351	361	362	463
Total Flow	lb/hr	119,165	388,067	272,907	272,907	176	268,724	
Temperature	F	140	110	395	230	110	110	
Pressure	Psia	35.0	419.0	64.7	59.7	414.0	414.0	
Vapor Fraction		1.00	1.00	1.00			1.00	
Hydrogen	lb/hr		15,341			0	15,341	
Water	lb/hr		1,124	272,907	272,907	176	949	
Carbon Monoxide	lb/hr		177,811			0	177,809	
Nitrogen	lb/hr		2,418			0	2,418	
Oxygen	lb/hr							
Argon	lb/hr		16,609			0	16,609	
Carbon Dioxide	lb/hr	119,072	155,556			0	36,484	
Hydrogen Sulfide (H	lb/hr	94	118			0	25	
SO2	lb/hr							
Ammonia (NH3)	lb/hr		16			0	16	
NO2	lb/hr							
Methane	lb/hr		18,248			0	18,248	
isobutane	lb/hr							
n-butane	lb/hr		99			0	99	
ethane (C2H6)	lb/hr		15			0	15	
ethylene (C2H4)	lb/hr							
acetylene (C2H2)	lb/hr							
C3H8	lb/hr		649			0	649	
Pentane +	lb/hr		15				15	
Benzene (C6H6)	lb/hr		47			0	47	
Tar (C10H8)	lb/hr		2			0	2	
Carbon (Solid)	lb/hr							
Sulfur (Solid)	lb/hr							
Olivine (Solid)	lb/hr							
MgO (Solid)	lb/hr							
Methanol	lb/hr		0			0	0	
Ethanol	lb/hr		0			0	0	
Propanol	lb/hr		0			0	0	
n-Butanol	lb/hr		0				0	
Pentanol+	lb/hr		0				0	
Ash	lb/hr							
Char	lb/hr							
Wood	lb/hr							
Enthalpy Flow	MMBTU/	-457	-941	-1,539	-1,821	-1	-482	
Average Density	lb/ft^3							

Heat Stream No.	MM BTU/hr	Work Stream No.	HP
QH300RB	281.54		

Eq. No.	Equipment Name	Req.	Spar	Equipment Type
S-310	L.P. Amine System	1		ABSORBER

VER	DESCRIPTION	DATE
A	Thermochemical Design Report	3-20-04
B		8-25-04
C		9-17-04
D		11-17-04
E	TC Ethanol Design Report	12-17-06
F	HP Gasifier Design Report	3-02-09
		AD 3-02-09

NREL National Bioenergy Center
NATIONAL RENEWABLE ENERGY LABORATORY

SECTION A300
TAR REFORMING, QUENCH & CLEANUP

ad20081116e | PFD-P810-A307 | F

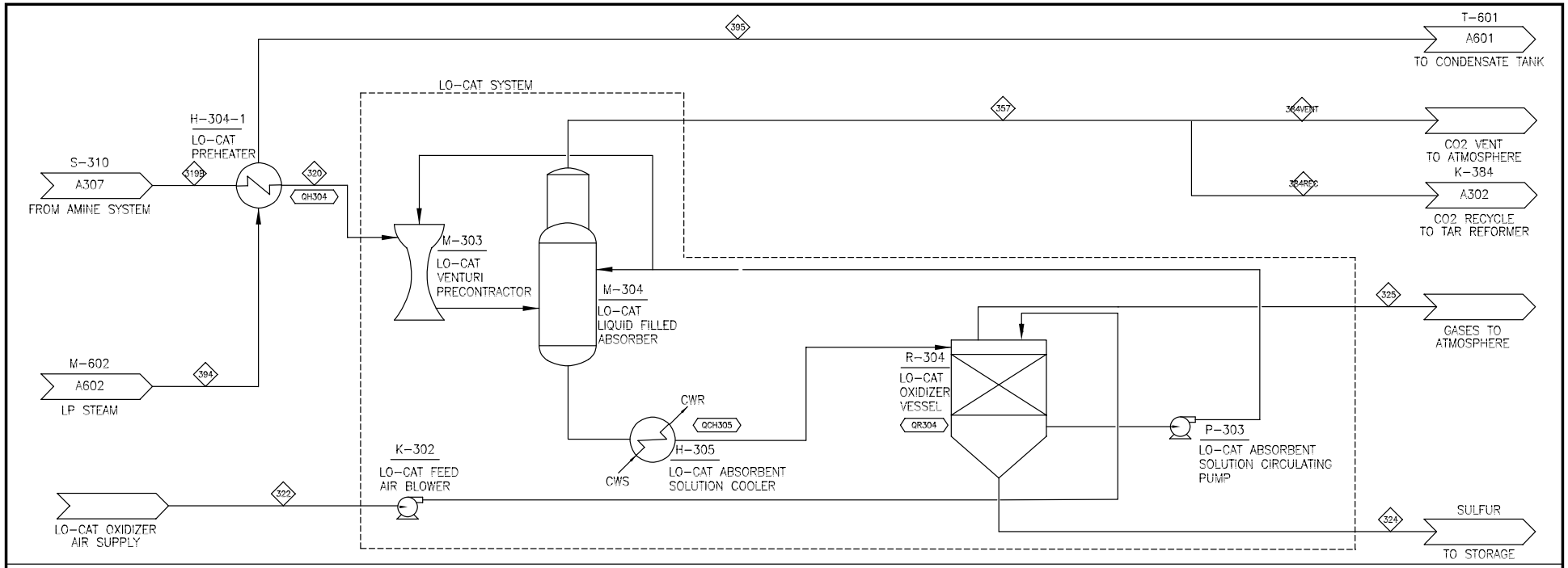

COMPONENT	UNITS	319B	320	322	324	325	357	384REC	384VENT	394	395
Total Flow	lb/hr	119,165	119,165	211	87	217	119,072	45,330	73,743	259	259
Temperature	F	140	150	90		110	149	149	149	395	230
Pressure	Psia	35.0	30.0	14.7	14.7	14.7	25.0	25.0	25.0	64.7	59.7
Vapor Fraction		1.00	1.00	1.00		0.72	1.00	1.00	1.00	1.00	
Hydrogen	lb/hr										
Water	lb/hr			4		53				259	259
Carbon Monoxide	lb/hr										
Nitrogen	lb/hr			156		156					
Oxygen	lb/hr			48		4					
Argon	lb/hr			3		3					
Carbon Dioxide	lb/hr	119,072	119,072	0		0	119,072	45,329	73,742		
Hydrogen Sulfide (H	lb/hr	94	94				1	0	1		
SO2	lb/hr										
Ammonia (NH3)	lb/hr										
NO2	lb/hr										
Methane	lb/hr										
isobutane	lb/hr										
n-butane	lb/hr										
ethane (C2H6)	lb/hr										
ethylene (C2H4)	lb/hr										
acetylene (C2H2)	lb/hr										
C3H8	lb/hr										
Pentane +	lb/hr										
Benzene (C6H6)	lb/hr										
Tar (C10H8)	lb/hr										
Carbon (Solid)	lb/hr										
Sulfur (Solid)	lb/hr				87						
Olivine (Solid)	lb/hr										
MgO (Solid)	lb/hr										
Methanol	lb/hr										
Ethanol	lb/hr										
Propanol	lb/hr										
n-Butanol	lb/hr										
Pentanol+	lb/hr										
Ash	lb/hr										
Char	lb/hr										
Wood	lb/hr										
Enthalpy Flow	MMBTU/	-457	-456	0	0	0	-456	-174	-283	-1	-2
Average Density	lb/ft^3										

Heat Stream No.	MM BTU/hr	Work Stream No.	HP
QCH305	0.02		
QH304	-0.27		
QR304	0.31		

Eq. No.	Equipment Name	Req.	Spar	Equipment Type
H-304-1	LO-CAT Preheater/Steam	1		SHELL-TUBE
H-305	LO-CAT Absorbent Solution Cooler	1		SHELL-TUBE
K-302	LO-CAT Feed Air Blow er	1		CENTRIFUGAL
M-303	LO-CAT Venturi Precontactor	1		
M-304	LO-CAT Liquid-filled Absorber	1		ABSORBER
P-303	LO-CAT Absorbent Solution Circulating Pu	1	1	CENTRIFUGAL
R-304	LO-CAT Oxidizer Vessel	1		VERTICAL-VESSEL

VER	DESCRIPTION	DATE
A	Thermochemical Design Report	8-23-04
B		8-25-04
C		9-17-04
D		11-17-04
E	TC Ethanol Design Report	12-17-06
F	HP Gasifier Design Report	3-02-09
		AD 3-02-09

NREL National Bioenergy Center
NATIONAL RENEWABLE ENERGY LABORATORY

SECTION A300
TAR REFORMING, QUENCH & CLEANUP

ad20081116e PFD-P810-A308 F

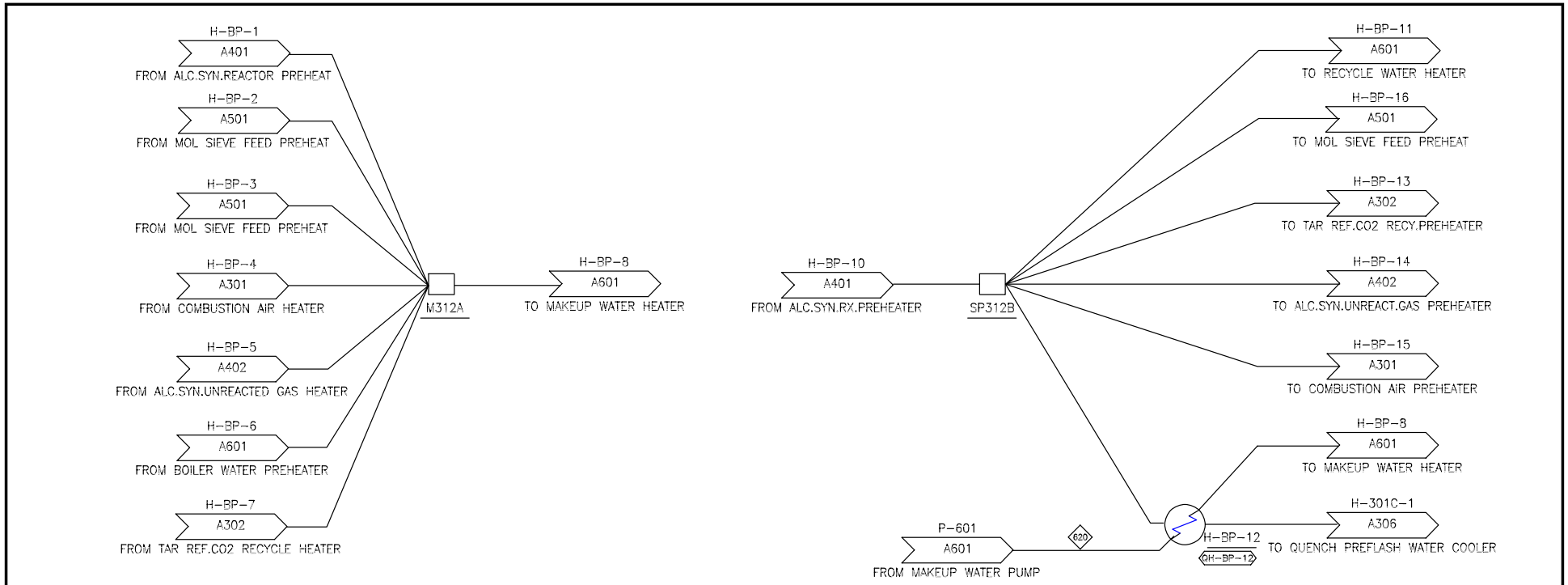

COMPONENT	UNITS	620
Total Flow	lb/hr	32,032
Temperature	F	60
Pressure	Psia	24.7
Vapor Fraction		
Hydrogen	lb/hr	
Water	lb/hr	32,032
Carbon Monoxide	lb/hr	
Nitrogen	lb/hr	
Oxygen	lb/hr	
Argon	lb/hr	
Carbon Dioxide	lb/hr	
Hydrogen Sulfide (H	lb/hr	
SO2	lb/hr	
Ammonia (NH3)	lb/hr	
NO2	lb/hr	
Methane	lb/hr	
isobutane	lb/hr	
n-butane	lb/hr	
ethane (C2H6)	lb/hr	
ethylene (C2H4)	lb/hr	
acetylene (C2H2)	lb/hr	
C3H8	lb/hr	
Pentane +	lb/hr	
Benzene (C6H6)	lb/hr	
Tar (C10H8)	lb/hr	
Carbon (Solid)	lb/hr	
Sulfur (Solid)	lb/hr	
Olivine (Solid)	lb/hr	
MgO (Solid)	lb/hr	
Methanol	lb/hr	
Ethanol	lb/hr	
Propanol	lb/hr	
n-Butanol	lb/hr	
Pentanol+	lb/hr	
Ash	lb/hr	
Char	lb/hr	
Wood	lb/hr	
Enthalpy Flow	MMBTU/	-219
Average Density	lb/ft^3	

Heat Stream No.	MM BTU/hr	Work Stream No.	HP
QH-BP-12	5.45		

Eq. No.	Equipment Name	Req.	Spar	Equipment Type
H-BP-12	Cold Water /Hot Reformate Exchanger	1		SHELL-TUBE
M-312A	Mixer In Syngas Quench Exchangers Trai	1		MISCELLANEOUS
SP-312B	Flow Split In Syngas Quench Exchangers	1		MISCELLANEOUS

VER	DESCRIPTION	DATE
A	Thermochemical Design Report	8-19-04
B		8-25-04
C		9-17-04
D		11-17-04
E	TC Ethanol Design Report	12-17-06
F	HP Gasifier Design Report	3-02-09
		AD 3-02-09

NREL NATIONAL RENEWABLE ENERGY LABORATORY
National Bioenergy Center

SECTION A300
TAR REFORMING, QUENCH & CLEANUP

ad20081116e PFD-P810-A309 F

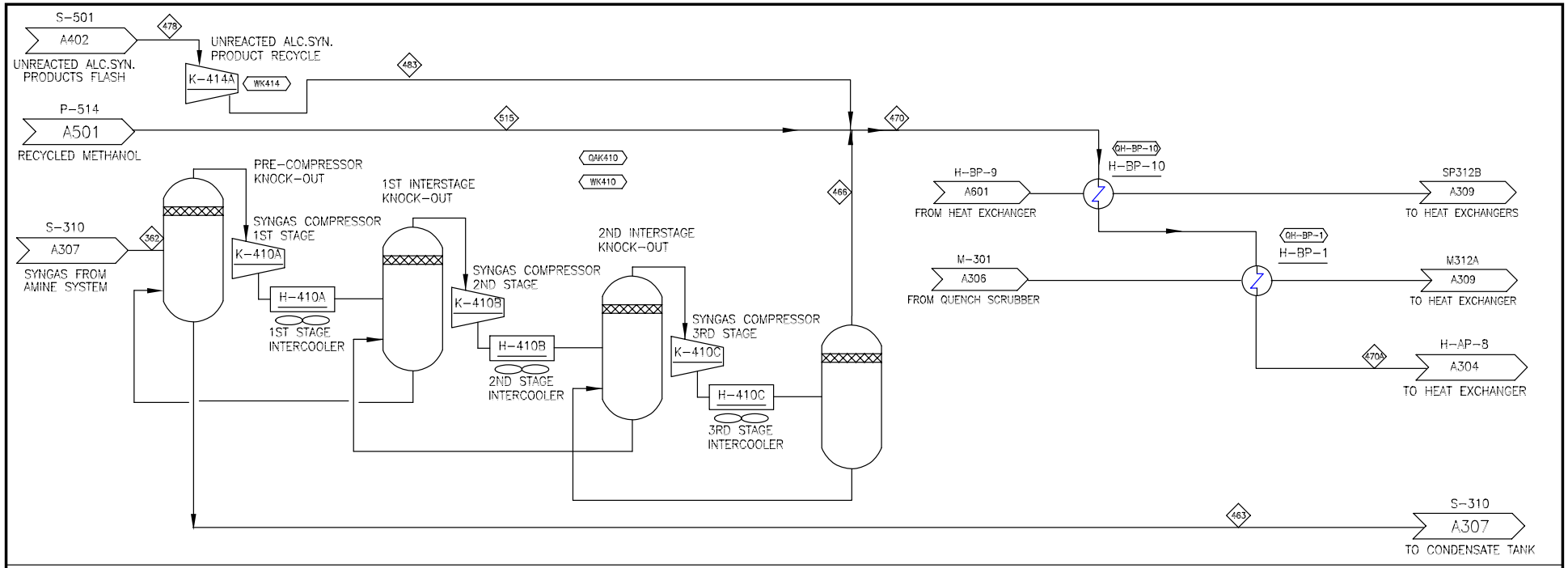

COMPONENT	UNITS	362	463	466	470	470A	478	483	515
Total Flow	lb/hr	268,724		268,724	273,514	273,514	217	217	4,573
Temperature	F	110		207	185	298	110	114	153
Pressure	Psia	414.0		1,000.0	993.0	991.0	972.0	993.0	1,000.0
Vapor Fraction		1.00	0.00	1.00	1.00	1.00	1.00	1.00	0.00
Hydrogen	lb/hr	15,341		15,341	15,349	15,349	8	8	0
Water	lb/hr	949		949	2,359	2,359	0	0	1,411
Carbon Monoxide	lb/hr	177,809		177,809	177,881	177,881	72	72	0
Nitrogen	lb/hr	2,418		2,418	2,420	2,420	2	2	0
Oxygen	lb/hr								
Argon	lb/hr	16,609		16,609	16,626	16,626	16	16	0
Carbon Dioxide	lb/hr	36,484		36,484	36,597	36,597	94	94	19
Hydrogen Sulfide (H	lb/hr	25		25	26	26	0	0	1
SO2	lb/hr								
Ammonia (NH3)	lb/hr	16		16	22	22	0	0	6
NO2	lb/hr								
Methane	lb/hr	18,248		18,248	18,269	18,269	22	22	0
isobutane	lb/hr								
n-butane	lb/hr	99		99	186	186	0	0	87
ethane (C2H6)	lb/hr	15		15	15	15	0	0	0
ethylene (C2H4)	lb/hr								
acetylene (C2H2)	lb/hr								
C3H8	lb/hr	649		649	753	753	1	1	104
Pentane +	lb/hr	15		15	67	67	0	0	52
Benzene (C6H6)	lb/hr	47		47	47	47	0	0	0
Tar (C10H8)	lb/hr	2		2	2	2	0	0	
Carbon (Solid)	lb/hr								
Sulfur (Solid)	lb/hr								
Olivine (Solid)	lb/hr								
MgO (Solid)	lb/hr								
Methanol	lb/hr	0		0	2,505	2,505	0	0	2,505
Ethanol	lb/hr	0		0	389	389	1	1	388
Propanol	lb/hr	0		0	0	0	0	0	0
n-Butanol	lb/hr	0		0	0	0	0	0	
Pentanol+	lb/hr	0		0	0	0	0	0	
Ash	lb/hr								
Char	lb/hr								
Wood	lb/hr								
Enthalpy Flow	MMBTU/	-482		-471	-490	-476	-1	-1	-19
Average Density	lb/ft^3								

Heat Stream No.	MM BTU/hr
QAK410	12.31
QH-BP-1	7.63
QH-BP-10	6.68

Work Stream No.	HP
WK410	9167.3
WK414	0.1

Eq. No.	Equipment Name	Req.	Spar	Equipment Type
H-BP-1	Hot Reformate /Cold Alc SynPreHt Exchan	1		SHELL-TUBE
H-BP-10	Hot Reformate /Cold Alc SynPreHt Exchan	1		SHELL-TUBE
K-410	Mixed Alcohol Gas Compressor	1		CENTRIFUGAL
K-414A	Mixed Alcohol Recycle Gas Compressor	1		RECIPROCATING

VER	DESCRIPTION	DATE
A	Thermochemical Design Report	8-24-04
B		8-25-04
C		8-17-04
D		11-17-04
E	TC Ethanol Design Report	12-17-06
F	HP Gasifier Design Report	3-02-09
		AD 3-02-09

NREL National Bioenergy Center
NATIONAL RENEWABLE ENERGY LABORATORY

SECTION A400
MIXED ALCOHOL SYNTHESIS

ad20081116e PFD-P810-A401 F

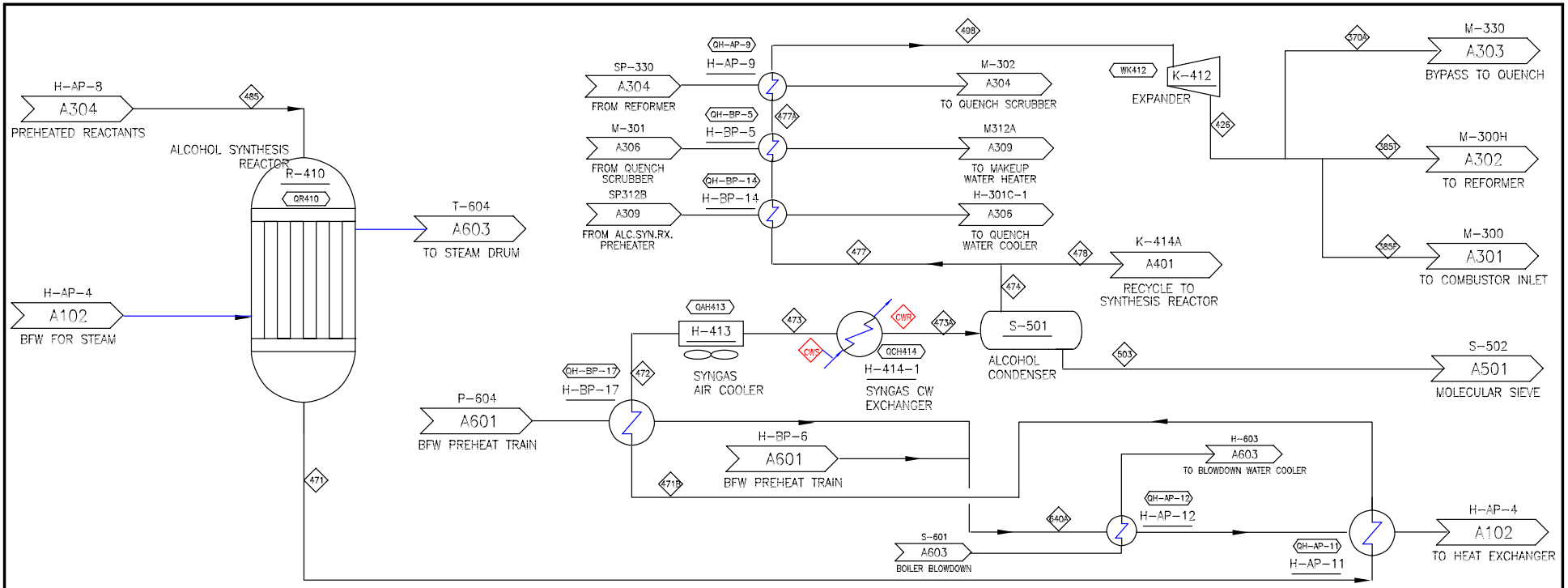

COMPONENT	UNITS	370A	385F	385T	426	471	471B	472	473	473A	474	477	477A	478	485	498	503	640A
Total Flow	lb/hr	2	17,367	199,726	217,095	273,514	273,514	273,514	273,514	273,514	217,313	217,095	217,095	217	273,514	217,095	56,202	437,617
Temperature	F	1,273	1,273	1,273	1,273	570	315	275	140	110	110	110	298	110	570	1,500	110	298
Pressure	Psia	464.7	464.7	464.7	464.7	986.0	981.0	981.0	979.0	974.0	972.0	972.0	967.0	972.0	991.0	967.0	972.0	880.0
Vapor Fraction		1.00	1.00	1.00	1.00	1.00	1.00	0.98	0.90	0.89	1.00	1.00	1.00	1.00	1.00	1.00		
Hydrogen	lb/hr	0	650	7,475	8,125	8,147	8,147	8,147	8,147	8,147	8,134	8,125	8,125	8	15,349	8,125	13	
Water	lb/hr	0	2	19	20	1,705	1,705	1,705	1,705	1,705	20	20	20	0	2,359	20	1,684	437,617
Carbon Monoxide	lb/hr	1	5,776	66,422	72,198	72,507	72,507	72,507	72,507	72,507	72,270	72,198	72,198	72	177,881	72,198	236	
Nitrogen	lb/hr	0	193	2,219	2,412	2,420	2,420	2,420	2,420	2,420	2,414	2,412	2,412	2	2,420	2,412	6	
Oxygen	lb/hr																	
Argon	lb/hr	0	1,319	15,163	16,482	16,626	16,626	16,626	16,626	16,626	16,498	16,482	16,482	16	16,626	16,482	127	
Carbon Dioxide	lb/hr	1	7,534	86,636	94,170	97,892	97,892	97,892	97,892	97,892	94,264	94,170	94,170	94	36,597	94,170	3,628	
Hydrogen Sulfide (H	lb/hr	0	2	19	20	26	26	26	26	26	20	20	20	0	26	20	5	
SO2	lb/hr																	
Ammonia (NH3)	lb/hr	0	1	12	13	22	22	22	22	22	13	13	13	0	22	13	9	
NO2	lb/hr																	
Methane	lb/hr	0	1,725	19,834	21,559	21,751	21,751	21,751	21,751	21,751	21,580	21,559	21,559	22	18,269	21,559	170	
isobutane	lb/hr																	
n-butane	lb/hr	0	5	60	65	192	192	192	192	192	65	65	65	0	186	65	127	
ethane (C2H6)	lb/hr	0	22	256	279	288	288	288	288	288	279	279	279	0	15	279	9	
ethylene (C2H4)	lb/hr																	
acetylene (C2H2)	lb/hr																	
C3H8	lb/hr	0	41	472	513	796	796	796	796	796	514	513	513	1	753	513	282	
Pentane +	lb/hr	0	1	8	8	67	67	67	67	67	8	8	8	0	67	8	59	
Benzene (C6H6)	lb/hr	0	0	1	1	47	47	47	47	47	1	1	1	0	47	1	46	
Tar (C10H8)	lb/hr	0	0	0	0	2	2	2	2	2	0	0	0	0	2	0	2	
Carbon (Solid)	lb/hr																	
Sulfur (Solid)	lb/hr																	
Olivine (Solid)	lb/hr																	
MgO (Solid)	lb/hr																	
Methanol	lb/hr	0	11	131	142	2,980	2,980	2,980	2,980	2,980	142	142	142	0	2,505	142	2,838	
Ethanol	lb/hr	0	82	942	1,024	41,388	41,388	41,388	41,388	41,388	1,025	1,024	1,024	1	389	1,024	40,363	
Propanol	lb/hr	0	5	55	60	5,843	5,843	5,843	5,843	5,843	60	60	60	0	0	60	5,782	
n-Butanol	lb/hr	0	0	3	3	721	721	721	721	721	3	3	3	0	0	3	718	
Pentanol+	lb/hr	0	0	0	0	95	95	95	95	95	0	0	0	0	0	0	95	
Ash	lb/hr																	
Char	lb/hr																	
Wood	lb/hr																	
Enthalpy Flow	MMBTU/	0	-34	-387	-421	-613	-641	-648	-679	-684	-530	-532	-515	-1	-441	-397	-154	-2,889
Average Density	lb/ft^3																	

Heat Stream No.	MM BTU/hr
QAH413	30.84
QCH414	4.43
QH-AP-9	118.52
QH-AP-11	29.36
QH-AP-12	1.77
QH-BP-5	6.03
QH-BP-14	10.64
QH-BP-17	7.79
QR410	171.78

Work Stream No.	HP
WK412	-9540.1

Eq. No.	Equipment Name	Req.	Spar	Equipment Type
H-AP-9	Hot RefExhQuench /Cold AlcSynUnRx ToR	1		SHELL-TUBE
H-AP-11	Hot Alc Rx Exh. /Cold WaterPreHt Exchan	1		SHELL-TUBE
H-AP-12	Hot WaterBlw dn /Cold WaterPreHt Exchar	1		SHELL-TUBE
H-BP-5	Hot Reformate /Cold Alc SynUnRx Exchan	1		SHELL-TUBE
H-BP-14	Hot Reformate /Cold Alc SynUnRx Exchan	1		SHELL-TUBE
H-BP-17	Hot Alc Rx Exh. /Cold Water Exchanger	1		SHELL-TUBE
H-413	Mixed Alcohol first Condenser (air cooled)	1		AIR-COOLED EXCHA
H-414-1	Mixed Alcohol Condenser	1		SHELL-TUBE
K-412	Purge Gas Expander	1		CENTRIFUGAL
R-410	Mixed Alcohol Reactor	1		VERTICAL-VESSEL
S-501	Mixed Alcohols Condensation Knock-out	1		KNOCK-OUT DRUM

VER	DESCRIPTION	DATE
A	Thermochemical Design Report	8-24-04
B		8-25-04
C		9-17-04
D		11-17-04
E	TC Ethanol Design Report	12-17-06
F	HP Gasifier Design Report	3-02-09
		AD 3-02-09

NREL
NATIONAL RENEWABLE ENERGY LABORATORY
National Bioenergy Center

SECTION A400
MIXED ALCOHOL SYNTHESIS

ad20081116e

PFD-P810-A402 F

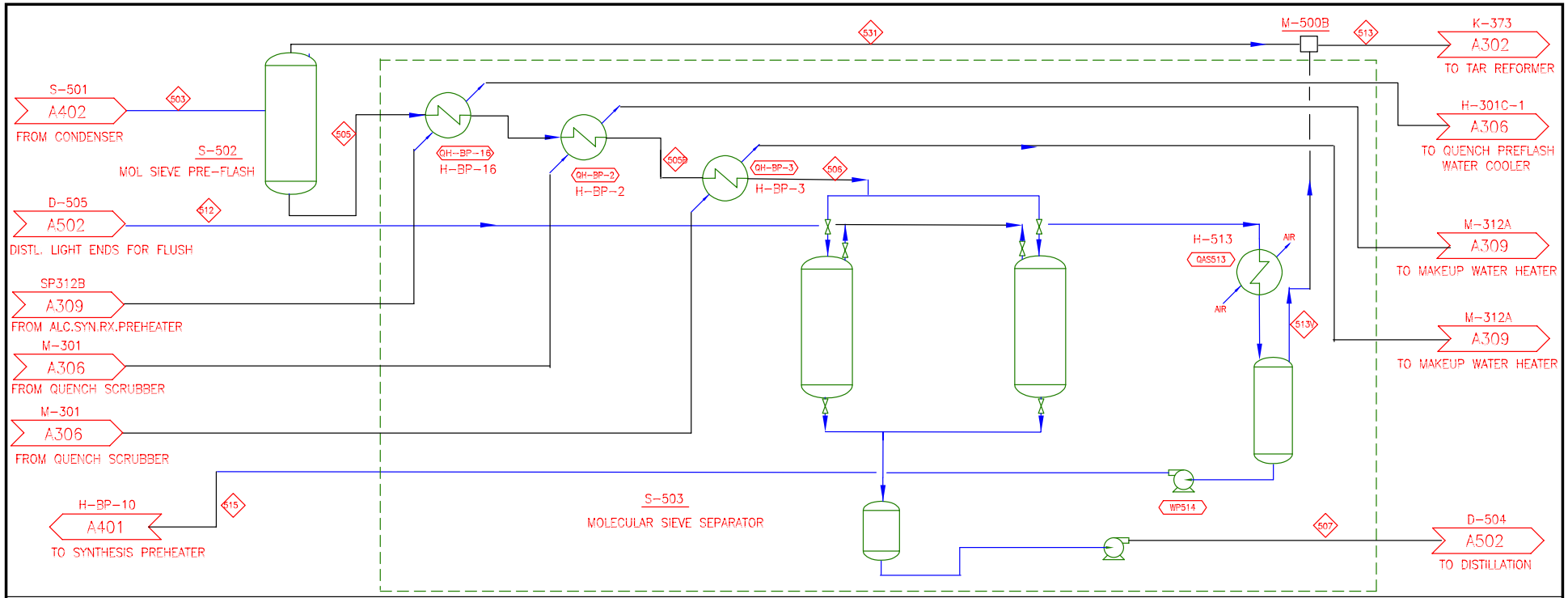

COMPONENT	UNITS	503	505	505B	506	507	512	513	513V	515	531
Total Flow	lb/hr	56,202	52,573	52,573	52,573	51,147	4,212	4,693	1,065	4,573	3,628
Temperature	F	110	99	249	269	246	194	113	140	153	99
Pressure	Psia	972.0	60.0	55.0	55.0	55.0	45.0	40.0	40.0	1,000.0	60.0
Vapor Fraction		0.00	0.00	1.00	1.00	1.00	1.00	1.00	1.00	0.00	1.00
Hydrogen	lb/hr	13	0	0	0	0	0	13	0	0	13
Water	lb/hr	1,684	1,682	1,682	1,682	256	0	18	16	1,411	2
Carbon Monoxide	lb/hr	236	5	5	5	5	5	236	5	0	232
Nitrogen	lb/hr	6	0	0	0	0	0	6	0	0	6
Oxygen	lb/hr										
Argon	lb/hr	127	6	6	6	6	6	127	6	0	121
Carbon Dioxide	lb/hr	3,628	759	759	759	759	759	3,609	740	19	2,869
Hydrogen Sulfide (H	lb/hr	5	3	3	3	3	3	4	2	1	2
SO2	lb/hr										
Ammonia (NH3)	lb/hr	9	7	7	7	7	7	3	2	6	1
NO2	lb/hr										
Methane	lb/hr	170	8	8	8	8	8	170	8	0	162
isobutane	lb/hr										
n-butane	lb/hr	127	118	118	118	118	118	39	31	87	8
ethane (C2H6)	lb/hr	9	2	2	2	2	2	9	2	0	8
ethylene (C2H4)	lb/hr										
acetylene (C2H2)	lb/hr										
C3H8	lb/hr	282	225	225	225	225	225	179	121	104	57
Pentane +	lb/hr	59	58	58	58	58	58	7	6	52	1
Benzene (C6H6)	lb/hr	46	46	46	46	46	0	0	0	0	0
Tar (C10H8)	lb/hr	2	2	2	2	2		0			0
Carbon (Solid)	lb/hr										
Sulfur (Solid)	lb/hr										
Olivine (Solid)	lb/hr										
MgO (Solid)	lb/hr										
Methanol	lb/hr	2,838	2,821	2,821	2,821	2,821	2,622	133	116	2,505	17
Ethanol	lb/hr	40,363	40,243	40,243	40,243	40,243	398	130	10	388	120
Propanol	lb/hr	5,782	5,776	5,776	5,776	5,776	0	7		0	7
n-Butanol	lb/hr	718	718	718	718	718		0			0
Pentanol+	lb/hr	95	95	95	95	95		0			0
Ash	lb/hr										
Char	lb/hr										
Wood	lb/hr										
Enthalpy Flow	MMBTU/	-154	-142	-117	-117	-109	-11	-16	-3	-19	-12
Average Density	lb/ft^3										

Heat Stream No.	MM BTU/hr	Work Stream No.	HP
QAS513	2.99	WP514	22.0
QH-BP-2	3.15		
QH-BP-3	0.44		
QH-BP-16	21.28		

Eq. No.	Equipment Name	Req.	Spar	Equipment Type
H-513	Mol Sieve Flush Condenser (air cooled)	1		AIR-COOLED EXCHA
H-BP-2	Cold MolSiev PreHt /Hot Reformate Exchan	1		SHELL-TUBE
H-BP-3	Cold MolSiev PreHt /Hot Reformate Exchan	1		SHELL-TUBE
H-BP-16	Cold MolSiev PreHt /Hot Reformate Exchan	1		SHELL-TUBE
M-500B	Mol-Sieve Off Gas Mixer	1		MISCELLANEOUS
S-502	Methanol Separation Column	1		DISTILLATION
S-503	Molecular Sieve (9 pieces)	1		PACKAGE

VER	DESCRIPTION	DATE
A	Thermochemical Design Report	3-20-04
B		8-25-04
C		9-17-04
D		11-17-04
E	TC Ethanol Design Report	12-17-06
F	HP Gasifier Design Report	3-02-09
		AD 3-02-09

NREL
NATIONAL RENEWABLE ENERGY LABORATORY
National Bioenergy Center

SECTION A500
ALCOHOL PURIFICATION

ad20081116e

PFD-P810-A501 F

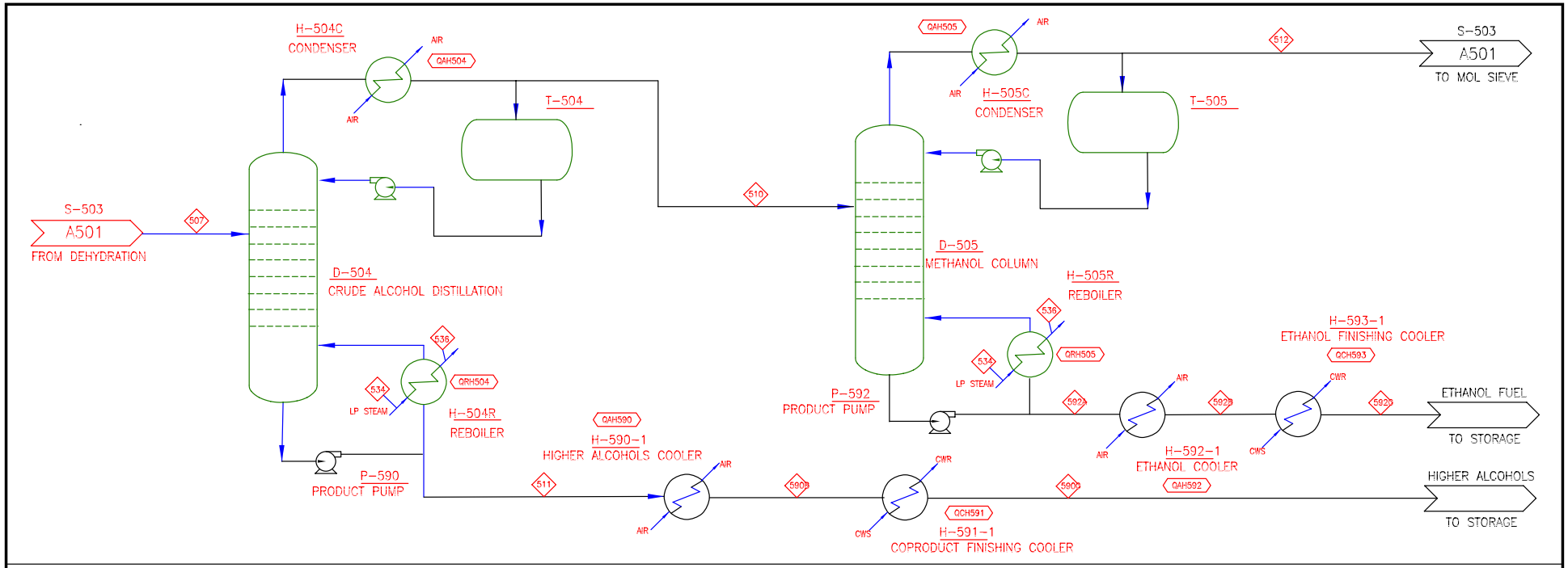

COMPONENT	UNITS	507	510	511	512	534	536	590B	590C	592A	592B	592C
Total Flow	lb/hr	51,147	43,943	7,204	4,212	41,310	41,310	7,204	7,204	39,731	39,731	39,731
Temperature	F	246	226	267	194	395	292	155	110	230	155	110
Pressure	Psia	55.0	45.0	45.0	45.0	64.7	59.7	40.0	35.0	45.0	40.0	35.0
Vapor Fraction		1.00	1.00	0.00	1.00	1.00						
Hydrogen	lb/hr	0	0		0							
Water	lb/hr	256	0	256	0	41,310	41,310	256	256	0	0	0
Carbon Monoxide	lb/hr	5	5		5							
Nitrogen	lb/hr	0	0		0							
Oxygen	lb/hr											
Argon	lb/hr	6	6		6							
Carbon Dioxide	lb/hr	759	759	0	759			0	0			
Hydrogen Sulfide (H2S)	lb/hr	3	3	0	3			0	0			
SO2	lb/hr											
Ammonia (NH3)	lb/hr	7	7	0	7			0	0			
NO2	lb/hr											
Methane	lb/hr	8	8	0	8			0	0			
Isobutane	lb/hr											
n-butane	lb/hr	118	118	0	118			0	0	0	0	0
ethane (C2H6)	lb/hr	2	2	0	2			0	0			
ethylene (C2H4)	lb/hr											
acetylene (C2H2)	lb/hr											
C3H8	lb/hr	225	225	0	225			0	0			
Pentane +	lb/hr	58	58	0	58			0	0	0	0	0
Benzene (C6H6)	lb/hr	46	32	14	0			14	14	32	32	32
Tar (C10H8)	lb/hr	2		2				2	2			
Carbon (Solid)	lb/hr											
Sulfur (Solid)	lb/hr											
Olivine (Solid)	lb/hr											
MgO (Solid)	lb/hr											
Methanol	lb/hr	2,821	2,821	0	2,622			0	0	199	199	199
Ethanol	lb/hr	40,243	39,840	402	398			402	402	39,442	39,442	39,442
Propanol	lb/hr	5,776	58	5,718	0			5,718	5,718	58	58	58
n-Butanol	lb/hr	718	0	718				718	718			
Pentanol+	lb/hr	95	0	95				95	95			
Ash	lb/hr											
Char	lb/hr											
Wood	lb/hr											
Enthalpy Flow	MMBTU/	-109	-96	-16	-11	-233	-273	-16	-17	-98	-101	-102
Average Density	lb/ft^3											

Heat Stream No.	MM BTU/hr	Work Stream No.	HP
QAH504	18.83		
QAH505	36.82		
QCH591	0.24		
QCH593	1.44		
QAH590	0.66		
QAH592	2.62		
QRH504	-16.43		
QRH505	-23.57		

Eq. No.	Equipment Name	Req.	Spar	Equipment Type
D-504	Ethanol/Propanol Splitter	1		DISTILLATION
D-505	Methanol/Ethanol Splitter	1		DISTILLATION
H-504C	D-504 condenser (air cooled)	1		AIR-COOLED EXCHA
H-504R	Ethanol/Propanol Splitter Reboiler	1		SHELL-TUBE
H-505C	D-505 condenser (air cooled)	1		AIR-COOLED EXCHA
H-505R	Methanol/Ethanol Splitter Reboiler	1		SHELL-TUBE
H-590-1	Mixed Alcohol Product Cooler (air cooled)	1		AIR-COOLED EXCHA
H-591-1	Higher Alcohol Product Finishing cooler	1		SHELL-TUBE
H-592-1	Ethanol Product Cooler (air cooled)	1		AIR-COOLED EXCHA
H-593-1	ETHANOL Product Finishing cooler	1		SHELL-TUBE
P-590	Mixed Alcohol Product Pump	1		CENTRIFUGAL
P-592	Ethanol Product Pump	1		CENTRIFUGAL
T-504	Ethanol/Propanol Splitter Reflux Drum	1		KNOCK-OUT DRUM
T-505	Methanol/Ethanol Splitter Reflux Drum	1		KNOCK-OUT DRUM

VER	DESCRIPTION	DATE
A	Thermochemical Design Report	3-20-04
B		8-25-04
C		9-17-04
D		11-17-04
E	TC Ethanol Design Report	12-17-06
F	HP Gasifier Design Report	02-28-09
		AD 2-28-09

NREL
National Bioenergy Center
NATIONAL RENEWABLE ENERGY LABORATORY

SECTION A500
ALCOHOL PURIFICATION

ad20081116e

PFD-P810-A502 F

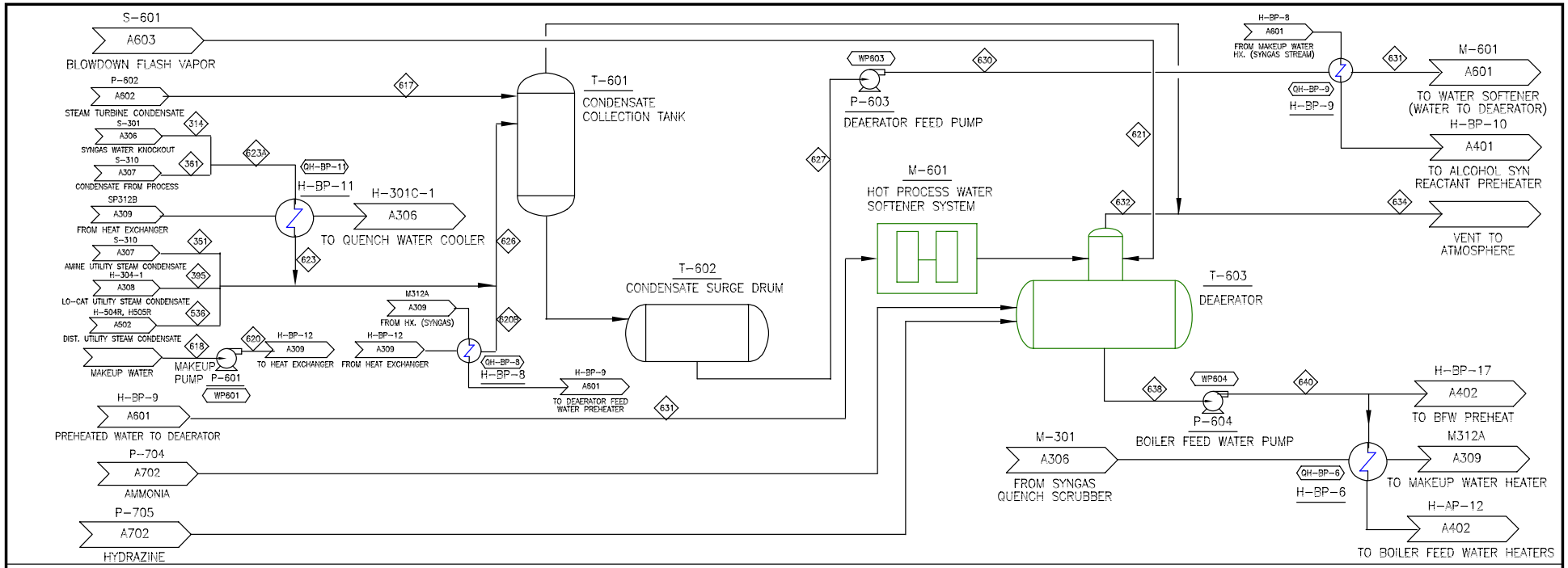

COMPONENT	UNITS	314	351	361	395	536	617	618	620	620B	621	623	623A	626	627	630	631	632	634	638	640
Total Flow	lb/hr	90,840	272,907	176	259	41,310	147	32,032	32,032	32,032	57	90,959	90,959	437,467	437,614	437,614	437,614	0	57	437,617	437,617
Temperature	F	130	230	110	230	292	116	60	60	237	130	210	130	233	232	233	235	235	60	235	237
Pressure	Psia	424.0	59.7	414.0	59.7	59.7	24.6	14.7	24.7	23.7	414.0	414.0	414.0	22.7	22.7	24.7	22.7	22.7	22.7	22.7	880.0
Vapor Fraction											1.00							1.00	1.00		
Hydrogen	lb/hr	0		0							0								0		
Water	lb/hr	90,783	272,907	176	259	41,310	147	32,032	32,032	32,032		90,959	90,959	437,467	437,614	437,614	437,614	0	0	437,617	437,617
Carbon Monoxide	lb/hr	0		0							0								0		
Nitrogen	lb/hr	0		0							0								0		
Oxygen	lb/hr																				
Argon	lb/hr	0		0							0								0		
Carbon Dioxide	lb/hr	21		0							21								21		
Hydrogen Sulfide (H	lb/hr	0		0							0								0		
SO2	lb/hr																				
Ammonia (NH3)	lb/hr	34		0							34								34		
NO2	lb/hr																				
Methane	lb/hr	0		0							0								0		
isobutane	lb/hr																				
n-butane	lb/hr	0		0							0								0		
ethane (C2H6)	lb/hr	0		0							0								0		
ethylene (C2H4)	lb/hr																				
acetylene (C2H2)	lb/hr																				
C3H8	lb/hr	0		0							0								0		
Pentane +	lb/hr	0									0								0		
Benzene (C6H6)	lb/hr	0		0							0								0		
Tar (C10H8)	lb/hr	0		0							0								0		
Carbon (Solid)	lb/hr																				
Sulfur (Solid)	lb/hr																				
Olivine (Solid)	lb/hr																				
MgO (Solid)	lb/hr																				
Methanol	lb/hr			0							0								0		
Ethanol	lb/hr			0							0								0		
Propanol	lb/hr			0							0								0		
n-Butanol	lb/hr										0								0		
Pentanol+	lb/hr																				
Ash	lb/hr																				
Char	lb/hr																				
Wood	lb/hr																				
Enthalpy Flow	MMBTU/	-618	-1,821	-1	-2	-273	-1	-219	-219	-213	0	-609	-616	-2,918	-2,919	-2,919	-2,918	0	0	-2,918	-2,916
Average Density	lb/ft^3																				

Heat Stream No.	MM BTU/hr
QH-BP-6	19.47
QH-BP-8	0.23
QH-BP-9	1.00
QH-BP-11	7.28

Work Stream No.	HP
WP601	0.8
WP603	11.9
WP604	637.9

Eq. No.	Equipment Name	Req.	Spar	Equipment Type
H-BP-6	Hot Reformate /Cold Water Exchanger	1		SHELL-TUBE
H-BP-8	Cold Water /Hot Reformate Exchanger	1		SHELL-TUBE
H-BP-9	Cold Water /Hot Reformate Exchanger	1		SHELL-TUBE
H-BP-11	Hot Reformate /Cold WaterRecy Exchang	1		SHELL-TUBE
M-601	Hot Process Water Softener System	1		PACKAGE
P-601	Collection Pump	1	1	CENTRIFUGAL
P-603	Deaerator Feed Pump	1	1	CENTRIFUGAL
P-604	Boiler Feed Water Pump	1	1	CENTRIFUGAL
T-601	Condensate Collection Tank	1		HORIZONTAL-VESSE
T-602	Condensate Surge Drum	1		HORIZONTAL-VESSE
T-603	Deaerator	1		HORIZONTAL-VESSE

VER	DESCRIPTION	DATE
A	Thermochemical Design Report	8-24-04
B		8-26-04
C		9-17-04
D		11-17-04
E	TC Ethanol Design Report	12-17-06
F	HP Gasifier Design Report	3-02-09
		AD 3-02-09

NREL NATIONAL RENEWABLE ENERGY LABORATORY
National Bioenergy Center

SECTION 600
STEAM SYSTEM & PWR GENERATION

ad20081116e

PFD-P810-A601 F

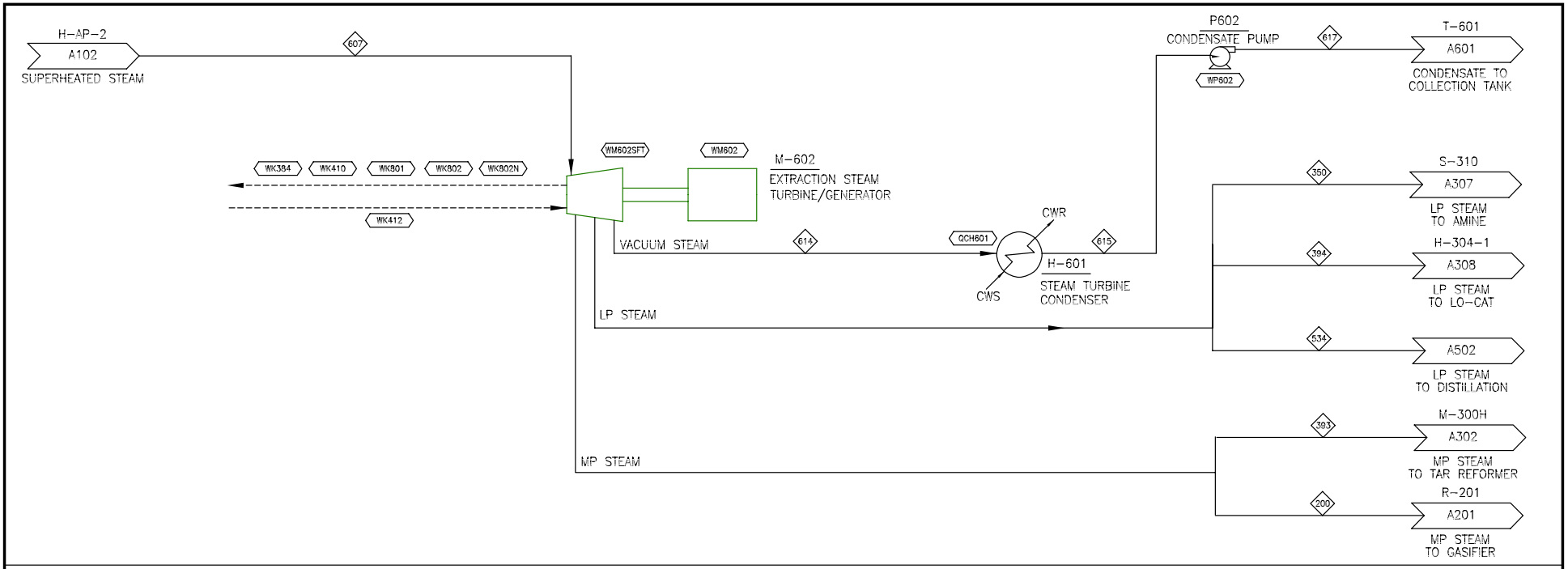

COMPONENT	UNITS	200	350	393	394	534	607	614	615	617
Total Flow	lb/hr	38,678	272,907	75,563	259	41,310	428,864	147	147	147
Temperature	F	769	399	770	399	399	900	116	116	116
Pressure	Psia	490.0	64.7	490.0	64.7	64.7	850.0	1.5	1.5	24.6
Vapor Fraction		1.00	1.00	1.00	1.00	1.00	1.00	0.92		
Hydrogen	lb/hr									
Water	lb/hr	38,678	272,907	75,563	259	41,310	428,864	147	147	147
Carbon Monoxide	lb/hr									
Nitrogen	lb/hr									
Oxygen	lb/hr									
Argon	lb/hr									
Carbon Dioxide	lb/hr									
Hydrogen Sulfide (H	lb/hr									
SO2	lb/hr									
Ammonia (NH3)	lb/hr									
NO2	lb/hr									
Methane	lb/hr									
isobutane	lb/hr									
n-butane	lb/hr									
ethane (C2H6)	lb/hr									
ethylene (C2H4)	lb/hr									
acetylene (C2H2)	lb/hr									
C3H8	lb/hr									
Pentane +	lb/hr									
Benzene (C6H6)	lb/hr									
Tar (C10H8)	lb/hr									
Carbon (Solid)	lb/hr									
Sulfur (Solid)	lb/hr									
Olivine (Solid)	lb/hr									
MgO (Solid)	lb/hr									
Methanol	lb/hr									
Ethanol	lb/hr									
Propanol	lb/hr									
n-Butanol	lb/hr									
Pentanol+	lb/hr									
Ash	lb/hr									
Char	lb/hr									
Wood	lb/hr									
Enthalpy Flow	MMBTU/	-212	-1,539	-414	-1	-233	-2,323	-1	-1	-1
Average Density	lb/ft^3									

Heat Stream No.	MM BTU/hr
QCH601	0.14

Work Stream No.	HP
WK384	2209.9
WK410	9167.3
WK412	-9540.1
WM602	-30009.7
WM602SFT	-15508.7
WP602	0.0
WK801	9249.6
WK802	1507.6
WK802N	1906.8

Eq. No.	Equipment Name	Req.	Spar	Equipment Type
H-601	Steam Turbine Condenser	1		SHELL-TUBE
M-602	Extraction Steam Turbine/Generator	1		STEAM-TURBINE
P-602	Condensate Pump	1	1	CENTRIFUGAL

VER	DESCRIPTION	DATE
A	Thermochemical Design Report	5-24-04
B		8-26-04
C		9-17-04
D		11-17-04
E	TC Ethanol Design Report	12-17-06
F	HP Gasifier Design Report	3-02-09
		AD 3-02-09

NREL
NATIONAL RENEWABLE ENERGY LABORATORY
National Bioenergy Center

SECTION A600
STEAM SYSTEM & PWR GENERATION

ad20081116e

PFD-P810-A602 F

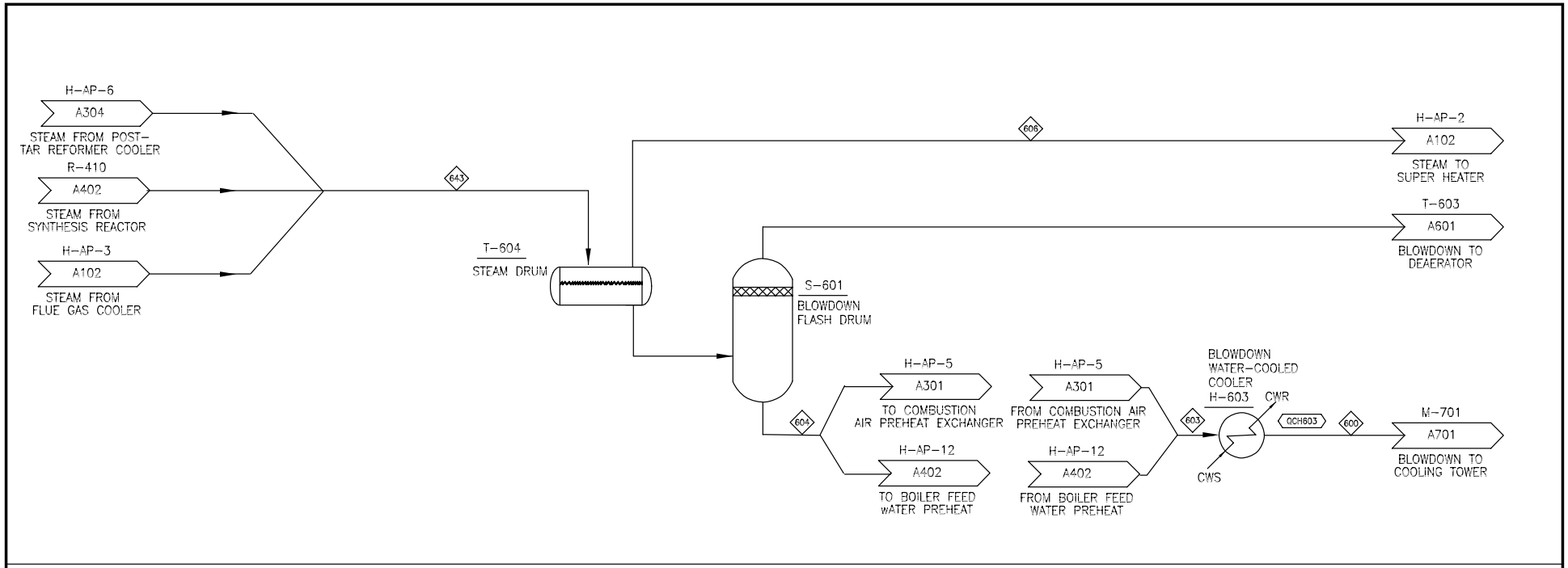

COMPONENT	UNITS	600	603	604	606	643
Total Flow	lb/hr	8,752	8,752	8,752	428,864	437,617
Temperature	F	112	315	527	526	528
Pressure	Psia	14.7	860.0	865.0	855.0	870.0
Vapor Fraction					1.00	0.98
Hydrogen	lb/hr					
Water	lb/hr	8,752	8,752	8,752	428,864	437,617
Carbon Monoxide	lb/hr					
Nitrogen	lb/hr					
Oxygen	lb/hr					
Argon	lb/hr					
Carbon Dioxide	lb/hr					
Hydrogen Sulfide (H	lb/hr					
SO2	lb/hr					
Ammonia (NH3)	lb/hr					
NO2	lb/hr					
Methane	lb/hr					
isobutane	lb/hr					
n-butane	lb/hr					
ethane (C2H6)	lb/hr					
ethylene (C2H4)	lb/hr					
acetylene (C2H2)	lb/hr					
C3H8	lb/hr					
Pentane +	lb/hr					
Benzene (C6H6)	lb/hr					
Tar (C10H8)	lb/hr					
Carbon (Solid)	lb/hr					
Sulfur (Solid)	lb/hr					
Olivine (Solid)	lb/hr					
MgO (Solid)	lb/hr					
Methanol	lb/hr					
Ethanol	lb/hr					
Propanol	lb/hr					
n-Butanol	lb/hr					
Pentanol+	lb/hr					
Ash	lb/hr					
Char	lb/hr					
Wood	lb/hr					
Enthalpy Flow	MMBTU/	-60	-58	-56	-2,433	-2,489
Average Density	lb/ft^3					

Heat Stream No.	MM BTU/hr	Work Stream No.	HP
QCH603	1.80		

Eq. No.	Equipment Name	Req.	Spar	Equipment Type
H-603	Blow dow n Water-c ooled Cooler	1		SHELL-TUBE
S-601	Blow dow n Flash Drum	1		HORIZONTAL-VESSE
T-604	Steam Drum	1		HORIZONTAL-VESSE

VER	DESCRIPTION	DATE
A	Thermochemical Design Report	5-25-04
C		9-17-04
D		11-17-04
E	TC Ethanol Design Report	12-17-06
F	HP Gasifier Design Report	3-02-09
		AD 3-02-09

NREL NATIONAL RENEWABLE ENERGY LABORATORY
National Bioenergy Center

SECTION A600
STEAM SYSTEM & PWR GENERATION

ad20081116e | PFD-P810-A603 | F

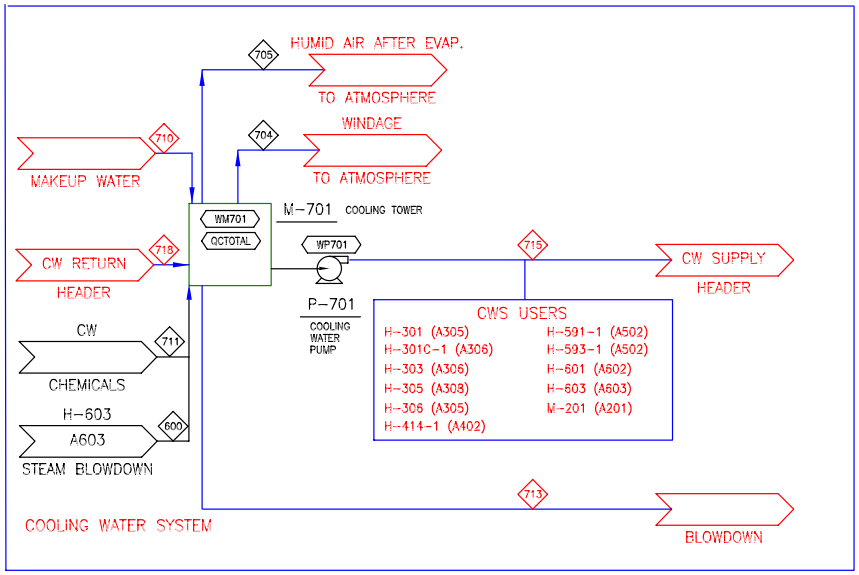

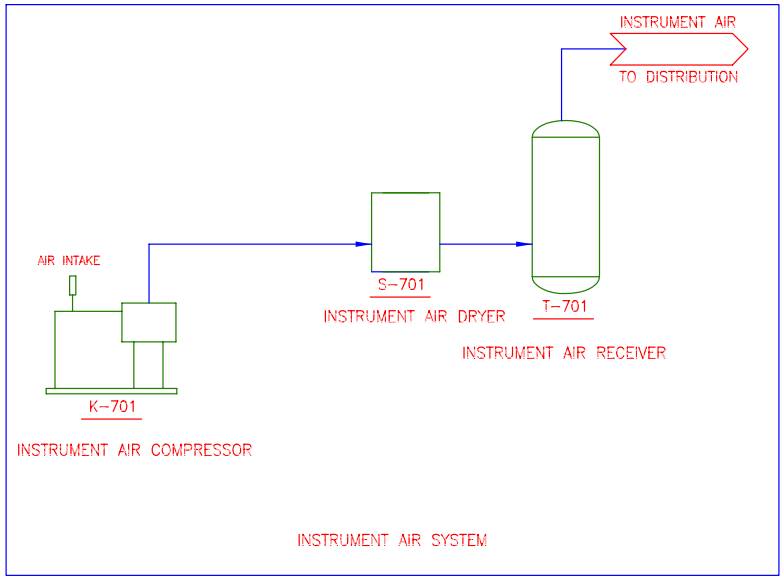

COMPONENT	UNITS	600	704	705	710	711	713	715	718
Total Flow	lb/hr	8,752	3,234	1,676,463	28,503	0	6,804	1,617,066	1,617,066
Temperature	F	112	96	103	60	60	90	90	110
Pressure	Psia	14.7	14.7	14.7	14.7	14.7	14.7	74.7	59.7
Vapor Fraction				1.00					
Hydrogen	lb/hr								
Water	lb/hr	8,752	3,234	59,397	28,503	0	6,804	1,617,066	1,617,066
Carbon Monoxide	lb/hr								
Nitrogen	lb/hr			1,221,238					
Oxygen	lb/hr			374,187					
Argon	lb/hr			20,830					
Carbon Dioxide	lb/hr			811					
Hydrogen Sulfide (H	lb/hr								
SO2	lb/hr								
Ammonia (NH3)	lb/hr								
NO2	lb/hr								
Methane	lb/hr								
isobutane	lb/hr								
n-butane	lb/hr								
ethane (C2H6)	lb/hr								
ethylene (C2H4)	lb/hr								
acetylene (C2H2)	lb/hr								
C3H8	lb/hr								
Pentane +	lb/hr								
Benzene (C6H6)	lb/hr								
Tar (C10H8)	lb/hr								
Carbon (Solid)	lb/hr								
Sulfur (Solid)	lb/hr								
Olivine (Solid)	lb/hr								
MgO (Solid)	lb/hr								
Methanol	lb/hr								
Ethanol	lb/hr								
Propanol	lb/hr								
n-Butanol	lb/hr								
Pentanol+	lb/hr								
Ash	lb/hr								
Char	lb/hr								
Wood	lb/hr								
Enthalpy Flow	MMBTU/	-60	-22	-336	-196	0	-47	-11,080	-11,045
Average Density	lb/ft^3								

Heat Stream No.	MM BTU/hr	Work Stream No.	HP
QCTOTAL	34.80	A700.WM701	91.1
		A700.WP701	157.8

Eq. No.	Equipment Name	Req.	Spar	Equipment Type
K-701	Plant Air Compressor	2	1	RECIPROCATING
M-701	Cooling Tow er System	1		INDUCED-DRAFT
P-701	Cooling Water Pump	1	1	CENTRIFUGAL
S-701	Instrument Air Dryer	1	1	PACKAGE
T-701	Plant Air Receiver	1		HORIZONTAL-VESSE

VER	DESCRIPTION	DATE
C	Thermochemical Design Report	9-20-04
D		11-22-04
E	TC Ethanol Design Report	12-17-06
F	HP Gasifier Design Report	3-02-09
		AD 3-02-09

NREL National Bioenergy Center
NATIONAL RENEWABLE ENERGY LABORATORY

SECTION A700
COOLING WATER & OTHER UTILITIES

ad20081116e | PFD-P810-A701 | F

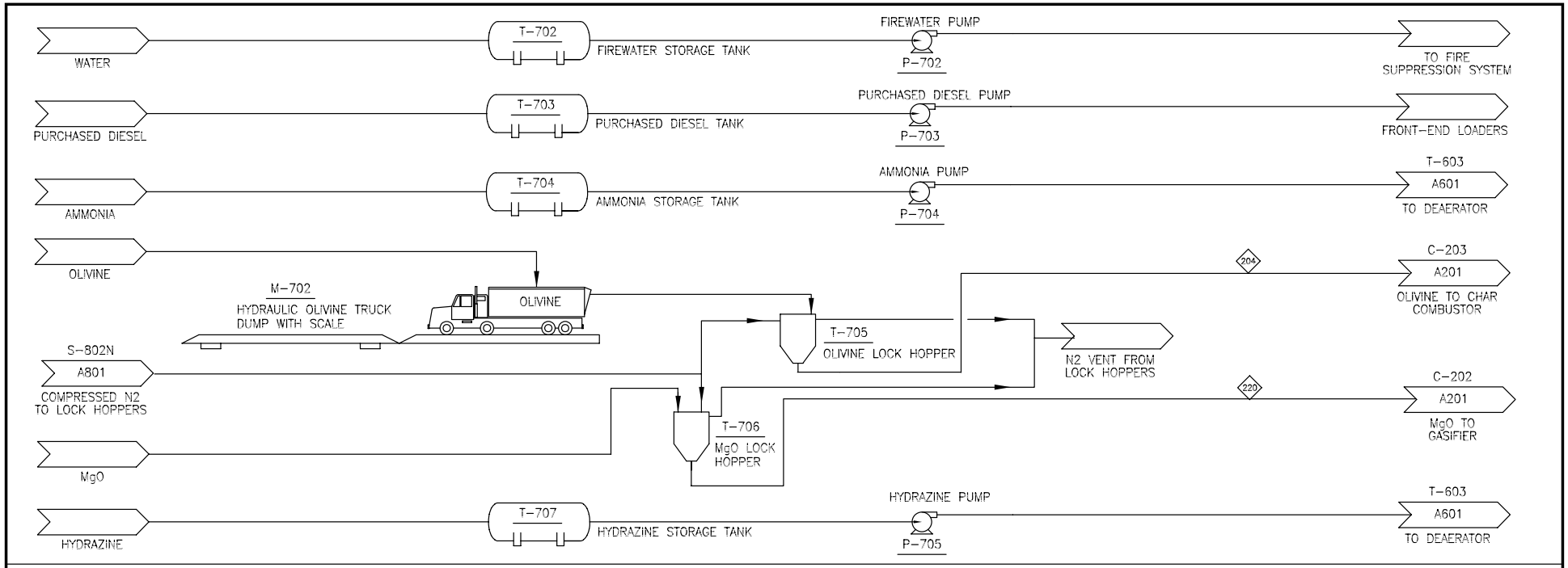

COMPONENT	UNITS	204	220
Total Flow	lb/hr	1,821	7
Temperature	F		60
Pressure	Psia	1.0	25.0
Vapor Fraction			
Hydrogen	lb/hr		
Water	lb/hr		
Carbon Monoxide	lb/hr		
Nitrogen	lb/hr		
Oxygen	lb/hr		
Argon	lb/hr		
Carbon Dioxide	lb/hr		
Hydrogen Sulfide (H	lb/hr		
SO2	lb/hr		
Ammonia (NH3)	lb/hr		
NO2	lb/hr		
Methane	lb/hr		
isobutane	lb/hr		
n-butane	lb/hr		
ethane (C2H6)	lb/hr		
ethylene (C2H4)	lb/hr		
acetylene (C2H2)	lb/hr		
C3H8	lb/hr		
Pentane +	lb/hr		
Benzene (C6H6)	lb/hr		
Tar (C10H8)	lb/hr		
Carbon (Solid)	lb/hr		
Sulfur (Solid)	lb/hr		
Olivine (Solid)	lb/hr	1,821	7
MgO (Solid)	lb/hr		
Methanol	lb/hr		
Ethanol	lb/hr		
Propanol	lb/hr		
n-Butanol	lb/hr		
Pentanol+	lb/hr		
Ash	lb/hr		
Char	lb/hr		
Wood	lb/hr		
Enthalpy Flow	MMBTU/	0	0
Average Density	lb/ft^3		

Heat Stream No.	MM BTU/hr	Work Stream No.	HP

Eq. No.	Equipment Name	Req.	Spar	Equipment Type
M-702	Hydraulic Truck Dump with Scale	1		TRUCK-SCALE
P-702	Firewater Pump	1	1	CENTRIFUGAL
P-703	Diesel Pump	1	1	CENTRIFUGAL
P-704	Ammonia Pump	1	1	CENTRIFUGAL
P-705	Hydrazine Pump	1		CENTRIFUGAL
T-702	Firewater Storage Tank	1		FLAT-BTM-STORAGE
T-703	Diesel Storage Tank	1		FLAT-BTM-STORAGE
T-704	Ammonia Storage Tank	1		HORIZONTAL-STORA
T-705	Olivine Lock Hopper	1		VERTICAL-VESSEL
T-706	MgO Lock Hopper	1		VERTICAL-VESSEL
T-707	Hydrazine Storage Tank	1		VERTICAL-VESSEL

VER	DESCRIPTION	DATE
A	Thermochemical Design Report	3-23-04
B		8-26-04
C		9-17-04
D		11-17-04
E	TC Ethanol Design Report	12-17-06
F	HP Gasifier Design Report	3-02-09
		AD 3-02-09

NREL National Bioenergy Center
NATIONAL RENEWABLE ENERGY LABORATORY

SECTION A700
COOLING WATER & OTHER UTILITIES

ad20081116e PFD-P810-A702 F

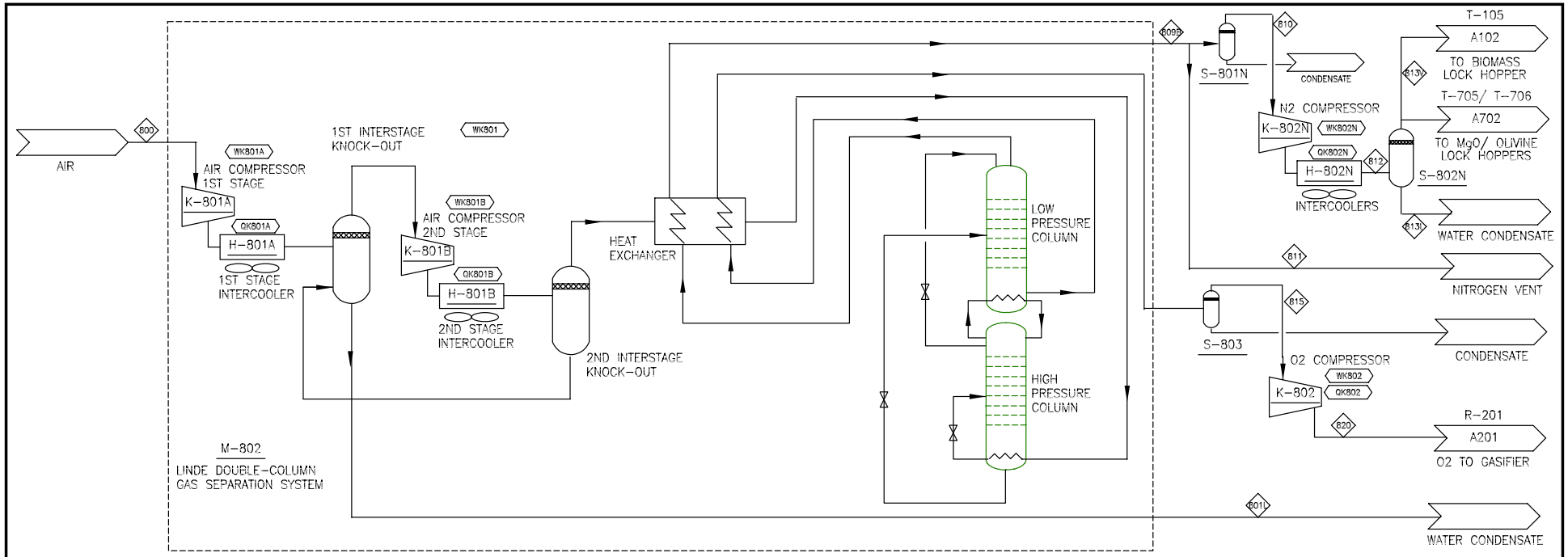

COMPONENT	UNITS	800	801L	809B	810	811	812	813L	813V	815	820
Total Flow	lb/hr	176,280	1,072	132,927	34,856	98,071	34,593	218	34,375	42,281	42,281
Temperature	F	90	107	100	100	100	140	140	140	10	370
Pressure	Psia	14.7	44.1	72.5	72.5	72.5	445.0	445.0	445.0	71.5	440.0
Vapor Fraction		1.00		0.98	0.98	0.98	0.99		1.00	1.00	1.00
Hydrogen	lb/hr										
Water	lb/hr	3,439	1,072	2,367	621	1,746	358	218	140		
Carbon Monoxide	lb/hr										
Nitrogen	lb/hr	130,532	0	130,458	34,209	96,250	34,209	0	34,209	74	74
Oxygen	lb/hr	39,995	0	15	4	11	4	0	4	39,980	39,980
Argon	lb/hr	2,226	0	0	0	0	0	0	0	2,226	2,226
Carbon Dioxide	lb/hr	87	0	87	23	64	23	0	23		
Hydrogen Sulfide (H	lb/hr										
SO2	lb/hr										
Ammonia (NH3)	lb/hr										
NO2	lb/hr										
Methane	lb/hr										
isobutane	lb/hr										
n-butane	lb/hr										
ethane (C2H6)	lb/hr										
ethylene (C2H4)	lb/hr										
acetylene (C2H2)	lb/hr										
C3H8	lb/hr										
Pentane +	lb/hr										
Benzene (C6H6)	lb/hr										
Tar (C10H8)	lb/hr										
Carbon (Solid)	lb/hr										
Sulfur (Solid)	lb/hr										
Olivine (Solid)	lb/hr										
MgO (Solid)	lb/hr										
Methanol	lb/hr										
Ethanol	lb/hr										
Propanol	lb/hr										
n-Butanol	lb/hr										
Pentanol+	lb/hr										
Ash	lb/hr										
Char	lb/hr										
Wood	lb/hr										
Enthalpy Flow	MMBTU/	-20	-7	-15	-4	-11	-2	-1	0	-1	3
Average Density	lb/ft^3										

Heat Stream No.	MM BTU/hr
QK801A	12.10
QK801B	13.70
QK802	0.52
QK802N	4.64

Work Stream No.	HP
WK801	9249.6
WK801A	4572.1
WK801B	4677.4
WK802	1507.6
WK802N	1906.8

Eq. No.	Equipment Name	Req.	Spar	Equipment Type
H-802N	N2-compressor water cooled aftercooler	1		SHELL-TUBE
K-802	post ASU O2 compressor	1		CENTRIFUGAL
K-802N	post ASU N2 compressor	1		CENTRIFUGAL
M-802	Air Separation Unit (ASU) including air co	1		MISCELLANEOUS
S-801N	Pre N2-compressor KO	1		KNOCK-OUT DRUM
S-802N	Post N2-compressor KO	1		KNOCK-OUT DRUM
S-803	Pre O2-compressor KO	1		KNOCK-OUT DRUM

VER	DESCRIPTION	DATE
A	Thermochemical Design Report	8-24-04
B		8-25-04
C		8-17-04
D		11-17-04
E	TC Ethanol Design Report	12-17-06
F	HP Gasifier Design Report	3-02-09
		AD 3-02-09

NREL
National Bioenergy Center
NATIONAL RENEWABLE ENERGY LABORATORY

SECTION A800
AIR SEPARATION UNIT

ad20081116e | PFD-P810-A801 | F

Appendix G

Syngas and Char Correlations

The gasifier was modeled using correlations based on data from the Gas Technology Institute (GTI - formerly Institute of Gas Technology) 12 ton/day test facility. The data and original correlations for the gasifier can be found in Evans et al (1988).[1] The temperature range for the data is 1,390ºF to 1,800ºF, the pressure range is 83.7 to 344.7 psia, the oxygen to feed carbon molar ratio is 0.148 to 0.343, and the water to feed carbon molar ratio is 0.24 to 1.97; the majority of the data are in the range of 1,500ºF to 1,672ºF. The experimental data was collected from 22 runs using maple wood chips, whole tree chips from Pennsylvania (90% red oak; balance chestnut, aspen, and black birch) or whole tree chips from Wisconsin (34% maple, 33.5% oak, 19.6% birch, 12.9% pine and brush) as feedstocks. The correlations used in this report are from Eggeman (2005).[2]

The GTI test facility's gas production data was correlated to gasifier temperature, pressure, O_2:Feed C molar ratio, and H_2O:Feed C molar ratio. 1% of the higher heating value of wood is assumed to be lost from the gasifier. The steam supplied to the gasifier is 20% by weight of the dried wood going into the gasifier, where the dried wood contains 5% water by weight. The oxygen supplied to the gasifier is adjusted to maintain the specified gasifier temperature of 1600°F. Details of the correlation equations and parameters are shown in the following table.

Table G-1. GTI Gasifier Correlation[a]

Eq.	Form	A	B	C	D	E	R^2
1	$H_2/Feed\ H = A + B*P + C*T + D*(\frac{O_2}{Feed\ C}) + E*(\frac{H_2O}{Feed\ C})$	-3.830761E-01	1.894350E-04	2.666675E-04	1.060088E-01	7.880955E-02	0.7828
2	$CO/Feed\ C = A + B*P + C*T + D*(\frac{O_2}{Feed\ C}) + E*(\frac{H_2O}{Feed\ C})$	-8.130017E-02	-3.340050E-04	2.614482E-04	1.495730E-01	-5.268367E-02	0.7984
3	$CO_2/Feed\ C = A + B*P + C*T + D*(\frac{O_2}{Feed\ C}) + E*(\frac{H_2O}{Feed\ C})$	7.157172E-02	3.843454E-04	1.286060E-05	6.124545E-01	9.980868E-02	0.9080
4	$CH_4/Feed\ C = A + B*P + C*T + D*(\frac{O_2}{Feed\ C}) + E*(\frac{H_2O}{Feed\ C})$	1.093589E-02	1.388446E-04	8.812765E-05	-2.274854E-01	3.427825E-02	0.6243
5	$C_2H_4/Feed\ C = A + B*P + C*T + D*(\frac{O_2}{Feed\ C}) + E*(\frac{H_2O}{Feed\ C})$	5.301812E-02	-6.740399E-05	-1.372749E-05	-9.076286E-03	-4.854082E-03	0.8910
6	$C_2H_6/Feed\ C = A + B*P + C*T + D*(\frac{O_2}{Feed\ C}) + E*(\frac{H_2O}{Feed\ C})$	1.029750E-01	-5.440777E-06	-5.350103E-05	-3.377091E-02	-1.915339E-03	0.7451
7	$C_6H_6/Feed\ C = A + B*P + C*T + D*(\frac{O_2}{Feed\ C}) + E*(\frac{H_2O}{Feed\ C})$	4.676833E-02	-1.937444E-05	-1.270868E-05	-1.046762E-02	-8.459647E-03	0.3242
8	$C_{10}H_8/Feed\ C = A + B*P + C*T + D*(\frac{O_2}{Feed\ C}) + E*(\frac{H_2O}{Feed\ C})$	1.827359E-02	-2.328921E-06	-5.951746E-06	-1.936385E-02	-7.678310E-04	0.4726
9	$\%\ Feed\ N\ in\ Char = A$	3.360000E+00					
10	$\%\ Feed\ S\ in\ Char = A$	8.450000E+00					
11	$\%\ Feed\ O\ in\ Char = A + B*P + C*T + D*(\frac{O_2}{Feed\ C}) + E*(\frac{H_2O}{Feed\ C})$	1.512040E+00	1.582010E-04	-6.972612E-04	1.573581E-01	-1.420915E-01	0.3332

[a]All ratios are on a molar basis, pressure in psia, temperature in ^oF

The following general procedure is used for the gasifier production:

- Gasifier temperature *T*, pressure *P*, supplied O_2, and the total H_2O in the wood and supplied steam is gathered.
- The mass and molar amounts of carbon, hydrogen, oxygen, sulfur, nitrogen, and ash (as a pseudo-element) are determined from the biomass's ultimate analysis.
- The amount of syngas and its composition is determined from the gasifier correlations.
- The amount of carbon in the syngas and tar is determined. Residual carbon is parsed in the char.
- The amount of oxygen in the syngas is determined. A minimum fraction of the biomass oxygen is required to be parsed to the char based on equation 11 above. If there is a deficit of oxygen, then the associated water is decomposed to make sure that this amount of oxygen is parsed to the char; if there is excess oxygen, then that is parsed to the char without decomposing hydrogen.
- A set amount of sulfur is parsed to the char (8.4%). All remaining sulfur is set as H_2S in the syngas.
- A set amount of nitrogen is parsed to the char (3.4%). All remaining nitrogen is set as NH_3 in the syngas.
- The amount of hydrogen in the syngas (including tar, H_2S, NH_3, and decomposed water) is determined. All remaining hydrogen is parsed to the char.
- All ash is parsed to the char.
- The heat of formation of the char is estimated from the resulting ultimate analysis from this elemental material balance and is used for the energy balance calculations.

The composition of syngas at 1600°F for the base case used in this report is shown below.

Table G-2. Gasifier Outlet Composition for Base Case

Component	Weight %	Component	Weight %
H_2	1.38%	NH_3	0.13%
CO	15.62%	CH_4	8.56%
AR	0.81%	C_2H_6	0.76%
CO_2	49.10%	C_6H_6	2.96%
H_2O	15.24%	Tar	1.58%
H_2S	0.06%	Char	3.77%

References

[1]Evans, R.J.; Knight, R.A.; Onischak, N.; Babu, S.P. *Development of Biomass Gasification to Produce Substitute Fuels*. PNL-6518. Work performed by the Institute of Gas Technology for Pacific Northwest Laboratory under contract DE-AC06-76RLO 1830 with the U.S. Department of Energy. Richland, WA: Pacific Northwest Laboratory, March 1988.

[2]Eggeman, T. *Updated Correlations for GTI Gasifier – WDYLD8*. Work performed by Neoterics International, Lakewood, CO for National Renewable Energy Laboratory, June 27, 2005.

Appendix H

Pinch Analysis

Some of the details of the pinch analysis are shown in this section. They include the hot and cold composite curves and the specific heat exchanger network design chosen for the base case. Some of the assumptions used to get the heat exchanger costs using Aspen Icarus Process Evaluator are also shown.

The upper and lower pinch temperatures were 314.8°F and 298°F as shown below.

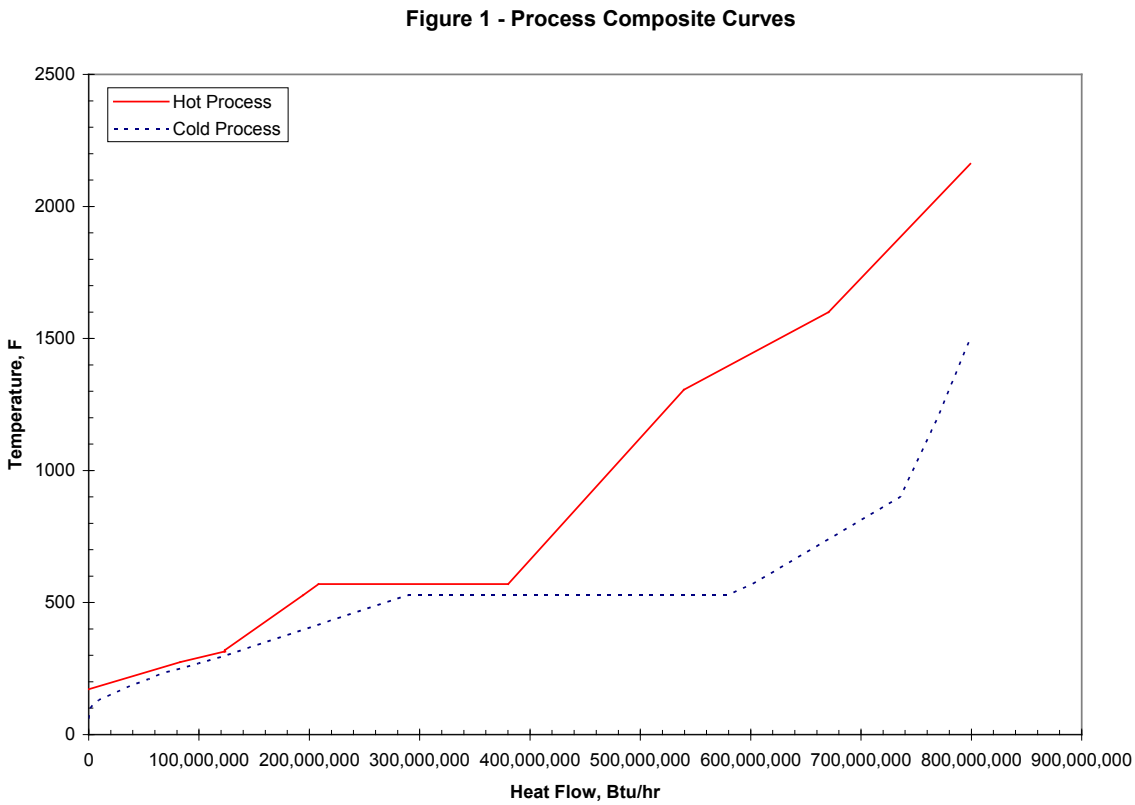

Figure H-1. Process hot and cold composite curves

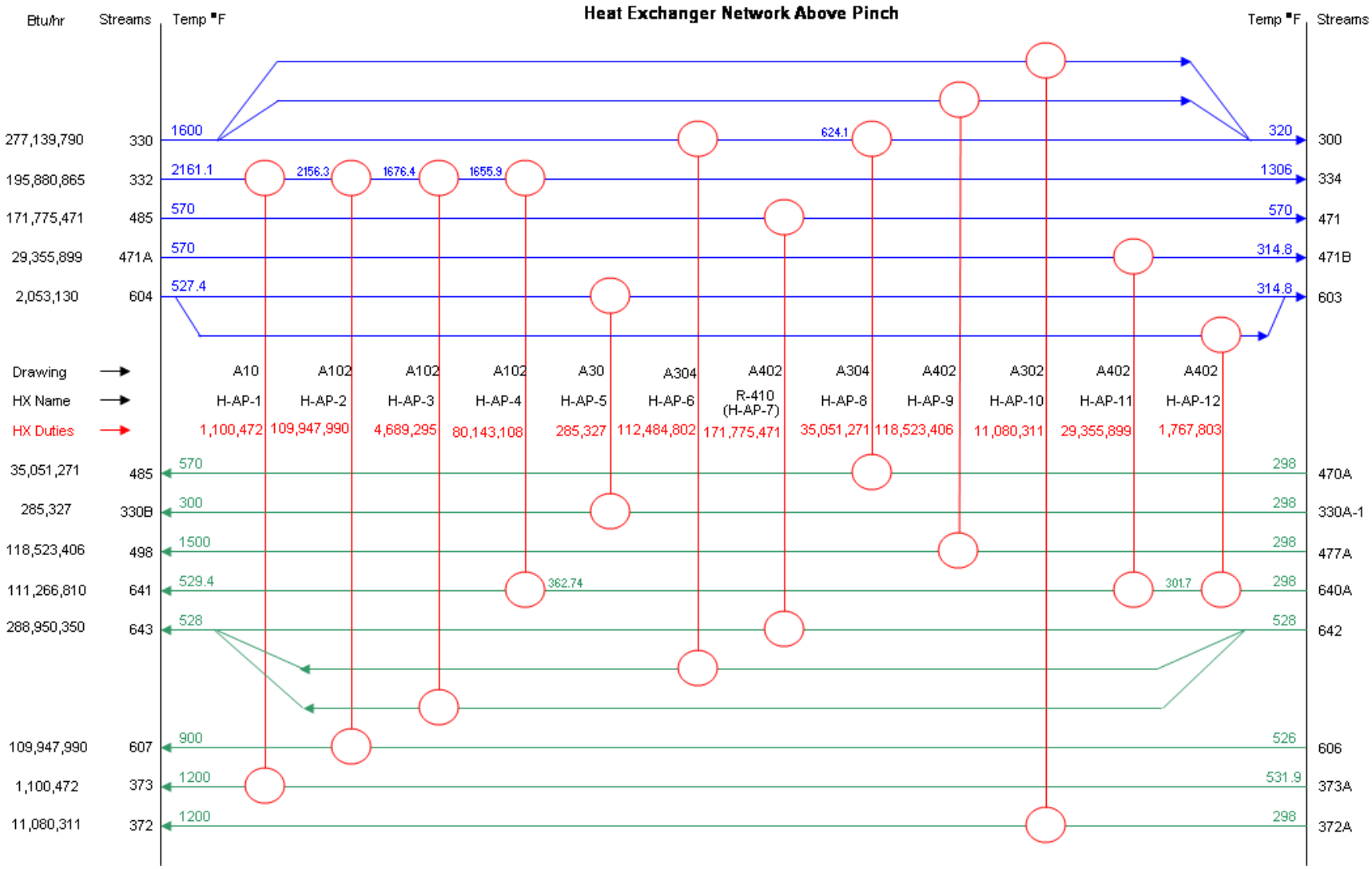

Figure H-2. Heat exchanger network above the pinch

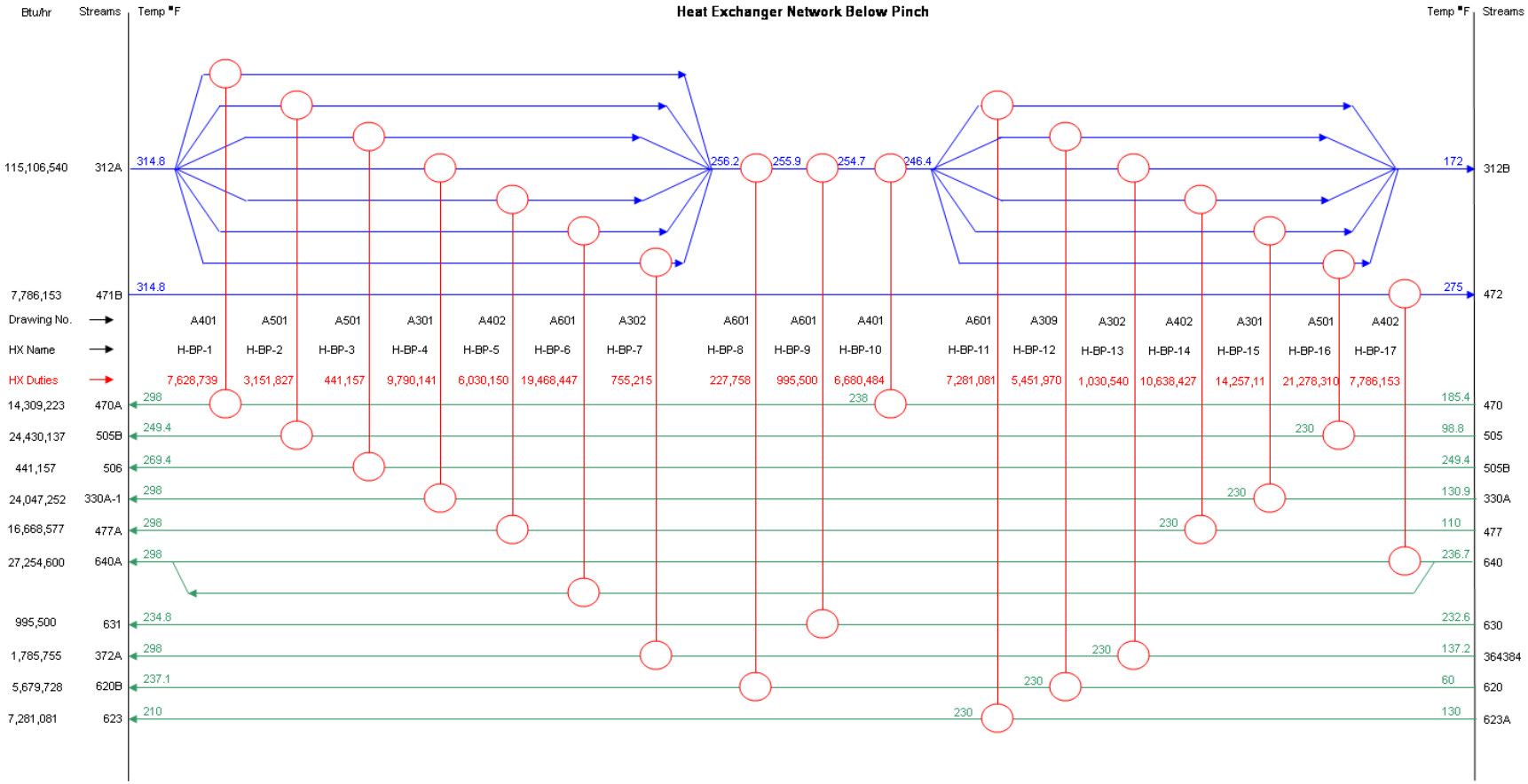

Figure H-3. Heat exchanger network below the pinch

Name	Description	Duty (Btu/hr)	LMTD (F)	Assumed Overall U (BTU/hr F)	Area (ft2)	Aspen IPE Cost (2006$)
H-BP-1	Hot Reformate /Cold AlcSynPreHt Exchanger	7,628,739	17.49	100	4361.6	$93,215
H-BP-2	Cold MolSievPreHt /Hot Reformate Exchanger	3,151,827	30.91	120	849.7	$28,415
H-BP-3	Cold MolSievPreHt /Hot Reformate Exchanger	441,157	20.33	100	217.0	$19,758
H-BP-4	Cold FCAirPreHt /Hot Reformate Exchanger	9,790,141	21.15	90	5142.5	$87,215
H-BP-5	Hot Reformate /Cold AlcSynUnRx Exchanger	6,030,150	21.15	100	2850.7	$71,315
H-BP-6	Hot Reformate /Cold Water Exchanger	19,468,447	18.12	150	7164.2	$163,847
H-BP-7	Cold RefBleedPreHt /Hot Reformate Exchanger	755,215	21.15	90	396.7	$24,050
H-BP-8	Cold Water /Hot Reformate Exchanger	227,758	22.33	150	68.0	$19,148
H-BP-9	Cold Water /Hot Reformate Exchanger	995,500	21.60	150	307.3	$20,850
H-BP-10	Hot Reformate /Cold AlcSynPreHt Exchanger	6,680,484	34.20	100	1953.6	$56,515
H-BP-11	Hot Reformate /Cold WaterRecy Exchanger	7,281,081	27.22	150	1783.1	$48,915
H-BP-12	Cold Water /Hot Reformate Exchanger	5,451,970	49.76	150	730.4	$26,115
H-BP-13	Cold RefBleedPreHt /Hot Reformate Exchanger	1,030,540	24.46	90	468.2	$24,315
H-BP-14	Hot Reformate /Cold AlcSynUnRx Exchanger	10,638,427	34.29	100	3102.5	$76,415
H-BP-15	Cold FCAirPreHt /Hot Reformate Exchanger	14,257,111	26.89	90	5892.2	$92,515
H-BP-16	Cold MolSievPreHt /Hot Reformate Exchanger	21,278,310	37.97	120	4670.0	$81,615
H-BP-17	Hot Alc.Rx.Exh. /Cold Water Exchanger	7,786,153	26.09	150	1989.6	$68,415
H-AP-1	Hot Flue gas /Cold AlcSepLtToRef Exchanger	1,100,472	1263.87	90	9.7	$23,723
H-AP-2	Hot Flue gas /Cold SteamSuperHt Exchanger	109,947,990	1202.57	90	1015.9	$103,115
H-AP-3	Hot Flue gas /Cold SteamGen Exchanger	4,689,295	1138.12	120	34.3	$24,123
H-AP-4	Hot Flue gas /Cold WaterPreHt Exchanger	80,143,108	1032.19	120	647.0	$72,115
H-AP-5	Cold FCAirPreHt /Hot WaterBlwdn Exchanger	285,327	80.83	100	35.3	$24,323
H-AP-6	Hot RefExhQuench /Cold SteamGen Exchanger	112,484,802	404.62	120	2316.7	$87,215
~~H-AP-7~~	~~Hot AlcSynReactExh /Cold SteamGen Exchanger~~	~~171,775,471~~	~~42.00~~	~~120~~	~~34082.4~~	~~$978,648~~
H-AP-8	Hot RefExhQuench /Cold AlcSynPreHt Exchanger	35,051,271	35.67	90	10916.9	$689,447
H-AP-9	Hot RefExhQuench /Cold AlcSynUnRxToRef Exchanger	118,523,406	51.51	90	25564.0	$3,265,799
H-AP-10	Hot RefExhQuench /Cold RefBleedPreHt Exchanger	11,080,311	130.33	90	944.7	$131,015
H-AP-11	Hot Alc.Rx.Exh. /Cold WaterPreHt Exchanger	29,355,899	70.32	120	3478.7	$114,315
H-AP-12	Hot WaterBlwdn /Cold WaterPreHt Exchanger	1,767,803	80.41	150	146.6	$20,958

*H-AP-7 cost is crossed out because it is included in the alcohol synthesis reactor cost

Figure H-4. Heat exchanger costs using Aspen Icarus Process Evaluator (IPE)

Appendix I

Results in 2007 Dollars with Updated Feedstock Costs

The results in the main report use a feedstock cost of $35/dry ton and 2005 dollar values. This is consistent with the indirect gasifier study[1] by Phillips et al. (2007) and allows for easy comparison with it. However, it is imperative that the results be updated to reflect recent changes in projected feedstock costs, which are now targeted to cost $50.70/dry ton in 2012[2] (Biomass Multi-Year Program Plan, to be published in 2009). Of the $50.70, $35.00 is the cost of getting the feedstock and $15.70 is for grower payment. The numbers presented here are in 2007 dollars.

The observations about the results shown are not repeated because the trends are similar to those in the main report. It is to be noted that the process related data remained unchanged and that the only differences are in the economics. The change in the labor cost index between 2005 and 2007 was negligible and the labor related data is not repeated.

Ethanol from Mixed Alcohols Production Process Engineering Analysis

2012 Market Target Case: 2010 Tar Reforming Goal & Mixed Alcohol Production
2,000 Dry Metric Tonnes Biomass per Day
GTI Gasifier, Tar Reformer, Sulfur Removal, MoS2 Catalyst, Fuel Purification, Steam-Power Cycle
All Values in 2007$

Minimum Ethanol Selling Price ($/gal) $1.95

EtOH Production at Operating Capacity (MM Gal / year)	50.4
EtOH Product Yield (gal / Dry US Ton Feedstock)	65.3
Mixed Alcohols Production at Operating Capacity (MM Gal / year)	59.3
Mixed Alcohols Product Yield (gal / Dry US Ton Feedstock)	76.8
Delivered Feedstock Cost $/Dry US Ton	$51
Internal Rate of Return (After-Tax)	10%
Equity Percent of Total Investment	100%

Capital Costs	
Feed Handling & Drying	$25,600,000
Gasification	$27,800,000
Tar Reforming & Quench	$48,500,000
Acid Gas & Sulfur Removal	$19,000,000
Alcohol Synthesis - Compression	$8,600,000
Alcohol Synthesis - Other	$14,200,000
Alcohol Separation	$7,400,000
Steam System & Power Generation	$22,000,000
Cooling Water & Other Utilities	$3,600,000
Air Separation Unit	$28,300,000
Total Installed Equipment Cost	$205,000,000
Indirect Costs	80,100,000
(% of TPI)	28.1%
Project Contingency	6,100,000
Total Project Investment (TPI)	$285,100,000
Installed Equipment Cost per Annual Gallon	$4.07
Total Project Investment per Annual Gallon	$5.66
Loan Rate	N/A
Term (years)	N/A
Capital Charge Factor	0.177
Maximum Yields based on carbon content	
Theoretical Ethanol Production (MM gal/yr)	158.9
Theoretical Ethanol Yield (gal/dry ton)	205.8
Current Ethanol Yield (Actual/Theoretical)	32%
Gasifier Efficiency - HHV %	79.7
Gasifier Efficiency - LHV %	78.2
Overall Plant Efficiency - HHV %	39.5
Overall Plant Efficiency - LHV %	38.4
Plant Hours per year	8406
%	96.0%

File name: ad20081116e-2007.xls, Date: May-10-2009

Operating Costs (cents/gal product)	
Feedstock	77.7
Natural Gas	0.0
Catalysts	0.4
Olivine	3.1
Other Raw Materials	3.5
Waste Disposal	3.3
Electricity	-4.0
Fixed Costs	31.4
Co-product credits	-20.8
Capital Depreciation	28.4
Average Income Tax	19.9
Average Return on Investment	51.8

Operating Costs ($/yr)	
Feedstock	$39,100,000
Natural Gas	$0
Catalysts	$200,000
Olivine	$1,600,000
Other Raw Matl. Costs	$200,000
Waste Disposal	$1,600,000
Electricity	-$2,000,000
Fixed Costs	$15,800,000
Co-product credits @ $1.15 per gal	-$10,500,000
Capital Depreciation	$14,300,000
Average Income Tax	$10,000,000
Average Return on Investment	$26,100,000
Total Plant Electricity Usage (KW)	7,136
Electricity Produced Onsite (KW)	10,994
Electricity Purchased from Grid (KW)	0
Electricity Sold to Grid (KW)	3,858
Steam Plant + Turboexpander Power Generated (hp)	38,784
Used for Main Compressors (hp)	24,041
Used for Electricity Generation (hp)	14,743
Plant Electricity Use (KWh/gal product)	1.6
Gasification & Reforming Steam Use (lb/gal)	19.1

Figure I-1. Techno-economic summary (in 2007$)

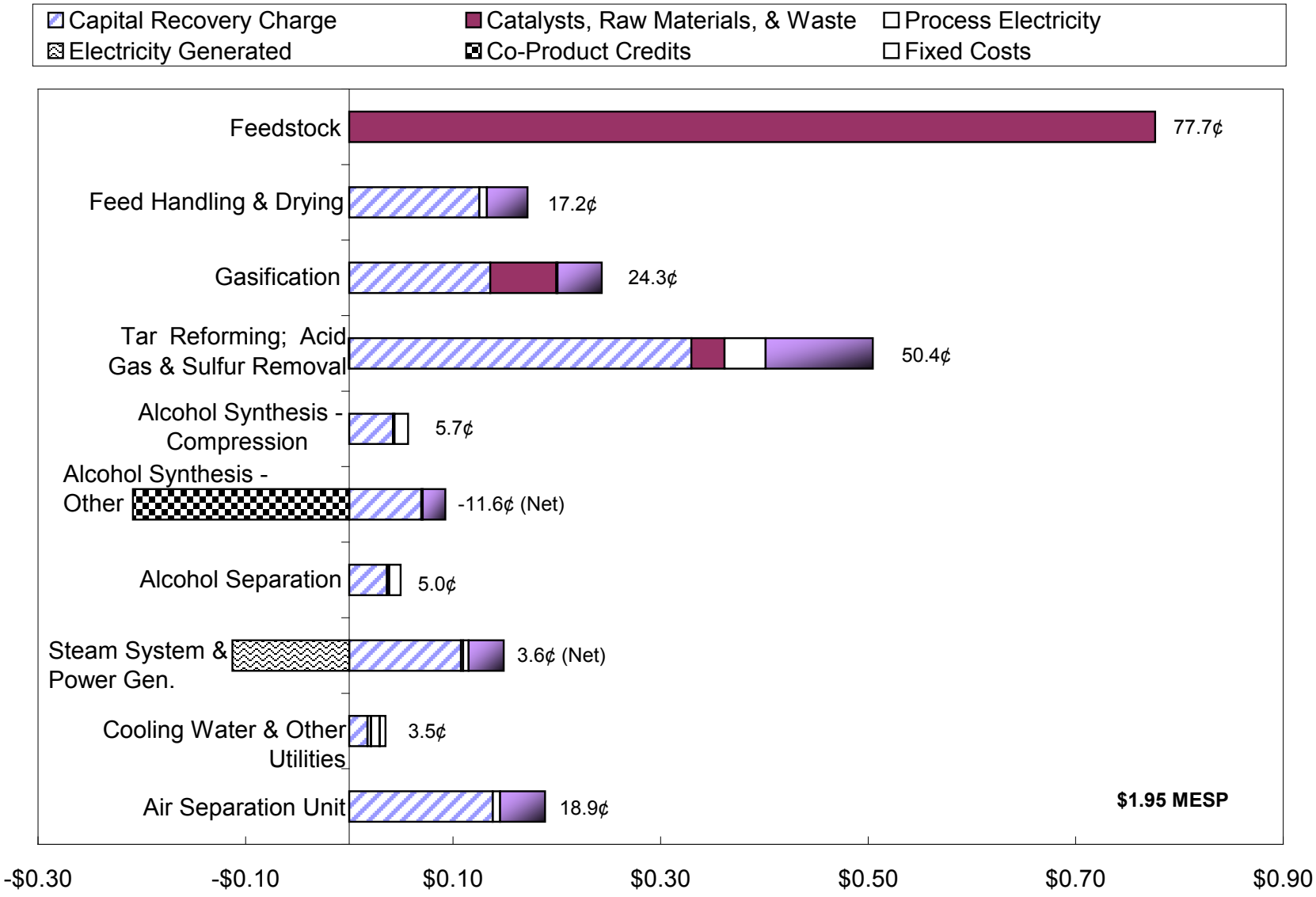

Figure I-2. Cost distribution details (in 2007$)

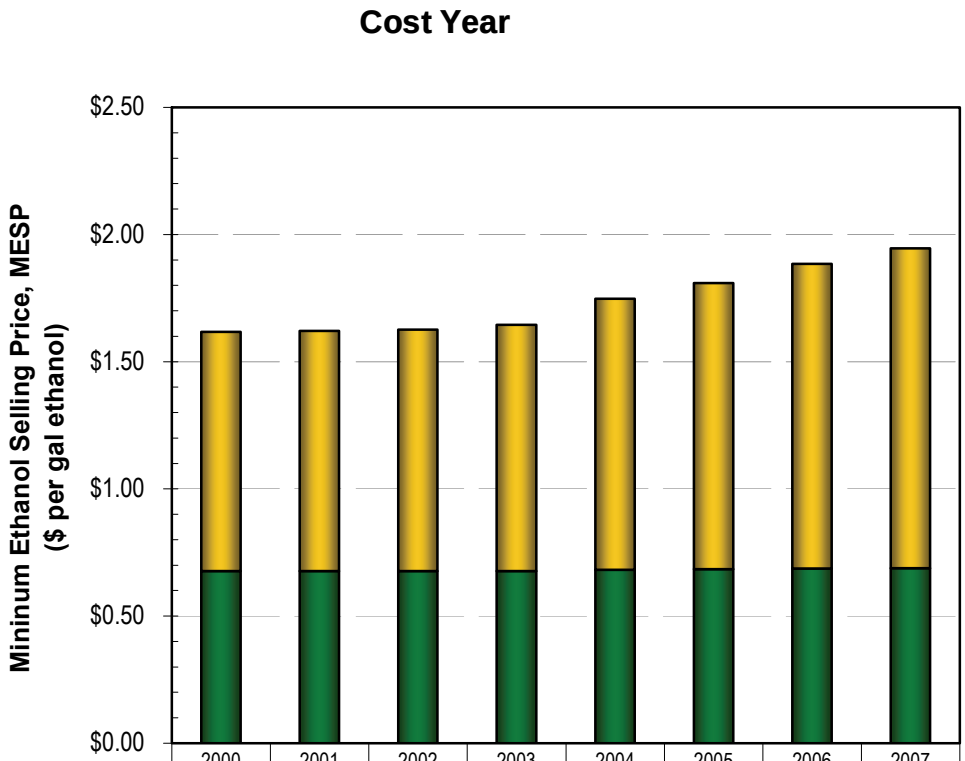

	2000	2001	2002	2003	2004	2005	2006	2007
Conversion Costs	$0.94	$0.94	$0.95	$0.97	$1.07	$1.13	$1.20	$1.26
Feedstock Contribution	$0.68	$0.68	$0.68	$0.68	$0.68	$0.68	$0.69	$0.69
Minimum Ethanol Selling Price ($/gal)	$1.62	$1.62	$1.63	$1.64	$1.75	$1.81	$1.88	$1.95

Figure I-3. Effect of cost year on MESP (2009 MYPP feedstock costs, 2007$)

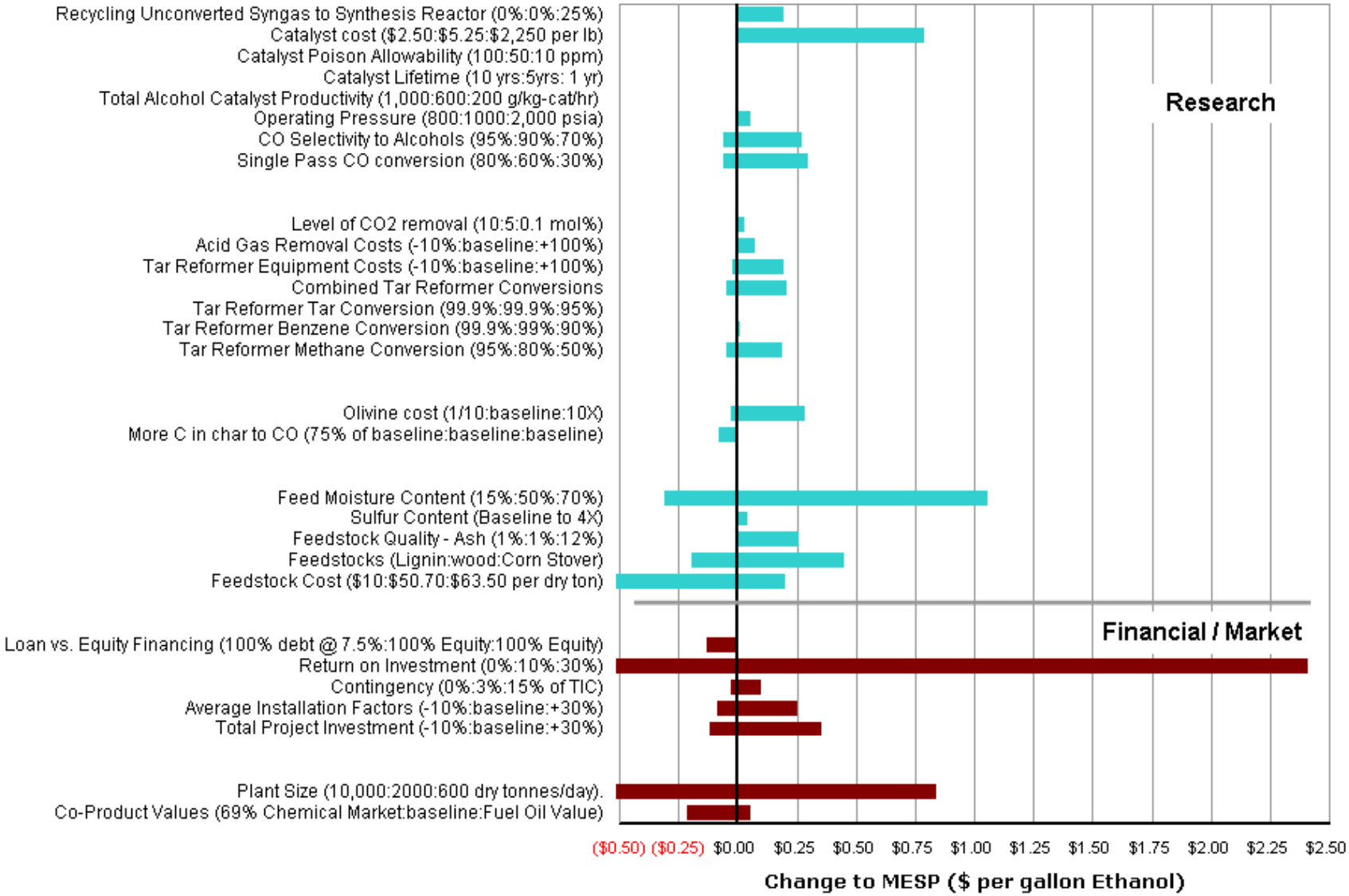

Figure I-4. Results of sensitivity analysis (2007$)

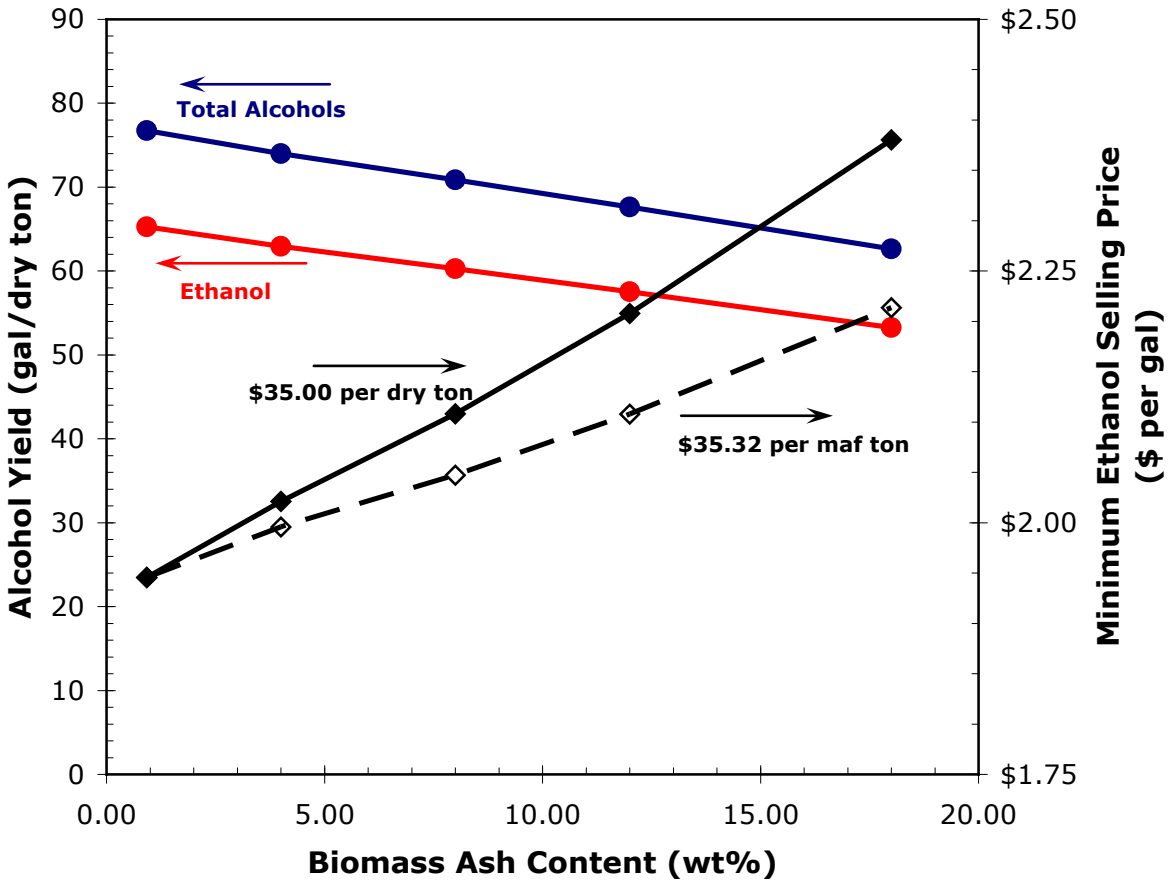

Figure I-5. Sensitivity analysis of biomass ash content (2007$)

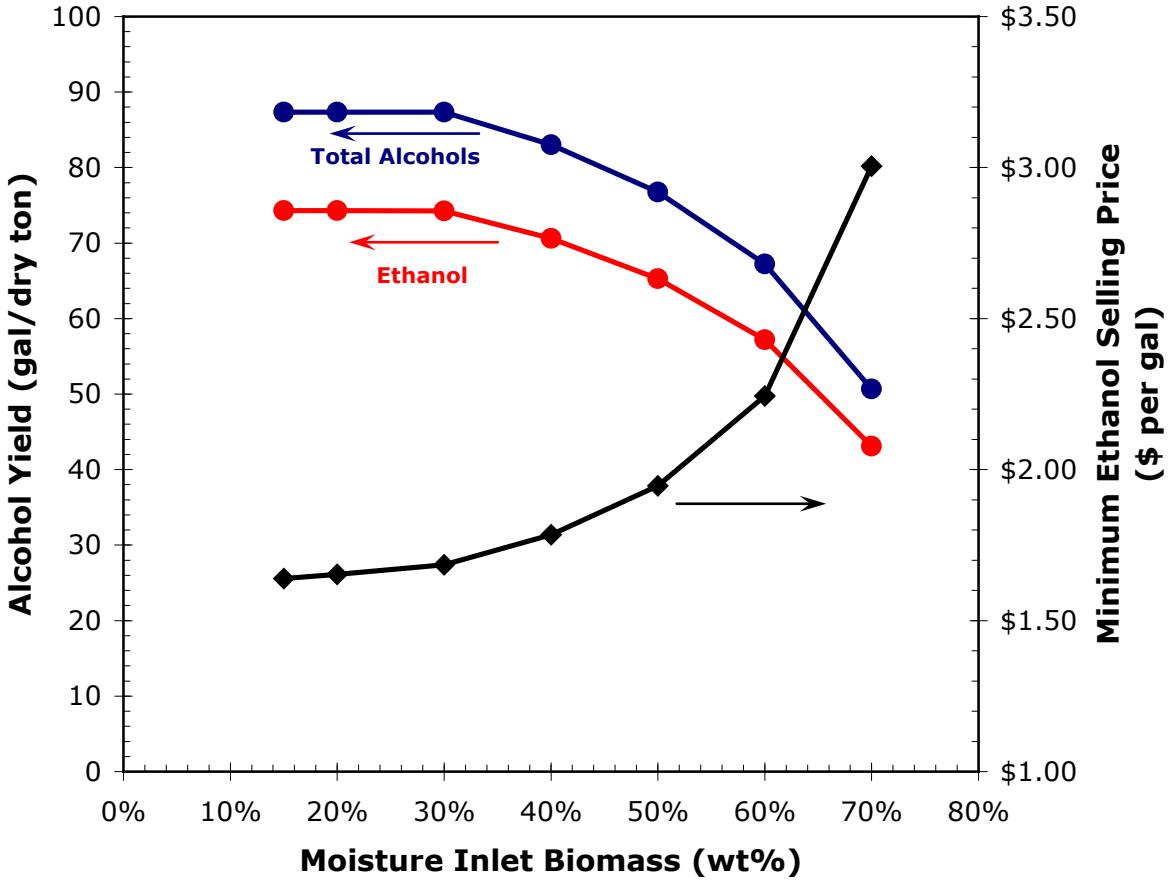

Figure I-6. Sensitivity analysis of biomass moisture content (2007$)

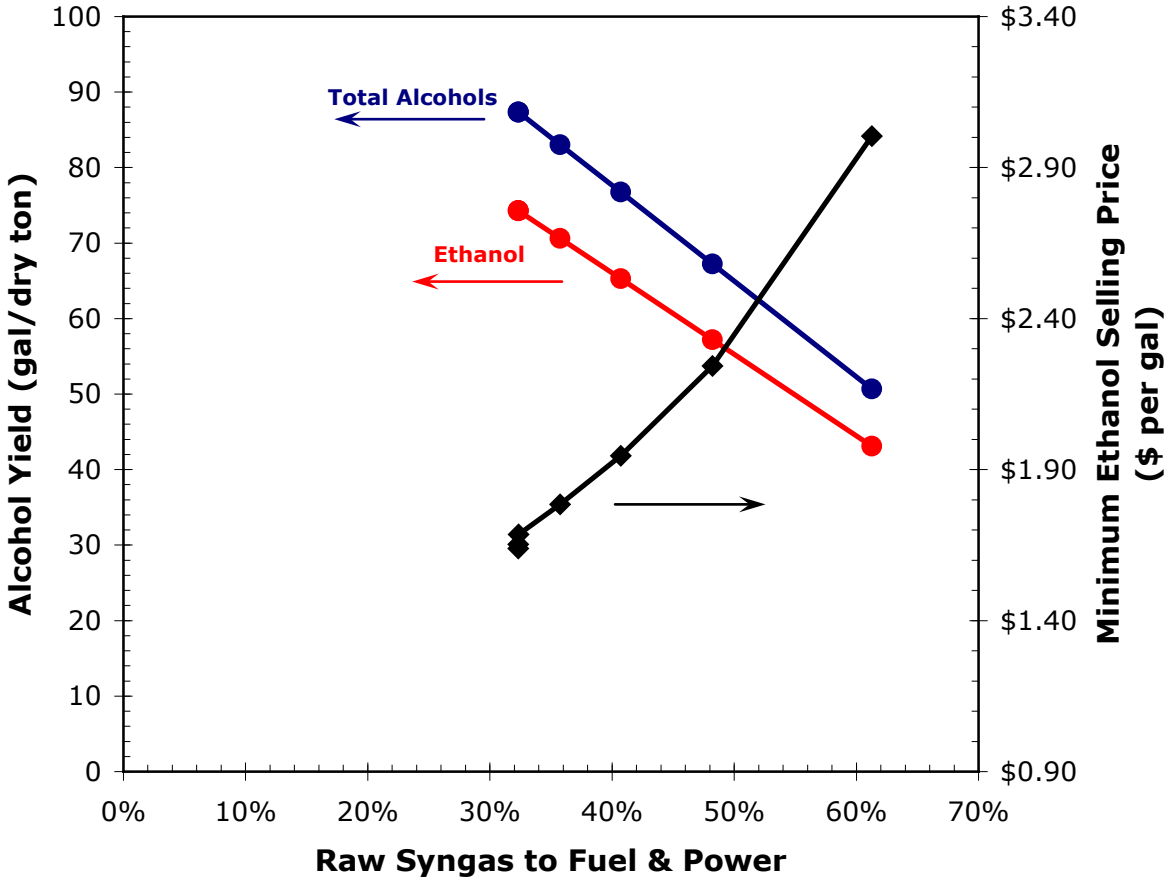

Figure I-7. Sensitivity analysis of raw syngas diverted to heat and power due to biomass moisture content (2007$)

References

[1]Phillips, S.; Aden, A.; Jechura, J.; Dayton, D.; Eggeman, T. *Thermochemical Ethanol via Indirect Gasification and Mixed Alcohol Synthesis of Lignocellulosic Biomass.* NREL/TP-510-41168. Golden, CO: National Renewable Energy Laboratory, April 2007. http://www.nrel.gov/docs/fy07osti/41168.pdf.

[2]Office of the Biomass Program. *Biomass Multi-Year Program Plan March 2008*. Washington, DC: Office of the Biomass Program, Energy Efficiency and Renewable Energy, U.S. Department of Energy, March 2008. New revision forthcoming in 2009. http://www1.eere.energy.gov/biomass/pdfs/biomass_program_mypp.pdf.

Appendix J

Comparison of Direct and Indirect Gasification Processes using 2005 and 2007 Assumptions

Ethanol from Mixed Alcohols Production Process Engineering Analysis

2012 Market Target Case: 2010 Tar Reforming Goal & Mixed Alcohol Production
2,000 Dry Metric Tonnes Biomass per Day
BCL Gasifier, Tar Reformer, Sulfur Removal, MoS2 Catalyst, Fuel Purification, Steam-Power Cycle
All Values in 2005$

Minimum Ethanol Selling Price ($/gal) $1.01

EtOH Production at Operating Capacity (MM Gal / year)	61.9
EtOH Product Yield (gal / Dry US Ton Feedstock)	80.1
Mixed Alcohols Production at Operating Capacity (MM Gal / year)	72.7
Mixed Alcohols Product Yield (gal / Dry US Ton Feedstock)	94.1
Delivered Feedstock Cost $/Dry US Ton	$35
Internal Rate of Return (After-Tax)	10%
Equity Percent of Total Investment	100%

Capital Costs	
Feed Handling & Drying	$23,200,000
Gasification	$12,900,000
Tar Reforming & Quench	$38,400,000
Acid Gas & Sulfur Removal	$14,500,000
Alcohol Synthesis - Compression	$16,000,000
Alcohol Synthesis - Other	$4,600,000
Alcohol Separation	$7,200,000
Steam System & Power Generation	$16,800,000
Cooling Water & Other Utilities	$3,600,000
Total Installed Equipment Cost	$137,200,000
Indirect Costs	53,600,000
(% of TPI)	28.1%
Project Contingency	4,100,000
Total Project Investment (TPI)	$190,900,000
Installed Equipment Cost per Annual Gallon	$2.22
Total Project Investment per Annual Gallon	$3.09
Loan Rate	N/A
Term (years)	N/A
Capital Charge Factor	0.181
Maximum Yields based on carbon content	
Theoretical Ethanol Production (MM gal/yr)	158.9
Theoretical Ethanol Yield (gal/dry ton)	205.8
Current Ethanol Yield (Actual/Theoretical)	39%
Gasifier Efficiency - HHV %	76.6
Gasifier Efficiency - LHV %	76.1
Overall Plant Efficiency - HHV %	47.4
Overall Plant Efficiency - LHV %	45.9
Plant Hours per year	8406
%	96.0%

Operating Costs (cents/gal product)	
Feedstock	43.7
Natural Gas	0.0
Catalysts	0.3
Olivine	0.7
Other Raw Materials	1.6
Waste Disposal	0.4
Electricity	0.0
Fixed Costs	19.5
Co-product credits	-20.8
Capital Depreciation	15.4
Average Income Tax	11.8
Average Return on Investment	28.6

Operating Costs ($/yr)	
Feedstock	$27,000,000
Natural Gas	$0
Catalysts	$200,000
Olivine	$400,000
Other Raw Matl. Costs	$300,000
Waste Disposal	$300,000
Electricity	$0
Fixed Costs	$12,100,000
Co-product credits @ $1.15 per gal	-$12,900,000
Capital Depreciation	$9,500,000
Average Income Tax	$7,300,000
Average Return on Investment	$17,700,000
Total Plant Electricity Usage (KW)	7,934
Electricity Produced Onsite (KW)	7,934
Electricity Purchased from Grid (KW)	1
Electricity Sold to Grid (KW)	0
Steam Plant + Turboexpander Power Generated (hp)	66,399
Used for Main Compressors (hp)	55,207
Used for Electricity Generation (hp)	11,192
Plant Electricity Use (KWh/gal product)	1.4
Gasification & Reforming Steam Use (lb/gal)	9.9

Figure J-1. Indirect gasification process cost summary using 2005 dollars and $35/dry ton feedstock cost

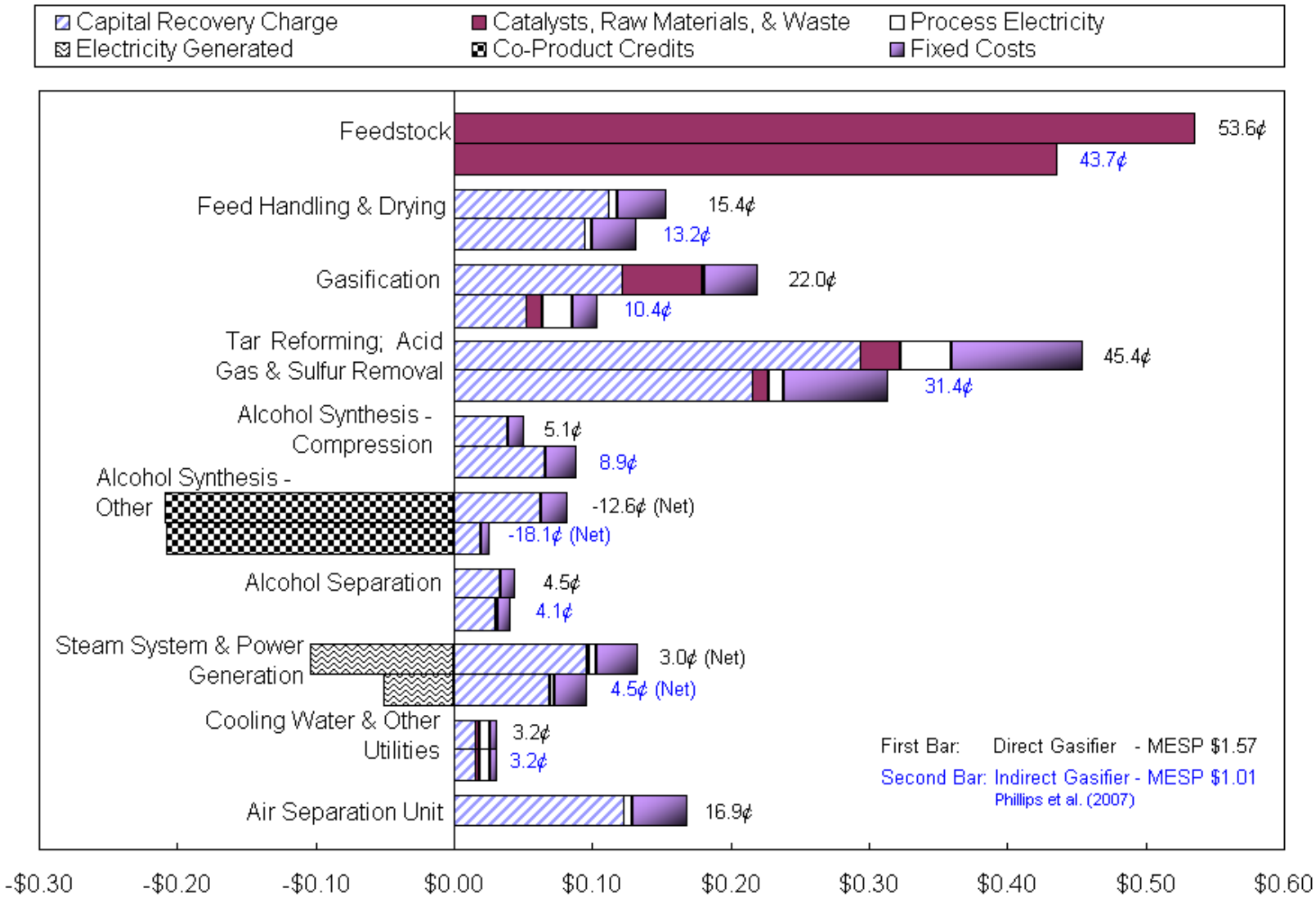

Figure J-2. Comparison of contributions to MESP for the base case in this report with the indirect gasifier report (Phillips et al. 2007) using 2005 dollars and $35/dry ton feedstock costs

Ethanol from Mixed Alcohols Production Process Engineering Analysis

2012 Market Target Case: 2010 Tar Reforming Goal & Mixed Alcohol Production
2,000 Dry Metric Tonnes Biomass per Day
BCL Gasifier, Tar Reformer, Sulfur Removal, MoS2 Catalyst, Fuel Purification, Steam-Power Cycle
All Values in 2007$

Minimum Ethanol Selling Price ($/gal) $1.29

EtOH Production at Operating Capacity (MM Gal / year)	61.9
EtOH Product Yield (gal / Dry US Ton Feedstock)	80.1
Mixed Alcohols Production at Operating Capacity (MM Gal / year)	72.7
Mixed Alcohols Product Yield (gal / Dry US Ton Feedstock)	94.1
Delivered Feedstock Cost $/Dry US Ton	$51
Internal Rate of Return (After-Tax)	10%
Equity Percent of Total Investment	100%

Capital Costs	
Feed Handling & Drying	$26,000,000
Gasification	$14,500,000
Tar Reforming & Quench	$43,100,000
Acid Gas & Sulfur Removal	$16,300,000
Alcohol Synthesis - Compression	$17,900,000
Alcohol Synthesis - Other	$5,200,000
Alcohol Separation	$8,100,000
Steam System & Power Generation	$18,800,000
Cooling Water & Other Utilities	$4,000,000
Total Installed Equipment Cost	$153,900,000
Indirect Costs	60,200,000
(% of TPI)	28.1%
Project Contingency	4,600,000
Total Project Investment (TPI)	$214,200,000
Installed Equipment Cost per Annual Gallon	$2.49
Total Project Investment per Annual Gallon	$3.46
Installed Equipment Cost per Annual Gallon Mixed Alcoh	$2.12
Loan Rate	N/A
Term (years)	N/A
Capital Charge Factor	0.181
Maximum Yields based on carbon content	
Theoretical Ethanol Production (MM gal/yr)	158.9
Theoretical Ethanol Yield (gal/dry ton)	205.8
Current Ethanol Yield (Actual/Theoretical)	39%
Gasifier Efficiency - HHV %	76.6
Gasifier Efficiency - LHV %	76.1
Overall Plant Efficiency - HHV %	47.4
Overall Plant Efficiency - LHV %	45.9
Plant Hours per year	8406
%	96.0%

Operating Costs (cents/gal product)	
Feedstock	63.3
Natural Gas	0.0
Catalysts	0.3
Olivine	0.7
Other Raw Materials	1.7
Waste Disposal	0.5
Electricity	0.0
Fixed Costs	21.0
Co-product credits	-20.8
Capital Depreciation	17.3
Average Income Tax	13.2
Average Return on Investment	32.2

Operating Costs ($/yr)	
Feedstock	$39,100,000
Natural Gas	$0
Catalysts	$200,000
Olivine	$500,000
Other Raw Matl. Costs	$300,000
Waste Disposal	$300,000
Electricity	$0
Fixed Costs	$13,000,000
Co-product credits @ $1.15 per gal	-$12,900,000
Capital Depreciation	$10,700,000
Average Income Tax	$8,200,000
Average Return on Investment	$19,900,000
Total Plant Electricity Usage (KW)	7,934
Electricity Produced Onsite (KW)	7,934
Electricity Purchased from Grid (KW)	1
Electricity Sold to Grid (KW)	0
Steam Plant + Turboexpander Power Generated (hp)	66,399
Used for Main Compressors (hp)	55,207
Used for Electricity Generation (hp)	11,192
Plant Electricity Use (KWh/gal product)	1.4
Gasification & Reforming Steam Use (lb/gal)	9.9

Figure J-3. Indirect gasification process cost summary using 2007 dollars and $50.70/dry ton feedstock cost

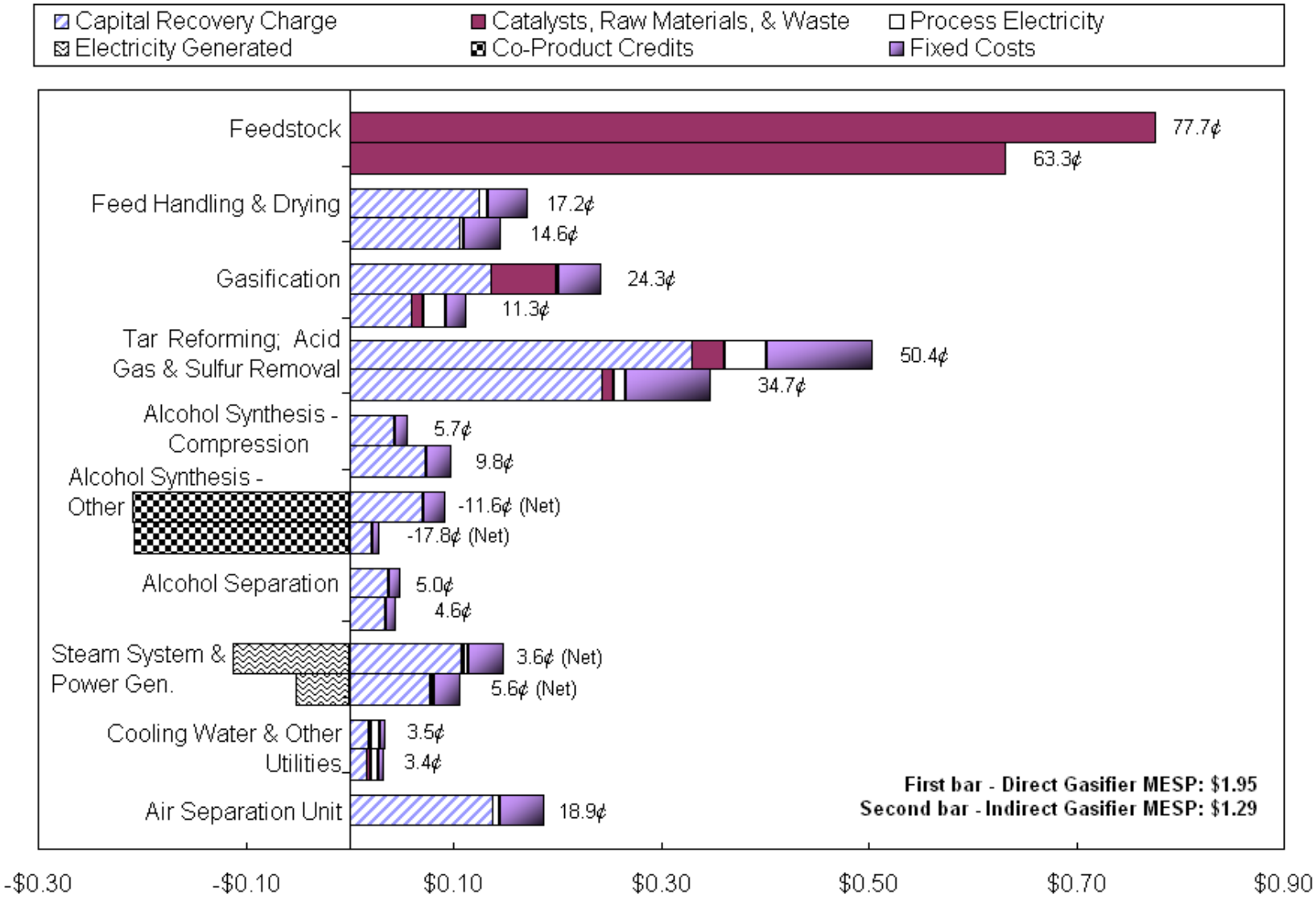

Figure J-4. Comparison of contributions to MESP for the base case in this report with the indirect gasifier report (Phillips et al. 2007) using 2007 dollars and $50.70/dry ton feedstock costs

Appendix K

Operating the Direct Gasifier at a Lower Pressure

This Appendix analyzes a case in which the GTI gasifier is simulated at 100 psi instead of at the more common operational pressure of around 400 psi. It is assumed that the capital cost of the gasifier and the tar reformer remained the same based on the mass flow into the gasifier. A detailed impact of the primary tradeoffs mentioned below was *not* factored in:

1. Lower pressure will result in higher cost because of a higher gasifier volume, which will require a bigger volume for the same mass throughput.
2. Lower pressure will result in lower cost because of the potential changes in the thickness of the materials used for construction.

This lower pressure scenario was not used as the base case for this report because it was less economical than the base case. This reinforces the reason why it is more common to operate the direct gasifier at the higher pressures (above 300 psi). Most of the data for the gasifier correlations in Evans et al.[1] are at that range.

There were four data points for the GTI gasifier at lower pressures available from the Evans et al. report, which clearly show a drop in the feed rate and illustrate point 1, above.

The existing logic in the FORTRAN routine (WDYD10) used to empirically predict the outlet composition had to be modified because it predicted oxygen breakthrough at the lower pressures. The predictions for CO were higher and for CO_2 were lower than the experimental data (four data points from the Evans et al. report: GT-10, T12-2, T12-4a, T12-4b). The code was modified to transfer CO to CO_2 to correct this and most importantly to fix the oxygen breakthrough prediction. These changes were made in a new version of the correlation for gasifier outputs (WDYD11).

The primary reason for studying this scenario was to see how far operating at a lower pressure could offset some of the negative economic impacts of the lower conversions in the tar reformer (at the higher pressures in the base case). The main tradeoff is between higher conversions (primarily of methane) in the tar reformer at lower pressures vs. higher compression costs. It costs less to bring solid biomass up to higher pressures than gasified biomass.

As with the other variations from the base case, a detailed pinch analysis was not done and the capital costs of heat exchangers were assumed to remain the same. The impact of variations in the heat exchanger costs on the MESP was on the order of 2¢ even when there was a big difference in the total costs, as mentioned in Section 2.11 of the main report.

Some equipment costs, such as those for the oxygen and nitrogen compressors, were reevaluated. However the reevaluation did not make any significant difference when compared with the scaled costs obtained from previously evaluated equipment.

A comparison of conversions assumed in the tar reformer in the base case (440 psi) and the lower pressure case (100 psi) is shown in the following table. These are based on maintaining the same percent approach to equilibrium as in the indirect gasification case (Phillips et al. 2007).[2]

Table K-1. Tar Reformer Conversions Used at Different Pressures

Compound	Target Conversion to CO & H_2 (Phillips et al. – gasifier at 25 psi)	Target Conversion to CO & H_2 (Lower pressure – gasifier at 100 psi)	Target Conversion to CO & H_2 (Base case – gasifier at 440 psi)
Methane (CH_4)	80%	72.6%	46.2%
Ethane (C_2H_6)	99%	90%	99%
Ethylene (C_2H_4)	90%	90%	90%
Tars (C_{10+})	99.9%	99.9%	99.9%
Benzene (C_6H_6)	99%	99%	99%
Ammonia (NH_3)	90%	86.6%	78%

As mentioned in the main report, methane conversion has the greatest economic impact. Some of the other conversions also changed. They are not reflected in the preceding table because their flow rates were too low to affect the overall economics significantly.

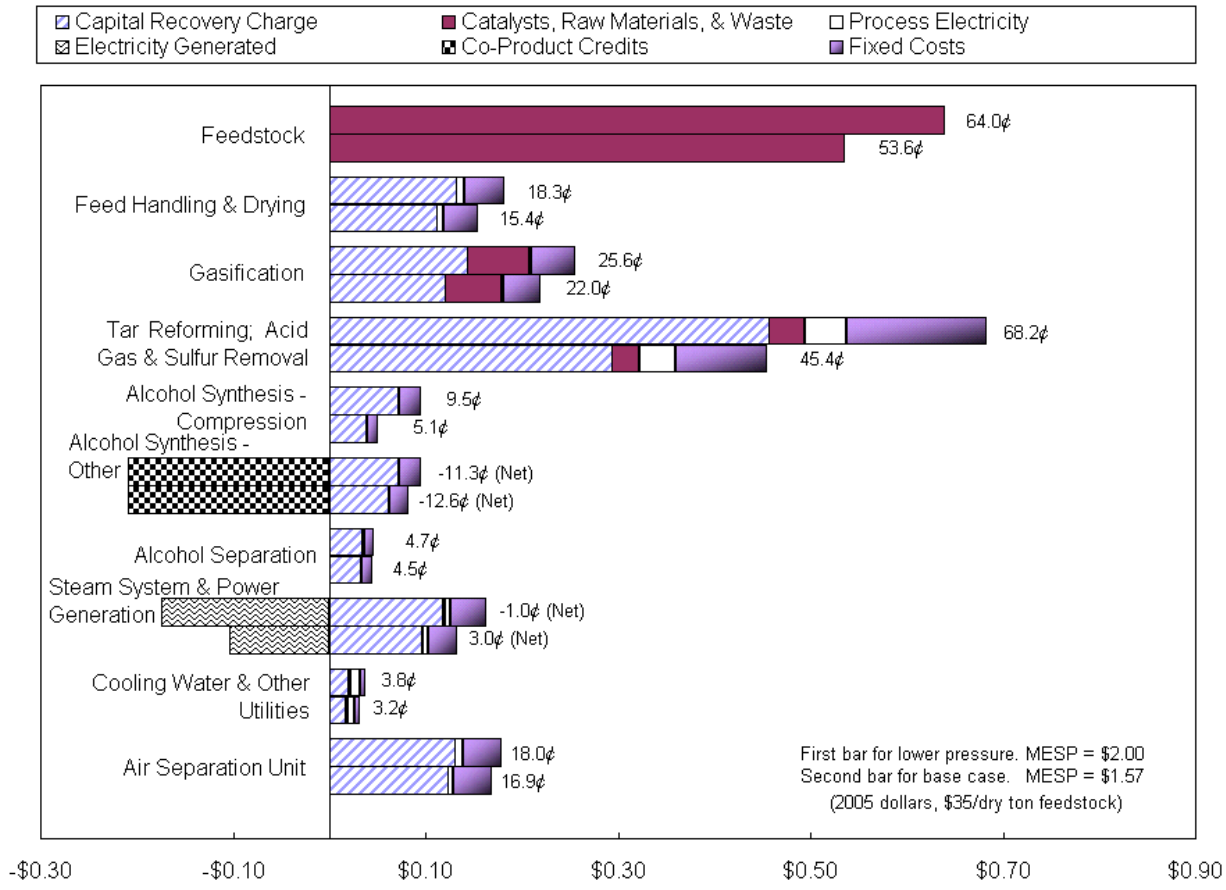

Figure K-1. Comparison of cost distribution for process with gasifier at 100 psi vs. the base case operated at 440 psi

Note that the capital recovery charges are per gallon. The capital costs for the "Feed Handling and Drying" and some others are identical for the two cases, but the cost per gallon is higher because the gallons of ethanol per dry ton yield is lower at 54.7 vs. 65.3 in the base case. The biggest cost increase is in the "Tar Reforming; Acid Gas & Sulfur Removal" section because of the added syngas compressor. The savings from using a smaller oxygen compressor is insignificant compared with the compressor required for the syngas. Overall energy requirements are also higher because of added energy requirements for compression. The biggest impact of higher energy requirements is the diversion of syngas to drive compressors rather than to make liquid fuels. The cost comparison indicates that the gains from higher methane conversion possible at lower pressures (100 psi) are more than offset by added compression costs.

References

[1]Evans, R.J.; Knight, R.A.; Onischak, N.; Babu, S.P. *Development of Biomass Gasification to Produce Substitute Fuels*. PNL-6518. Work performed by the Institute of Gas Technology for Pacific Northwest Laboratory under contract DE-AC06-76RLO 1830 with the U.S. Department of Energy. Richland, WA: Pacific Northwest Laboratory, March 1988.

[2]Phillips, S.; Aden, A.; Jechura, J.; Dayton, D.; Eggeman, T. *Thermochemical Ethanol via Indirect Gasification and Mixed Alcohol Synthesis of Lignocellulosic Biomass.* NREL/TP-510-41168. Golden, CO: National Renewable Energy Laboratory, April 2007. http://www.nrel.gov/docs/fy07osti/41168.pdf.

Appendix L

Hypothetical Case if Tar Reformer Conversions are not affected by Higher Pressures

This section considers a hypothetical case if tar reformer conversions were not adversely affected by higher pressures and the tar reformer conversions in the Phillips et al. (2007) report were achievable in the high pressure case. This case will help delineate the economic impacts of the tar reformer conversions from the other factors that impact the MESP. A list of the factors that affect the MESP is shown in the "Conclusions" section of the main report. This section shows that the target MESP of $1.07/gallon is not achievable even with higher conversions in the tar reformer. The MESP for this case is $1.30/gallon (the MESP for the base case of the main report is $1.57/gallon). This means the negative impact of lower conversion in the tar reformer (at the higher pressures) on the MESP is about 27¢/gallon.

Ethanol from Mixed Alcohols Production Process Engineering Analysis

2012 Market Target Case: 2010 Tar Reforming Goal & Mixed Alcohol Production
2,000 Dry Metric Tonnes Biomass per Day
GTI Gasifier, Tar Reformer, Sulfur Removal, MoS2 Catalyst, Fuel Purification, Steam-Power Cycle
All Values in 2005$

Minimum Ethanol Selling Price ($/gal) $1.30

EtOH Production at Operating Capacity (MM Gal / year)	59.2
EtOH Product Yield (gal / Dry US Ton Feedstock)	76.7
Mixed Alcohols Production at Operating Capacity (MM Gal / year)	69.6
Mixed Alcohols Product Yield (gal / Dry US Ton Feedstock)	90.1
Delivered Feedstock Cost $/Dry US Ton	$35
Internal Rate of Return (After-Tax)	10%
Equity Percent of Total Investment	100%

Capital Costs	
Feed Handling & Drying	$22,700,000
Gasification	$24,800,000
Tar Reforming & Quench	$41,600,000
Acid Gas & Sulfur Removal	$16,700,000
Alcohol Synthesis - Compression	$8,100,000
Alcohol Synthesis - Other	$12,800,000
Alcohol Separation	$7,400,000
Steam System & Power Generation	$16,000,000
Cooling Water & Other Utilities	$3,100,000
Air Separation Unit	$25,200,000
Total Installed Equipment Cost	$178,400,000
Indirect Costs	69,700,000
(% of TPI)	28.1%
Project Contingency	5,400,000
Total Project Investment (TPI)	$248,200,000
Installed Equipment Cost per Annual Gallon	$3.01
Total Project Investment per Annual Gallon	$4.19
Loan Rate	N/A
Term (years)	N/A
Capital Charge Factor	0.176
Maximum Yields based on carbon content	
Theoretical Ethanol Production (MM gal/yr)	158.9
Theoretical Ethanol Yield (gal/dry ton)	205.8
Current Ethanol Yield (Actual/Theoretical)	37%
Gasifier Efficiency - HHV %	79.7
Gasifier Efficiency - LHV %	78.2
Overall Plant Efficiency - HHV %	46.0
Overall Plant Efficiency - LHV %	44.6
Plant Hours per year	8406
%	96.0%

Operating Costs (cents/gal product)	
Feedstock	45.6
Natural Gas	0.0
Catalysts	0.3
Olivine	2.4
Other Raw Materials	2.0
Waste Disposal	2.6
Electricity	-0.8
Fixed Costs	24.2
Co-product credits	-20.8
Capital Depreciation	20.9
Average Income Tax	14.6
Average Return on Investment	38.4

Operating Costs ($/yr)	
Feedstock	$27,000,000
Natural Gas	$0
Catalysts	$200,000
Olivine	$1,400,000
Other Raw Matl. Costs	$200,000
Waste Disposal	$1,500,000
Electricity	-$500,000
Fixed Costs	$14,400,000
Co-product credits @ $1.15 per gal	-$12,300,000
Capital Depreciation	$12,400,000
Average Income Tax	$8,700,000
Average Return on Investment	$22,700,000
Total Plant Electricity Usage (KW)	6,497
Electricity Produced Onsite (KW)	7,472
Electricity Purchased from Grid (KW)	0
Electricity Sold to Grid (KW)	975
Steam Plant + Turboexpander Power Generated (hp)	32,851
Used for Main Compressors (hp)	22,767
Used for Electricity Generation (hp)	10,084
Plant Electricity Use (KWh/gal product)	1.2
Gasification & Reforming Steam Use (lb/gal)	13.0

REPORT DOCUMENTATION PAGE

Form Approved
OMB No. 0704-0188

The public reporting burden for this collection of information is estimated to average 1 hour per response, including the time for reviewing instructions, searching existing data sources, gathering and maintaining the data needed, and completing and reviewing the collection of information. Send comments regarding this burden estimate or any other aspect of this collection of information, including suggestions for reducing the burden, to Department of Defense, Executive Services and Communications Directorate (0704-0188). Respondents should be aware that notwithstanding any other provision of law, no person shall be subject to any penalty for failing to comply with a collection of information if it does not display a currently valid OMB control number.
PLEASE DO NOT RETURN YOUR FORM TO THE ABOVE ORGANIZATION.

1. REPORT DATE *(DD-MM-YYYY)*
July 2009

2. REPORT TYPE
Technical Report

3. DATES COVERED *(From - To)*

4. TITLE AND SUBTITLE
Thermochemical Ethanol via Direct Gasification and Mixed Alcohol Synthesis of Lignocellulosic Biomass

5a. CONTRACT NUMBER
DE-AC36-08-GO28308

5b. GRANT NUMBER

5c. PROGRAM ELEMENT NUMBER

6. AUTHOR(S)
A. Dutta and S.D. Phillips

5d. PROJECT NUMBER
NREL/TP-510-45913

5e. TASK NUMBER
BB07.3710

5f. WORK UNIT NUMBER

7. PERFORMING ORGANIZATION NAME(S) AND ADDRESS(ES)
National Renewable Energy Laboratory
1617 Cole Blvd.
Golden, CO 80401-3393

8. PERFORMING ORGANIZATION REPORT NUMBER
NREL/TP-510-45913

9. SPONSORING/MONITORING AGENCY NAME(S) AND ADDRESS(ES)

10. SPONSOR/MONITOR'S ACRONYM(S)
NREL

11. SPONSORING/MONITORING AGENCY REPORT NUMBER

12. DISTRIBUTION AVAILABILITY STATEMENT
National Technical Information Service
U.S. Department of Commerce
5285 Port Royal Road
Springfield, VA 22161

13. SUPPLEMENTARY NOTES

14. ABSTRACT *(Maximum 200 Words)*
This work continues the study of thermochemical conversion processes for biomass to ethanol. An earlier study by Phillips et al. (NREL/TP-510-41168) looked into a process that used an indirect gasifier and showed that the process is capable of producing cost-competitive cellulosic ethanol below the $1.07 per gallon minimum plant gate price targeted in 2012 using 2005 cost assumptions. A high-pressure oxygen-blown direct gasifier is used in this study. The conversion costs for this process are higher than the 2012 cost target. This is primarily because of two reasons, 1) Extra capital cost of an air-separation unit, and 2) Lower conversion of methane to syngas after reformation at the higher pressures in this process. The minimum ethanol selling price (MESP) for the base case process was $1.57/gallon using 2005 cost assumptions, compared with $1.01/ gallon in the indirect gasification process. The MESP was $1.95/gallon using 2007 cost assumptions and 2012 performance targets (compared with $1.29/gallon for the indirect process).

15. SUBJECT TERMS
Thermochemical; gasification; direct gasifier; biomass; MESP; ethanol; technoeconomic; syngas

16. SECURITY CLASSIFICATION OF:			17. LIMITATION OF ABSTRACT	18. NUMBER OF PAGES	19a. NAME OF RESPONSIBLE PERSON
a. REPORT	b. ABSTRACT	c. THIS PAGE			19b. TELEPHONE NUMBER (*Include area code*)
Unclassified	Unclassified	Unclassified	UL		

Standard Form 298 (Rev. 8/98)
Prescribed by ANSI Std. Z39.18

F1147-E(10/2008)